Appendix A: Traffic Count Information in the Study Corridor

SW 152nd Street & Old Cutler Road

File Name : SW 152nd Street & Old Cutler Road
Site Code : 00000000
Start Date : 5/26/2016
Page No : 1

Groups Printed- Trucks

	Old Cutler Road Southbound					Old Cutler Road Northbound					SW 152nd Street Westbound					SW 152nd Street Eastbound					
Start Time	Left	Thru	RIght	Bikes	App. Total	Left	Thru	RIght	Bikes	App. Total	Left	Thru	RIght	Bikes	App. Total	Left	Thru	RIght	Bikes	App. Total	Int. Total
07:00 AM	0	1	1	0	2	0	5	4	0	9	0	0	0	0	0	1	3	1	0	5	16
07:15 AM	1	8	0	1	10	1	6	0	0	7	2	3	0	1	6	0	0	1	0	1	24
07:30 AM	0	1	0	0	1	0	7	0	0	7	0	0	0	1	1	2	0	0	0	2	11
07:45 AM	0	2	0	0	2	1	6	0	0	7	1	1	0	3	5	2	1	2	0	5	19
Total	1	12	1	1	15	2	24	4	0	30	3	4	0	5	12	5	4	4	0	13	70
08:00 AM	1	1	1	0	3	0	4	0	0	4	0	0	0	3	3	0	0	1	0	1	11
08:15 AM	0	0	2	0	2	0	3	0	0	3	0	0	0	3	3	0	1	1	0	2	10
08:30 AM	0	1	1	0	2	1	6	2	0	9	1	0	0	1	2	0	2	2	0	4	17
08:45 AM	0	2	1	0	3	0	8	0	0	8	0	0	0	0	0	2	2	1	0	5	16
Total	1	4	5	0	10	1	21	2	0	24	1	0	0	7	8	2	5	5	0	12	54
*** BREAK ***																					
11:00 AM	0	6	0	0	6	0	1	0	2	3	1	1	0	1	3	3	3	0	0	6	18
11:15 AM	0	2	0	0	2	0	1	0	2	3	0	0	0	4	4	0	4	0	0	4	13
11:30 AM	0	4	2	0	6	2	4	0	0	6	1	1	0	0	2	1	1	0	0	2	16
11:45 AM	1	5	1	0	7	0	4	0	0	4	1	3	1	2	7	3	0	0	0	3	21
Total	1	17	3	0	21	2	10	0	4	16	3	5	1	7	16	7	8	0	0	15	68
12:00 PM	0	1	2	0	3	1	3	0	0	4	0	0	0	1	1	1	0	0	0	1	9
12:15 PM	0	4	1	0	5	0	4	1	0	5	0	0	2	1	3	1	0	1	0	2	15
12:30 PM	0	3	0	1	4	0	2	0	0	2	0	0	0	4	4	1	0	0	0	1	11
12:45 PM	0	6	0	0	6	1	2	0	0	3	0	0	0	4	4	3	0	2	0	5	18
Total	0	14	3	1	18	2	11	1	0	14	0	0	2	10	12	6	0	3	0	9	53
*** BREAK ***																					
04:00 PM	0	8	3	0	11	2	2	0	1	5	0	0	0	1	1	0	0	0	0	0	17
04:15 PM	0	7	2	0	9	0	1	0	0	1	0	1	0	0	1	1	0	1	0	2	13
04:30 PM	0	5	0	0	5	0	1	0	1	2	0	0	0	5	5	0	1	0	0	1	13
04:45 PM	0	5	1	0	6	1	1	0	0	2	1	0	0	2	3	0	0	0	0	0	11
Total	0	25	6	0	31	3	5	0	2	10	1	1	0	8	10	1	1	1	0	3	54
05:00 PM	0	5	2	0	7	0	0	0	0	0	0	0	0	2	2	2	3	0	0	5	14
05:15 PM	0	1	0	0	1	0	1	0	0	1	0	1	0	1	2	1	0	0	0	1	5
05:30 PM	0	2	1	0	3	0	0	0	1	1	0	2	0	3	5	1	1	0	0	2	11
05:45 PM	0	4	0	0	4	0	1	0	0	1	0	1	0	2	3	0	0	1	0	1	9
Total	0	12	3	0	15	0	2	0	1	3	0	4	0	8	12	4	4	1	0	9	39
Grand Total	3	84	21	2	110	10	73	7	7	97	8	14	3	45	70	25	22	14	0	61	338
Apprch %	2.7	76.4	19.1	1.8		10.3	75.3	7.2	7.2		11.4	20	4.3	64.3		41	36.1	23	0		
Total %	0.9	24.9	6.2	0.6	32.5	3	21.6	2.1	2.1	28.7	2.4	4.1	0.9	13.3	20.7	7.4	6.5	4.1	0	18	

SW 152nd Street & Old Cutler Road

File Name : SW 152nd Street & Old Cutler Road
Site Code : 00000000
Start Date : 5/26/2016
Page No : 2

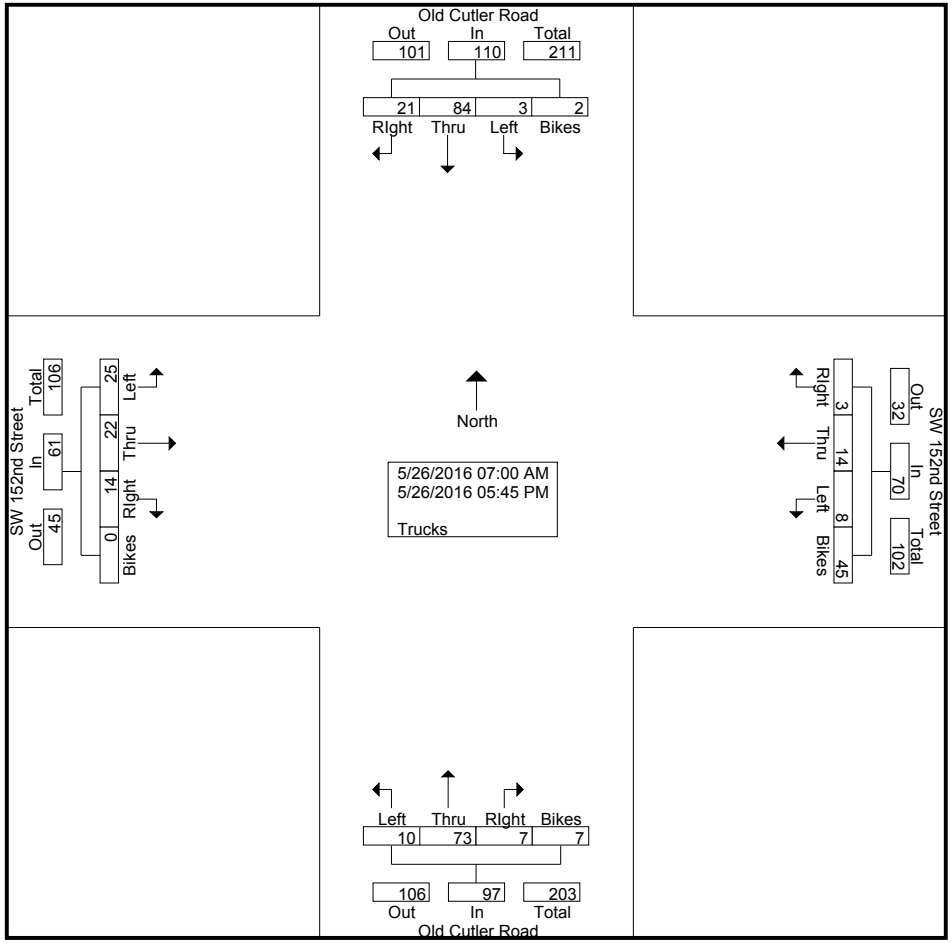

SW 152nd Street & Old Cutler Road

File Name : SW 152nd Street & Old Cutler Road
Site Code : 00000000
Start Date : 5/26/2016
Page No : 3

	Old Cutler Road Southbound					Old Cutler Road Northbound					SW 152nd Street Westbound					SW 152nd Street Eastbound					
Start Time	Left	Thru	RIght	Bikes	App. Total	Left	Thru	RIght	Bikes	App. Total	Left	Thru	RIght	Bikes	App. Total	Left	Thru	RIght	Bikes	App. Total	Int. Total
Peak Hour Analysis From 07:00 AM to 08:45 AM - Peak 1 of 1																					
Peak Hour for Entire Intersection Begins at 07:00 AM																					
07:00 AM	0	1	**1**	0	2	0	5	**4**	0	**9**	0	0	0	0	0	1	**3**	1	0	**5**	16
07:15 AM	**1**	**8**	0	**1**	**10**	**1**	6	0	0	7	**2**	**3**	0	1	**6**	0	0	1	0	1	**24**
07:30 AM	0	1	0	0	1	0	**7**	0	0	7	0	0	0	1	1	**2**	0	0	0	2	11
07:45 AM	0	2	0	0	2	1	6	0	0	7	1	1	0	**3**	5	2	1	**2**	0	5	19
Total Volume	1	12	1	1	15	2	24	4	0	30	3	4	0	5	12	5	4	4	0	13	70
% App. Total	6.7	80	6.7	6.7		6.7	80	13.3	0		25	33.3	0	41.7		38.5	30.8	30.8	0		
PHF	.250	.375	.250	.250	.375	.500	.857	.250	.000	.833	.375	.333	.000	.417	.500	.625	.333	.500	.000	.650	.729

SW 152nd Street & Old Cutler Road

File Name : SW 152nd Street & Old Cutler Road
Site Code : 00000000
Start Date : 5/26/2016
Page No : 4

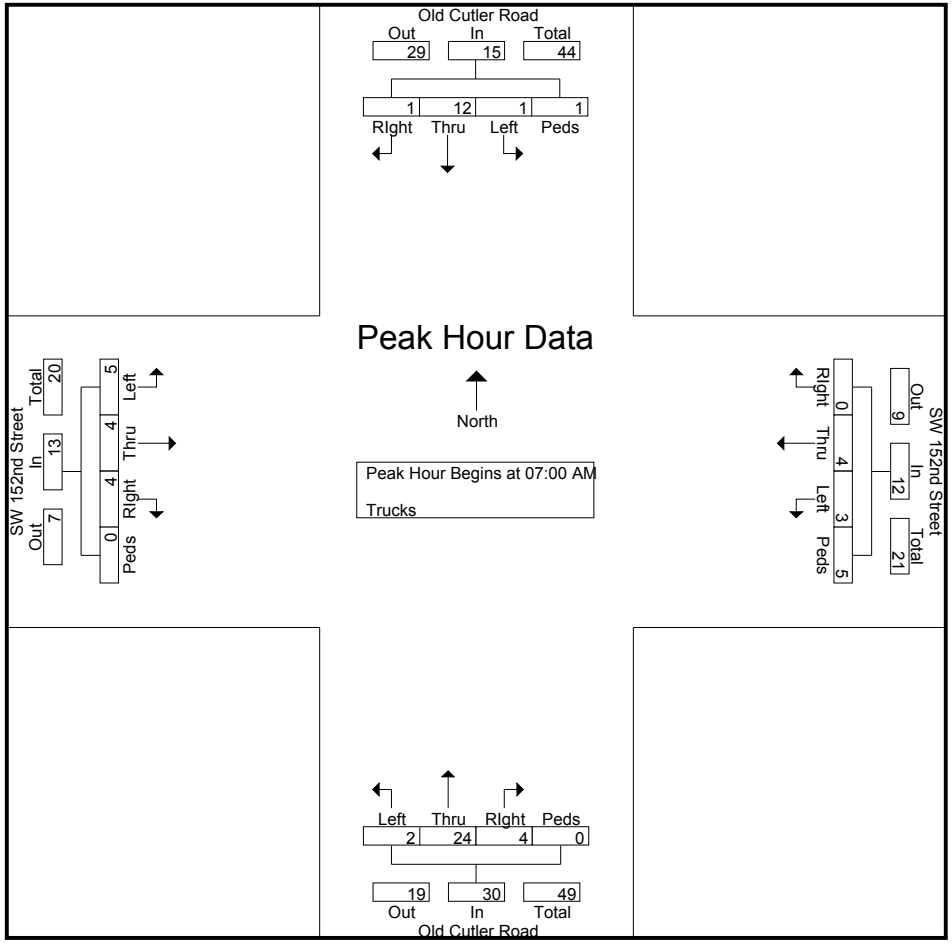

SW 152nd Street & Old Cutler Road

File Name : SW 152nd Street & Old Cutler Road
Site Code : 00000000
Start Date : 5/26/2016
Page No : 5

	Old Cutler Road Southbound					Old Cutler Road Northbound					SW 152nd Street Westbound					SW 152nd Street Eastbound					
Start Time	Left	Thru	RIght	Bikes	App. Total	Left	Thru	RIght	Bikes	App. Total	Left	Thru	RIght	Bikes	App. Total	Left	Thru	RIght	Bikes	App. Total	Int. Total
Peak Hour Analysis From 11:00 AM to 12:45 PM - Peak 1 of 1																					
Peak Hour for Entire Intersection Begins at 11:00 AM																					
11:00 AM	0	**6**	0	0	6	0	1	0	**2**	3	**1**	1	0	1	3	**3**	3	0	0	**6**	18
11:15 AM	0	2	0	0	2	0	1	0	2	3	0	0	0	**4**	4	0	**4**	0	0	4	13
11:30 AM	0	4	**2**	0	6	**2**	**4**	0	0	**6**	1	1	0	0	2	1	1	0	0	2	16
11:45 AM	**1**	5	1	0	**7**	0	4	0	0	4	1	**3**	**1**	2	**7**	3	0	0	0	3	**21**
Total Volume	1	17	3	0	21	2	10	0	4	16	3	5	1	7	16	7	8	0	0	15	68
% App. Total	4.8	81	14.3	0		12.5	62.5	0	25		18.8	31.2	6.2	43.8		46.7	53.3	0	0		
PHF	.250	.708	.375	.000	.750	.250	.625	.000	.500	.667	.750	.417	.250	.438	.571	.583	.500	.000	.000	.625	.810

SW 152nd Street & Old Cutler Road

File Name : SW 152nd Street & Old Cutler Road
Site Code : 00000000
Start Date : 5/26/2016
Page No : 6

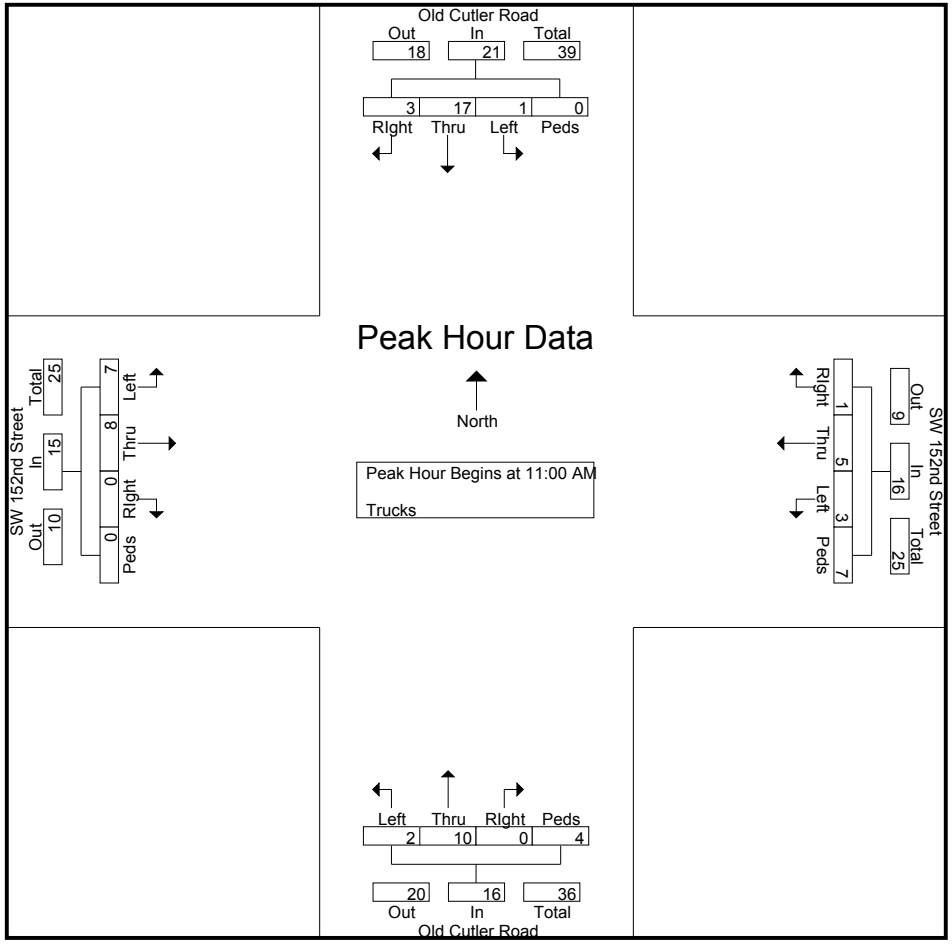

SW 152nd Street & Old Cutler Road

File Name : SW 152nd Street & Old Cutler Road
Site Code : 00000000
Start Date : 5/26/2016
Page No : 7

	Old Cutler Road Southbound					Old Cutler Road Northbound					SW 152nd Street Westbound					SW 152nd Street Eastbound					
Start Time	Left	Thru	RIght	Bikes	App. Total	Left	Thru	RIght	Bikes	App. Total	Left	Thru	RIght	Bikes	App. Total	Left	Thru	RIght	Bikes	App. Total	Int. Total
Peak Hour Analysis From 04:00 PM to 05:45 PM - Peak 1 of 1																					
Peak Hour for Entire Intersection Begins at 04:00 PM																					
04:00 PM	0	**8**	**3**	0	**11**	**2**	**2**	0	**1**	**5**	0	0	0	1	1	0	0	0	0	0	**17**
04:15 PM	0	7	2	0	9	0	1	0	0	1	0	**1**	0	0	1	**1**	0	**1**	0	**2**	13
04:30 PM	0	5	0	0	5	0	1	0	1	2	0	0	0	**5**	**5**	0	**1**	0	0	1	13
04:45 PM	0	5	1	0	6	1	1	0	0	2	**1**	0	0	2	3	0	0	0	0	0	11
Total Volume	0	25	6	0	31	3	5	0	2	10	1	1	0	8	10	1	1	1	0	3	54
% App. Total	0	80.6	19.4	0		30	50	0	20		10	10	0	80		33.3	33.3	33.3	0		
PHF	.000	.781	.500	.000	.705	.375	.625	.000	.500	.500	.250	.250	.000	.400	.500	.250	.250	.250	.000	.375	.794

SW 152nd Street & Old Cutler Road

File Name : SW 152nd Street & Old Cutler Road
Site Code : 00000000
Start Date : 5/26/2016
Page No : 8

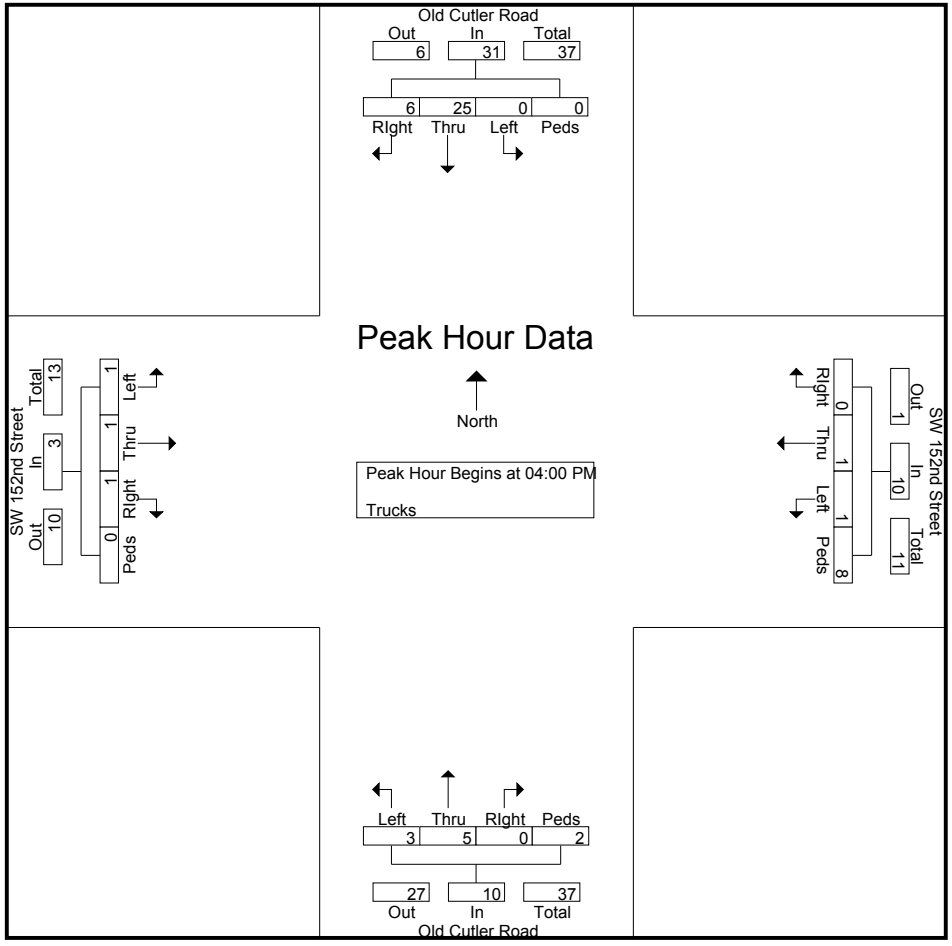

SW 152nd Street & Old Cutler Road

File Name : SW 152nd Street & Old Cutler Road
Site Code : 00000000
Start Date : 5/26/2016
Page No : 1

Groups Printed- Turns

	Old Cutler Road Southbound					Old Cutler Road Northbound					SW 152nd Street Westbound					SW 152nd Street Eastbound					
Start Time	Left	Thru	RIght	Peds/Bike	App. Total	Left	Thru	RIght	Peds/Bike	App. Total	Left	Thru	RIght	Peds/Bike	App. Total	Left	Thru	RIght	Peds/Bike	App. Total	Int. Total
07:00 AM	0	0	0	0	0	0	0	0	0	0	1	0	0	0	1	0	0	0	0	0	1
*** BREAK ***																					
Total	0	0	0	0	0	0	0	0	0	0	1	0	0	0	1	0	0	0	0	0	1
*** BREAK ***																					
Grand Total	0	0	0	0	0	0	0	0	0	0	1	0	0	0	1	0	0	0	0	0	1
Apprch %	0	0	0	0		0	0	0	0		100	0	0	0		0	0	0	0		
Total %	0	0	0	0	0	0	0	0	0	0	100	0	0	0	100	0	0	0	0	0	

SW 152nd Street & Old Cutler Road

File Name : SW 152nd Street & Old Cutler Road
Site Code : 00000000
Start Date : 5/26/2016
Page No : 2

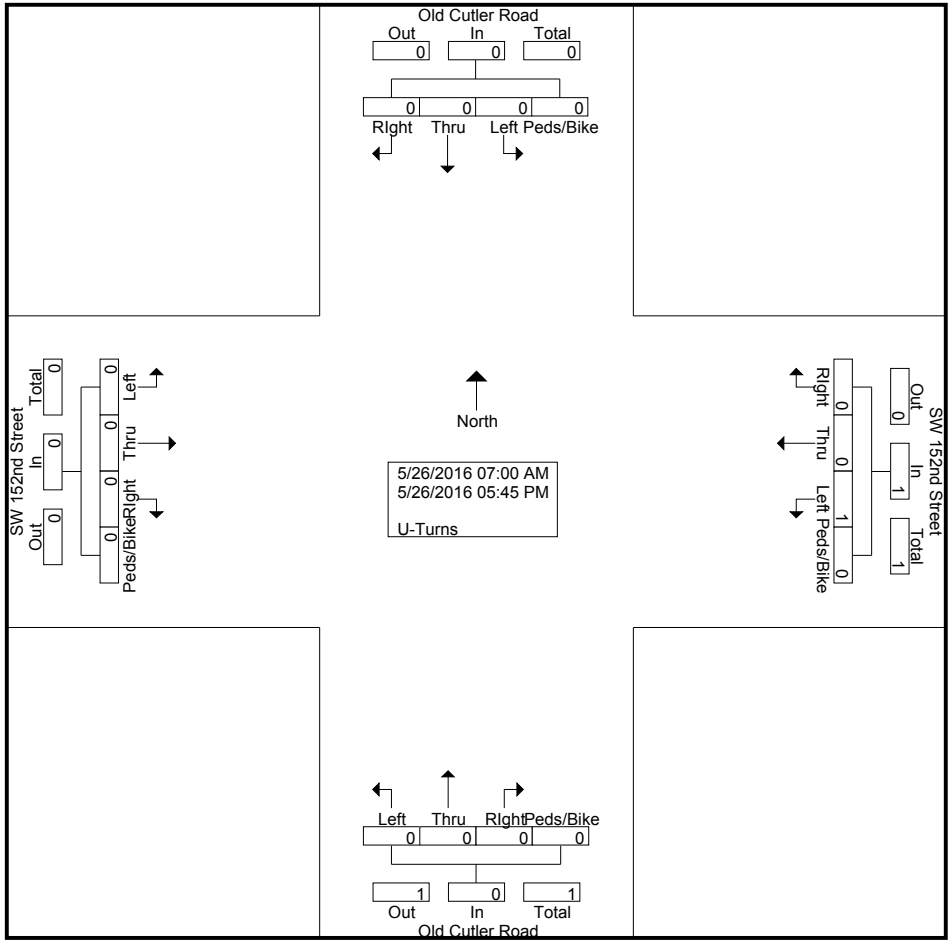

SW 152nd Street & Old Cutler Road

File Name : SW 152nd Street & Old Cutler Road
Site Code : 00000000
Start Date : 5/26/2016
Page No : 3

	Old Cutler Road Southbound					Old Cutler Road Northbound					SW 152nd Street Westbound					SW 152nd Street Eastbound					
Start Time	Left	Thru	RIght	Peds/Bike	App. Total	Left	Thru	RIght	Peds/Bike	App. Total	Left	Thru	RIght	Peds/Bike	App. Total	Left	Thru	RIght	Peds/Bike	App. Total	Int. Total
Peak Hour Analysis From 07:00 AM to 08:45 AM - Peak 1 of 1																					
Peak Hour for Entire Intersection Begins at 07:00 AM																					
07:00 AM	0	0	0	0	0	0	0	0	0	0	**1**	0	0	0	**1**	0	0	0	0	0	**1**
07:15 AM	0	0	0	0	0	0	0	0	0	0	0	0	0	0	0	0	0	0	0	0	0
07:30 AM	0	0	0	0	0	0	0	0	0	0	0	0	0	0	0	0	0	0	0	0	0
07:45 AM	0	0	0	0	0	0	0	0	0	0	0	0	0	0	0	0	0	0	0	0	0
Total Volume	0	0	0	0	0	0	0	0	0	0	1	0	0	0	1	0	0	0	0	0	1
% App. Total	0	0	0	0		0	0	0	0		100	0	0	0		0	0	0	0		
PHF	.000	.000	.000	.000	.000	.000	.000	.000	.000	.000	.250	.000	.000	.000	.250	.000	.000	.000	.000	.000	.250

SW 152nd Street & Old Cutler Road

File Name : SW 152nd Street & Old Cutler Road
Site Code : 00000000
Start Date : 5/26/2016
Page No : 4

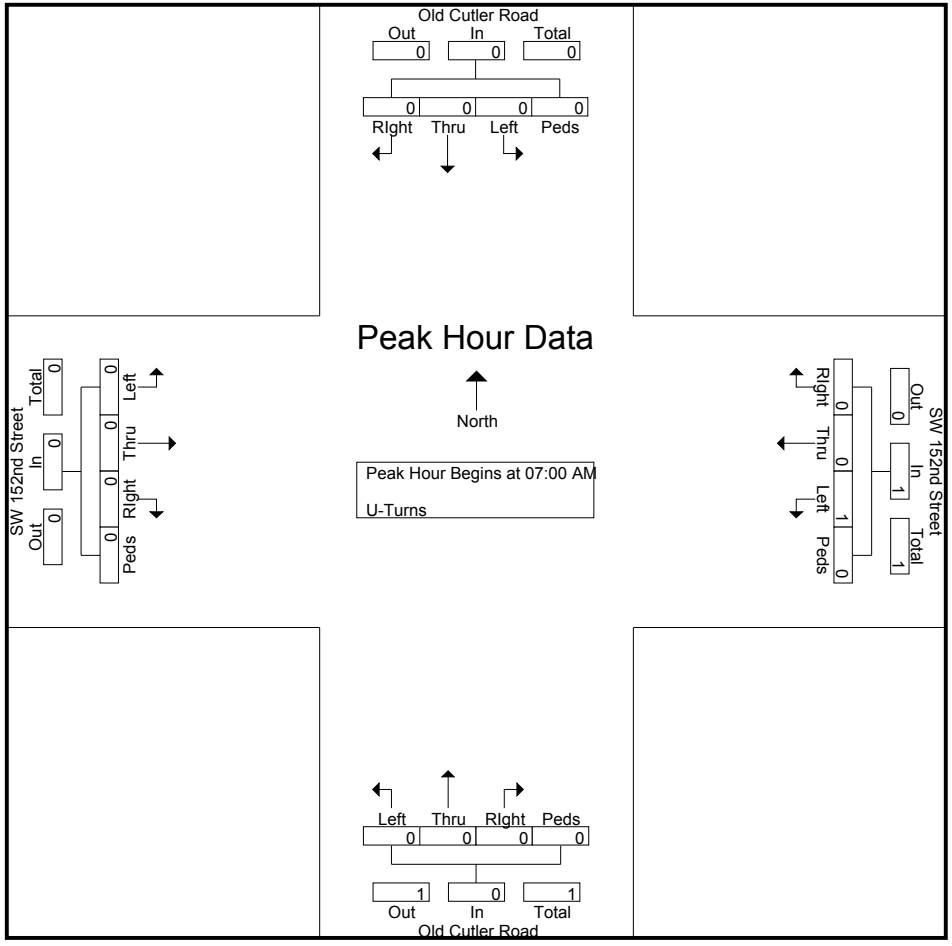

SW 152nd Street & Old Cutler Road

File Name : SW 152nd Street & Old Cutler Road
Site Code : 00000000
Start Date : 5/26/2016
Page No : 5

	Old Cutler Road Southbound					Old Cutler Road Northbound					SW 152nd Street Westbound					SW 152nd Street Eastbound					
Start Time	Left	Thru	RIght	Peds/Bike	App. Total	Left	Thru	RIght	Peds/Bike	App. Total	Left	Thru	RIght	Peds/Bike	App. Total	Left	Thru	RIght	Peds/Bike	App. Total	Int. Total
Peak Hour Analysis From 11:00 AM to 12:45 PM - Peak 1 of 1																					
Peak Hour for Entire Intersection Begins at 11:00 AM																					
11:00 AM	0	0	0	0	0	0	0	0	0	0	0	0	0	0	0	0	0	0	0	0	0
11:15 AM	0	0	0	0	0	0	0	0	0	0	0	0	0	0	0	0	0	0	0	0	0
11:30 AM	0	0	0	0	0	0	0	0	0	0	0	0	0	0	0	0	0	0	0	0	0
11:45 AM	0	0	0	0	0	0	0	0	0	0	0	0	0	0	0	0	0	0	0	0	0
Total Volume	0	0	0	0	0	0	0	0	0	0	0	0	0	0	0	0	0	0	0	0	0
% App. Total	0	0	0	0		0	0	0	0		0	0	0	0		0	0	0	0		
PHF	.000	.000	.000	.000	.000	.000	.000	.000	.000	.000	.000	.000	.000	.000	.000	.000	.000	.000	.000	.000	.000

SW 152nd Street & Old Cutler Road

File Name : SW 152nd Street & Old Cutler Road
Site Code : 00000000
Start Date : 5/26/2016
Page No : 6

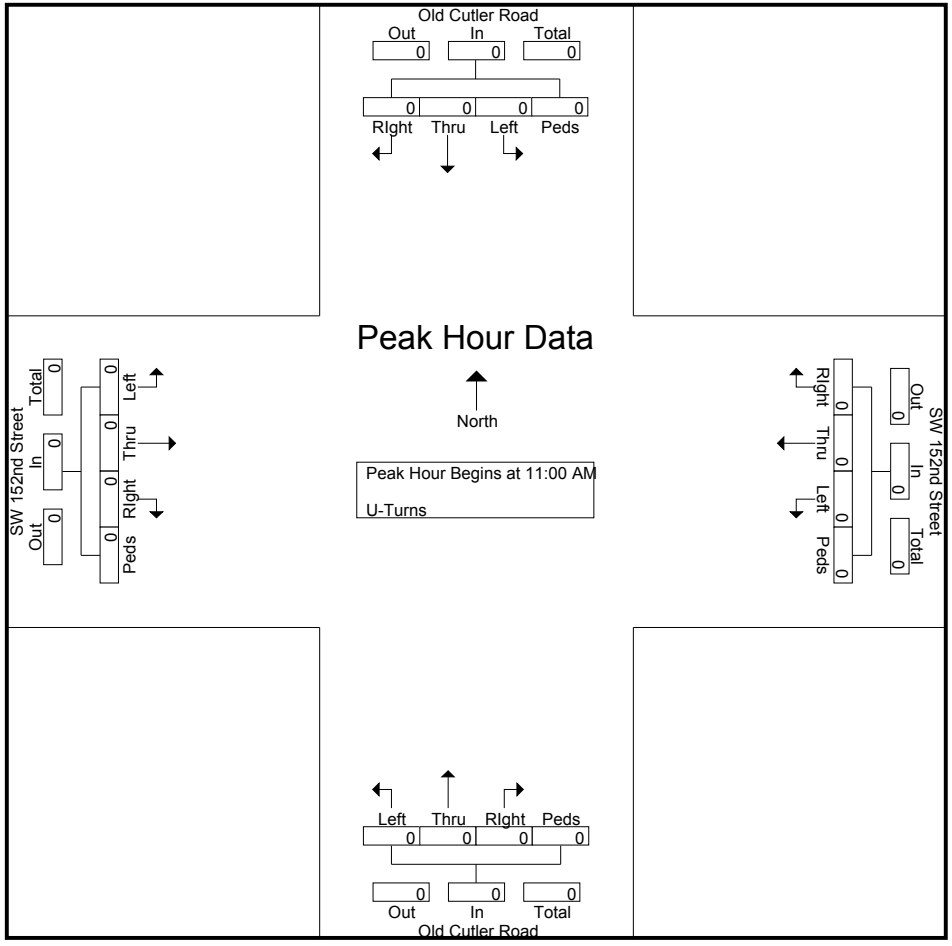

SW 152nd Street & Old Cutler Road

File Name : SW 152nd Street & Old Cutler Road
Site Code : 00000000
Start Date : 5/26/2016
Page No : 7

	Old Cutler Road Southbound					Old Cutler Road Northbound					SW 152nd Street Westbound					SW 152nd Street Eastbound					
Start Time	Left	Thru	RIght	Peds/Bike	App. Total	Left	Thru	RIght	Peds/Bike	App. Total	Left	Thru	RIght	Peds/Bike	App. Total	Left	Thru	RIght	Peds/Bike	App. Total	Int. Total
Peak Hour Analysis From 04:00 PM to 05:45 PM - Peak 1 of 1																					
Peak Hour for Entire Intersection Begins at 04:00 PM																					
04:00 PM	0	0	0	0	0	0	0	0	0	0	0	0	0	0	0	0	0	0	0	0	0
04:15 PM	0	0	0	0	0	0	0	0	0	0	0	0	0	0	0	0	0	0	0	0	0
04:30 PM	0	0	0	0	0	0	0	0	0	0	0	0	0	0	0	0	0	0	0	0	0
04:45 PM	0	0	0	0	0	0	0	0	0	0	0	0	0	0	0	0	0	0	0	0	0
Total Volume	0	0	0	0	0	0	0	0	0	0	0	0	0	0	0	0	0	0	0	0	0
% App. Total	0	0	0	0		0	0	0	0		0	0	0	0		0	0	0	0		
PHF	.000	.000	.000	.000	.000	.000	.000	.000	.000	.000	.000	.000	.000	.000	.000	.000	.000	.000	.000	.000	.000

SW 152nd Street & Old Cutler Road

File Name : SW 152nd Street & Old Cutler Road
Site Code : 00000000
Start Date : 5/26/2016
Page No : 8

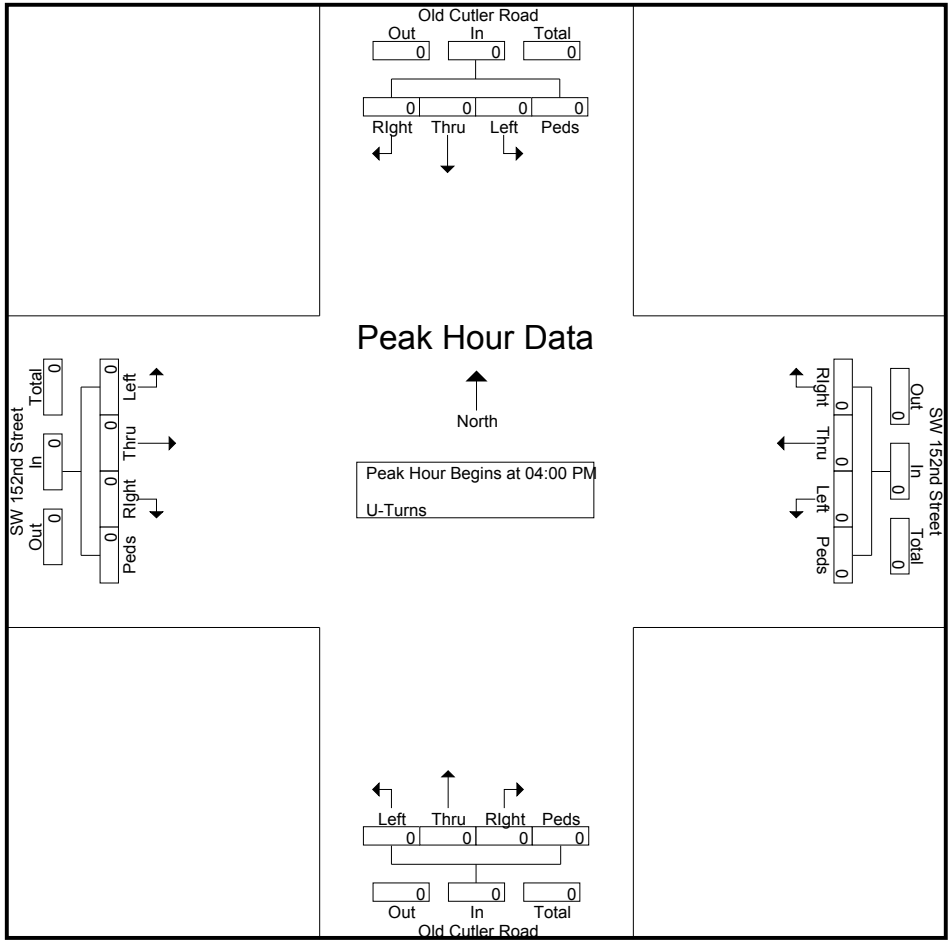

SW 152nd Street & Old Cutler Road

File Name : SW 152nd Street & Old Cutler Road
Site Code : 00000000
Start Date : 5/26/2016
Page No : 1

Groups Printed- Veh - Trucks - Turns

	Old Cutler Road Southbound					Old Cutler Road Northbound					SW 152nd Street Westbound					SW 152nd Street Eastbound					
Start Time	Left	Thru	RIght	Peds/Bike	App. Total	Left	Thru	RIght	Peds/Bike	App. Total	Left	Thru	RIght	Peds/Bike	App. Total	Left	Thru	RIght	Peds/Bike	App. Total	Int. Total
07:00 AM	2	67	7	0	76	29	132	108	9	278	9	5	1	4	19	32	24	13	0	69	442
07:15 AM	4	121	11	2	138	28	221	30	0	279	14	9	0	1	24	21	24	12	0	57	498
07:30 AM	5	133	4	2	144	24	217	49	0	290	9	10	3	1	23	32	32	21	0	85	542
07:45 AM	11	121	4	0	136	24	209	34	0	267	20	18	6	4	48	20	37	14	0	71	522
Total	22	442	26	4	494	105	779	221	9	1114	52	42	10	10	114	105	117	60	0	282	2004
08:00 AM	8	74	4	0	86	34	190	30	1	255	25	25	5	3	58	18	26	22	0	66	465
08:15 AM	5	73	12	0	90	27	223	24	0	274	9	9	1	5	24	12	14	20	0	46	434
08:30 AM	1	87	10	1	99	38	209	14	4	265	12	13	3	1	29	23	12	42	0	77	470
08:45 AM	2	77	14	0	93	30	211	12	0	253	11	8	2	0	21	33	19	33	0	85	452
Total	16	311	40	1	368	129	833	80	5	1047	57	55	11	9	132	86	71	117	0	274	1821
*** BREAK ***																					
11:00 AM	2	84	8	0	94	36	128	10	2	176	10	13	7	1	31	21	18	23	0	62	363
11:15 AM	2	66	19	0	87	39	112	14	2	167	12	14	3	4	33	6	19	30	0	55	342
11:30 AM	0	66	10	0	76	37	111	14	0	162	33	38	3	0	74	17	8	25	0	50	362
11:45 AM	3	91	15	0	109	44	123	5	0	172	25	37	12	2	76	18	9	37	0	64	421
Total	7	307	52	0	366	156	474	43	4	677	80	102	25	7	214	62	54	115	0	231	1488
12:00 PM	0	100	18	0	118	42	90	5	0	137	21	27	2	1	51	12	11	33	0	56	362
12:15 PM	0	89	12	0	101	46	115	9	0	170	14	16	3	2	35	16	10	29	0	55	361
12:30 PM	1	94	10	1	106	44	84	9	0	137	16	7	1	4	28	15	11	31	0	57	328
12:45 PM	2	75	9	0	86	57	81	8	0	146	13	17	0	4	34	14	9	27	0	50	316
Total	3	358	49	1	411	189	370	31	0	590	64	67	6	11	148	57	41	120	0	218	1367
*** BREAK ***																					
04:00 PM	1	129	29	0	159	39	94	12	1	146	21	27	1	1	50	14	13	56	0	83	438
04:15 PM	1	159	25	0	185	40	124	13	0	177	14	21	0	0	35	17	9	32	0	58	455
04:30 PM	0	145	23	0	168	43	98	7	1	149	21	31	0	6	58	17	10	39	0	66	441
04:45 PM	3	169	28	0	200	42	96	5	0	143	24	11	2	3	40	14	8	29	0	51	434
Total	5	602	105	0	712	164	412	37	2	615	80	90	3	10	183	62	40	156	0	258	1768
05:00 PM	0	137	35	0	172	42	124	3	0	169	30	31	0	2	63	23	18	52	0	93	497
05:15 PM	0	154	34	0	188	49	118	10	0	177	24	23	1	1	49	9	8	36	0	53	467
05:30 PM	1	98	26	0	125	17	98	11	1	127	23	41	0	4	68	12	14	53	0	79	399
05:45 PM	1	112	31	0	144	34	97	5	0	136	23	35	3	2	63	17	12	43	0	72	415
Total	2	501	126	0	629	142	437	29	1	609	100	130	4	9	243	61	52	184	0	297	1778
Grand Total	55	2521	398	6	2980	885	3305	441	21	4652	433	486	59	56	1034	433	375	752	0	1560	10226
Apprch %	1.8	84.6	13.4	0.2		19	71	9.5	0.5		41.9	47	5.7	5.4		27.8	24	48.2	0		
Total %	0.5	24.7	3.9	0.1	29.1	8.7	32.3	4.3	0.2	45.5	4.2	4.8	0.6	0.5	10.1	4.2	3.7	7.4	0	15.3	
Veh	52	2437	377	4	2870	875	3232	434	14	4555	424	472	56	11	963	408	353	738	0	1499	9887
% Veh	94.5	96.7	94.7	66.7	96.3	98.9	97.8	98.4	66.7	97.9	97.9	97.1	94.9	19.6	93.1	94.2	94.1	98.1	0	96.1	96.7
Trucks	3	84	21	2	110	10	73	7	7	97	8	14	3	45	70	25	22	14	0	61	338
% Trucks	5.5	3.3	5.3	33.3	3.7	1.1	2.2	1.6	33.3	2.1	1.8	2.9	5.1	80.4	6.8	5.8	5.9	1.9	0	3.9	3.3

SW 152nd Street & Old Cutler Road

File Name : SW 152nd Street & Old Cutler Road
Site Code : 00000000
Start Date : 5/26/2016
Page No : 2

Groups Printed- Veh - Trucks - Turns

	Old Cutler Road Southbound					Old Cutler Road Northbound					SW 152nd Street Westbound					SW 152nd Street Eastbound					
	Left	Thru	RIght	Peds/Bike	App. Total	Left	Thru	RIght	Peds/Bike	App. Total	Left	Thru	RIght	Peds/Bike	App. Total	Left	Thru	RIght	Peds/Bike	App. Total	Int. Total
U-Turns	0	0	0	0	0	0	0	0	0	0	1	0	0	0	1	0	0	0	0	0	1
% U-Turns	0	0	0	0	0	0	0	0	0	0	0.2	0	0	0	0.1	0	0	0	0	0	0

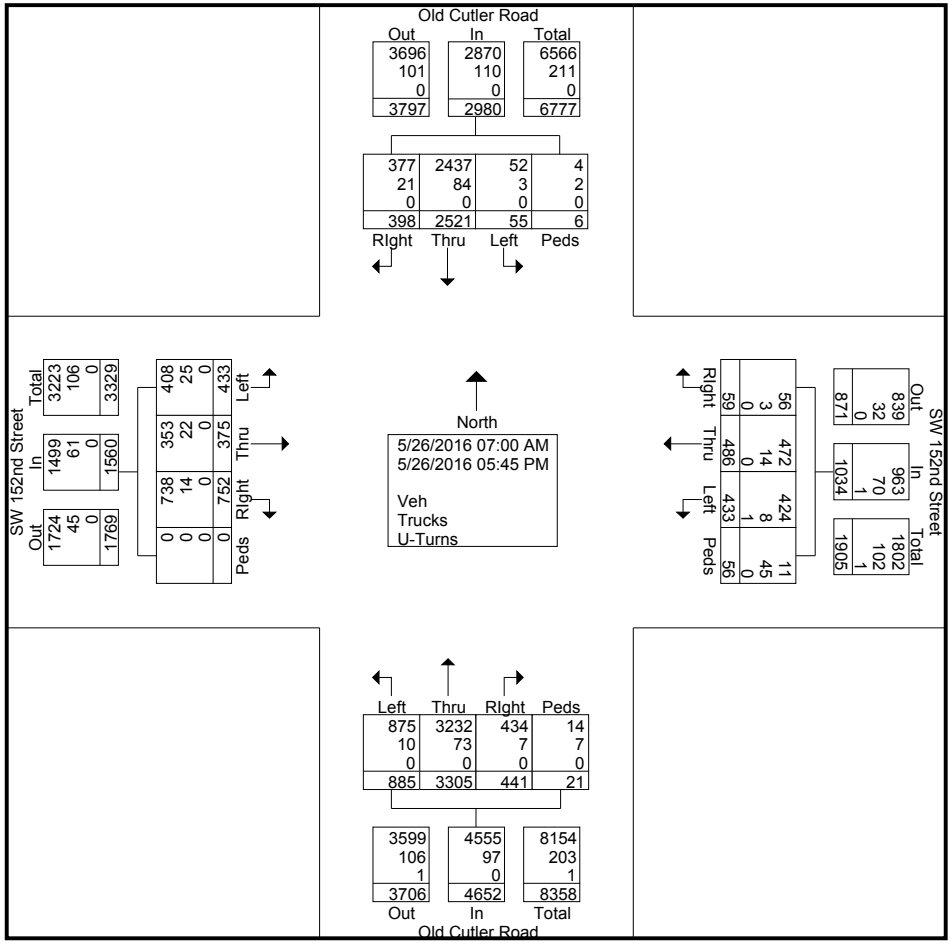

SW 152nd Street & Old Cutler Road

File Name : SW 152nd Street & Old Cutler Road
Site Code : 00000000
Start Date : 5/26/2016
Page No : 3

	Old Cutler Road Southbound					Old Cutler Road Northbound					SW 152nd Street Westbound					SW 152nd Street Eastbound					
Start Time	Left	Thru	RIght	Peds/Bike	App. Total	Left	Thru	RIght	Peds/Bike	App. Total	Left	Thru	RIght	Peds/Bike	App. Total	Left	Thru	RIght	Peds/Bike	App. Total	Int. Total
Peak Hour Analysis From 07:00 AM to 08:45 AM - Peak 1 of 1																					
Peak Hour for Entire Intersection Begins at 07:15 AM																					
07:15 AM	4	121	**11**	**2**	138	28	**221**	30	0	279	14	9	0	1	24	21	24	12	0	57	498
07:30 AM	5	**133**	4	2	**144**	24	217	**49**	0	**290**	9	10	3	1	23	**32**	32	21	0	**85**	**542**
07:45 AM	**11**	121	4	0	136	24	209	34	0	267	20	18	**6**	**4**	48	20	**37**	14	0	71	522
08:00 AM	8	74	4	0	86	**34**	190	30	**1**	255	**25**	**25**	5	3	**58**	18	26	**22**	0	66	465
Total Volume	28	449	23	4	504	110	837	143	1	1091	68	62	14	9	153	91	119	69	0	279	2027
% App. Total	5.6	89.1	4.6	0.8		10.1	76.7	13.1	0.1		44.4	40.5	9.2	5.9		32.6	42.7	24.7	0		
PHF	.636	.844	.523	.500	.875	.809	.947	.730	.250	.941	.680	.620	.583	.563	.659	.711	.804	.784	.000	.821	.935

SW 152nd Street & Old Cutler Road

File Name : SW 152nd Street & Old Cutler Road
Site Code : 00000000
Start Date : 5/26/2016
Page No : 4

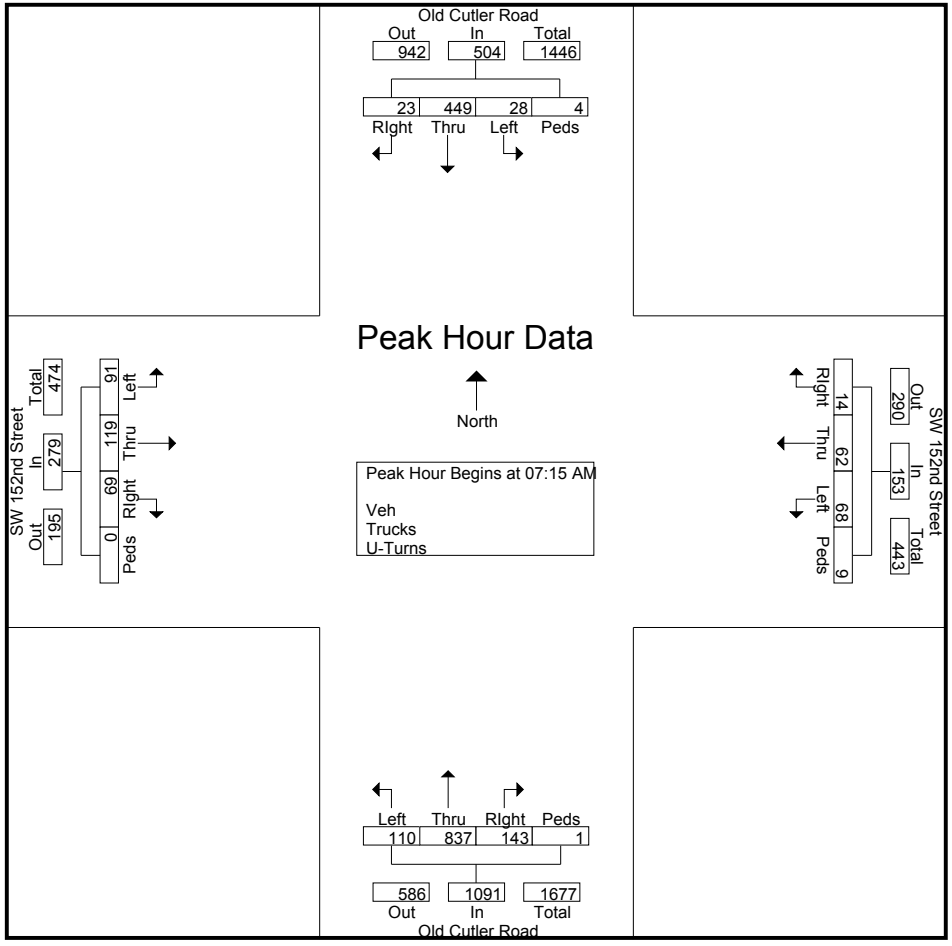

SW 152nd Street & Old Cutler Road

File Name : SW 152nd Street & Old Cutler Road
Site Code : 00000000
Start Date : 5/26/2016
Page No : 5

	Old Cutler Road Southbound					Old Cutler Road Northbound					SW 152nd Street Westbound					SW 152nd Street Eastbound					
Start Time	Left	Thru	RIght	Peds/Bike	App. Total	Left	Thru	RIght	Peds/Bike	App. Total	Left	Thru	RIght	Peds/Bike	App. Total	Left	Thru	RIght	Peds/Bike	App. Total	Int. Total
Peak Hour Analysis From 11:00 AM to 12:45 PM - Peak 1 of 1																					
Peak Hour for Entire Intersection Begins at 11:30 AM																					
11:30 AM	0	66	10	0	76	37	111	**14**	0	162	**33**	**38**	3	0	74	17	8	25	0	50	362
11:45 AM	**3**	91	15	0	109	44	**123**	5	0	**172**	25	37	**12**	**2**	**76**	**18**	9	**37**	0	**64**	**421**
12:00 PM	0	**100**	**18**	0	**118**	42	90	5	0	137	21	27	2	1	51	12	**11**	33	0	56	362
12:15 PM	0	89	12	0	101	**46**	115	9	0	170	14	16	3	2	35	16	10	29	0	55	361
Total Volume	3	346	55	0	404	169	439	33	0	641	93	118	20	5	236	63	38	124	0	225	1506
% App. Total	0.7	85.6	13.6	0		26.4	68.5	5.1	0		39.4	50	8.5	2.1		28	16.9	55.1	0		
PHF	.250	.865	.764	.000	.856	.918	.892	.589	.000	.932	.705	.776	.417	.625	.776	.875	.864	.838	.000	.879	.894

SW 152nd Street & Old Cutler Road

File Name : SW 152nd Street & Old Cutler Road
Site Code : 00000000
Start Date : 5/26/2016
Page No : 6

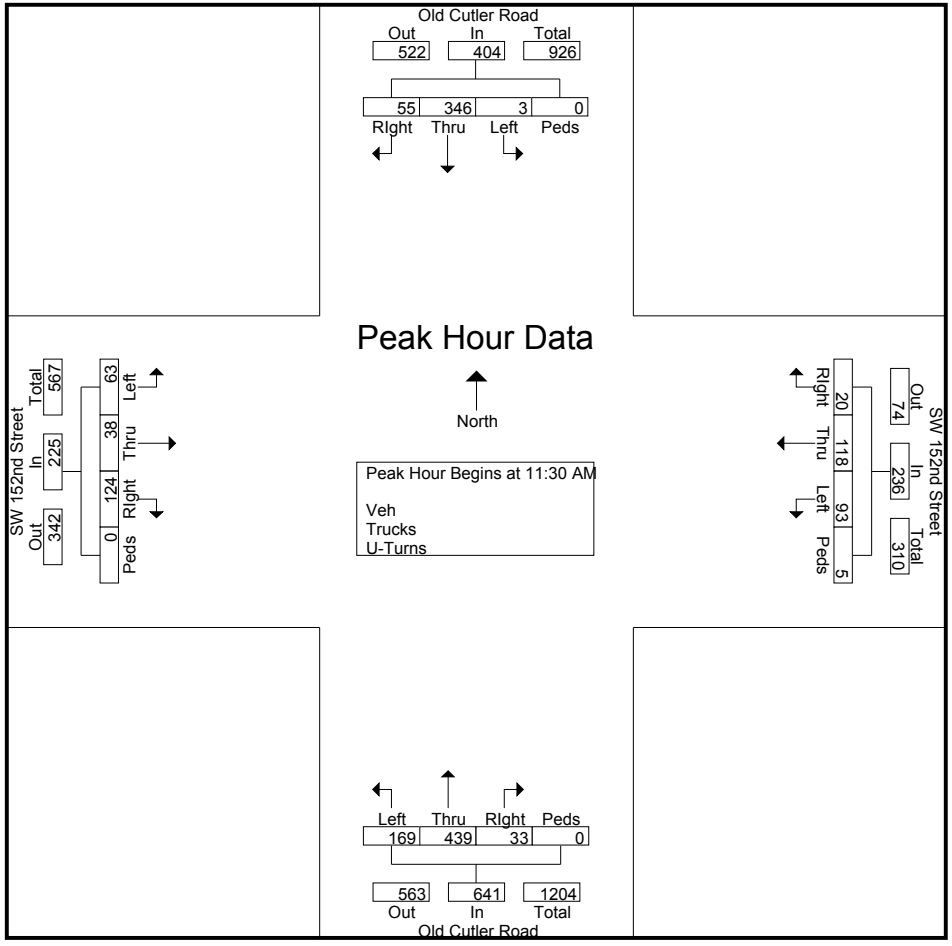

SW 152nd Street & Old Cutler Road

File Name : SW 152nd Street & Old Cutler Road
Site Code : 00000000
Start Date : 5/26/2016
Page No : 7

	Old Cutler Road Southbound					Old Cutler Road Northbound					SW 152nd Street Westbound					SW 152nd Street Eastbound					
Start Time	Left	Thru	RIght	Peds/Bike	App. Total	Left	Thru	RIght	Peds/Bike	App. Total	Left	Thru	RIght	Peds/Bike	App. Total	Left	Thru	RIght	Peds/Bike	App. Total	Int. Total
Peak Hour Analysis From 04:00 PM to 05:45 PM - Peak 1 of 1																					
Peak Hour for Entire Intersection Begins at 04:30 PM																					
04:30 PM	0	145	23	0	168	43	98	7	**1**	149	21	**31**	0	**6**	58	17	10	39	0	66	441
04:45 PM	**3**	**169**	28	0	**200**	42	96	5	0	143	24	11	**2**	3	40	14	8	29	0	51	434
05:00 PM	0	137	**35**	0	172	42	**124**	3	0	169	**30**	31	0	2	**63**	**23**	**18**	**52**	0	**93**	**497**
05:15 PM	0	154	34	0	188	**49**	118	**10**	0	**177**	24	23	1	1	49	9	8	36	0	53	467
Total Volume	3	605	120	0	728	176	436	25	1	638	99	96	3	12	210	63	44	156	0	263	1839
% App. Total	0.4	83.1	16.5	0		27.6	68.3	3.9	0.2		47.1	45.7	1.4	5.7		24	16.7	59.3	0		
PHF	.250	.895	.857	.000	.910	.898	.879	.625	.250	.901	.825	.774	.375	.500	.833	.685	.611	.750	.000	.707	.925

SW 152nd Street & Old Cutler Road

File Name : SW 152nd Street & Old Cutler Road
Site Code : 00000000
Start Date : 5/26/2016
Page No : 8

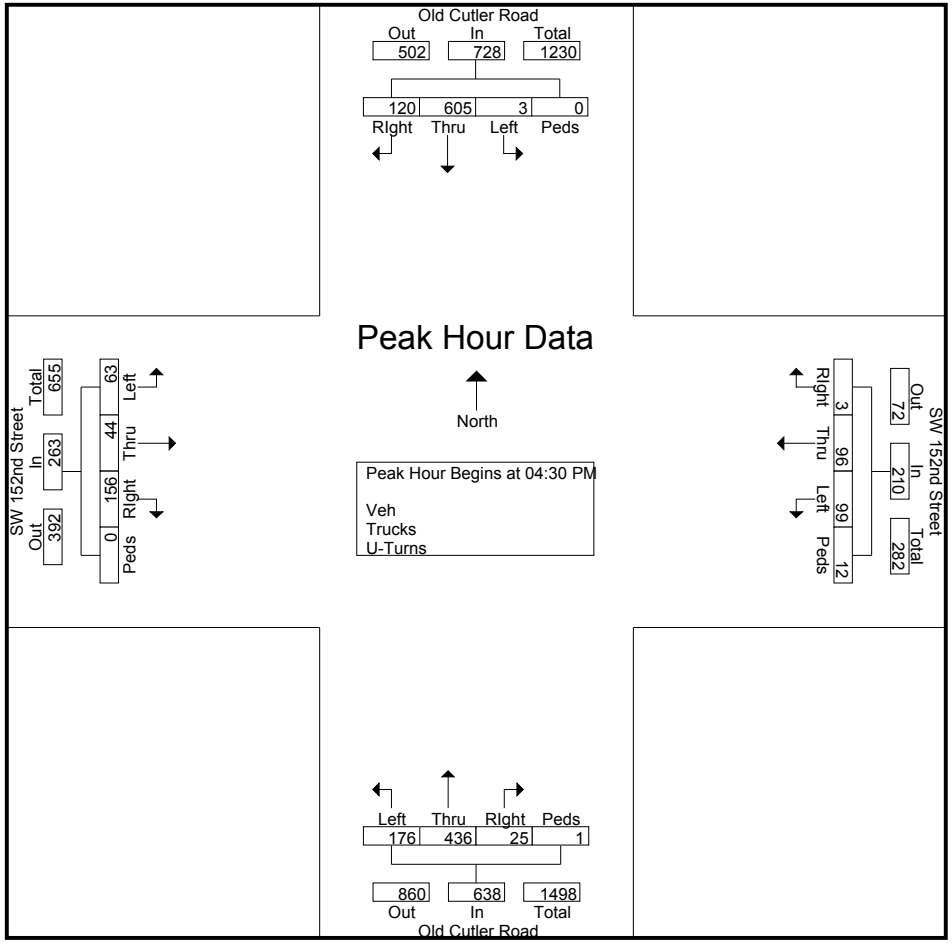

SW 152nd Street & SW 77th Avenue

File Name : SW 152nd Street & SW 77th Avenue
Site Code : 00000000
Start Date : 5/26/2016
Page No : 1

Groups Printed- Trucks

	SW 77th Avenue Southbound					SW 77th Avenue Northbound					SW 152nd Street Westbound					SW 152nd Street Eastbound					
Start Time	Left	Thru	RIght	Bikes	App. Total	Left	Thru	RIght	Bikes	App. Total	Left	Thru	RIght	Bikes	App. Total	Left	Thru	RIght	Bikes	App. Total	Int. Total
07:00 AM	0	0	1	0	1	0	0	0	0	0	0	0	0	0	0	2	2	0	0	4	5
07:15 AM	1	0	1	0	2	0	0	0	0	0	0	0	0	0	0	4	2	0	0	6	8
07:30 AM	0	0	0	0	0	0	0	0	0	0	0	0	0	0	0	7	1	0	0	8	8
07:45 AM	2	0	0	0	2	0	0	0	0	0	0	0	0	0	0	0	4	0	0	4	6
Total	3	0	2	0	5	0	0	0	0	0	0	0	0	0	0	13	9	0	0	22	27
08:00 AM	0	0	2	0	2	0	0	0	0	0	0	0	0	0	0	0	2	0	0	2	4
08:15 AM	1	0	1	0	2	0	0	0	0	0	0	0	0	0	0	2	1	0	0	3	5
08:30 AM	1	0	1	0	2	0	0	0	0	0	0	0	0	0	0	3	1	0	0	4	6
08:45 AM	0	0	1	0	1	0	0	0	0	0	0	0	0	0	0	3	3	0	0	6	7
Total	2	0	5	0	7	0	0	0	0	0	0	0	0	0	0	8	7	0	0	15	22
*** BREAK ***																					
11:00 AM	0	0	4	0	4	0	0	0	2	2	0	1	0	0	1	0	3	0	0	3	10
11:15 AM	0	1	2	0	3	0	0	0	0	0	0	0	0	2	2	0	3	0	0	3	8
11:30 AM	0	1	1	0	2	0	0	0	0	0	0	1	1	1	3	0	1	0	0	1	6
11:45 AM	0	0	0	0	0	0	1	1	0	2	0	3	1	0	4	2	1	1	0	4	10
Total	0	2	7	0	9	0	1	1	2	4	0	5	2	3	10	2	8	1	0	11	34
12:00 PM	0	0	1	0	1	0	0	0	0	0	0	1	0	0	1	0	0	1	0	1	3
12:15 PM	0	0	0	0	0	0	0	0	0	0	0	1	0	0	1	2	1	0	0	3	4
12:30 PM	0	0	0	0	0	0	0	0	0	0	0	1	0	1	2	0	1	0	0	1	3
12:45 PM	0	0	1	0	1	0	0	0	0	0	0	0	0	0	0	2	2	0	0	4	5
Total	0	0	2	0	2	0	0	0	0	0	0	3	0	1	4	4	4	1	0	9	15
*** BREAK ***																					
04:00 PM	1	0	9	0	10	0	0	0	0	0	0	2	2	0	4	1	0	0	0	1	15
04:15 PM	0	0	4	0	4	0	0	0	0	0	0	2	0	0	2	1	1	0	0	2	8
04:30 PM	0	0	2	0	2	0	0	0	0	0	0	0	1	0	1	0	0	0	0	0	3
04:45 PM	0	0	2	0	2	0	0	0	0	0	0	2	0	0	2	1	0	0	0	1	5
Total	1	0	17	0	18	0	0	0	0	0	0	6	3	0	9	3	1	0	0	4	31
05:00 PM	0	0	2	0	2	0	0	1	0	1	0	1	0	0	1	0	3	0	0	3	7
05:15 PM	0	0	4	0	4	0	0	0	0	0	0	0	0	0	0	0	0	0	0	0	4
05:30 PM	0	0	0	0	0	0	0	0	0	0	0	1	0	0	1	0	0	0	0	0	1
05:45 PM	1	1	2	0	4	0	0	0	0	0	0	1	0	0	1	1	0	0	0	1	6
Total	1	1	8	0	10	0	0	1	0	1	0	3	0	0	3	1	3	0	0	4	18
Grand Total	7	3	41	0	51	0	1	2	2	5	0	17	5	4	26	31	32	2	0	65	147
Apprch %	13.7	5.9	80.4	0		0	20	40	40		0	65.4	19.2	15.4		47.7	49.2	3.1	0		
Total %	4.8	2	27.9	0	34.7	0	0.7	1.4	1.4	3.4	0	11.6	3.4	2.7	17.7	21.1	21.8	1.4	0	44.2	

SW 152nd Street & SW 77th Avenue

File Name : SW 152nd Street & SW 77th Avenue
Site Code : 00000000
Start Date : 5/26/2016
Page No : 2

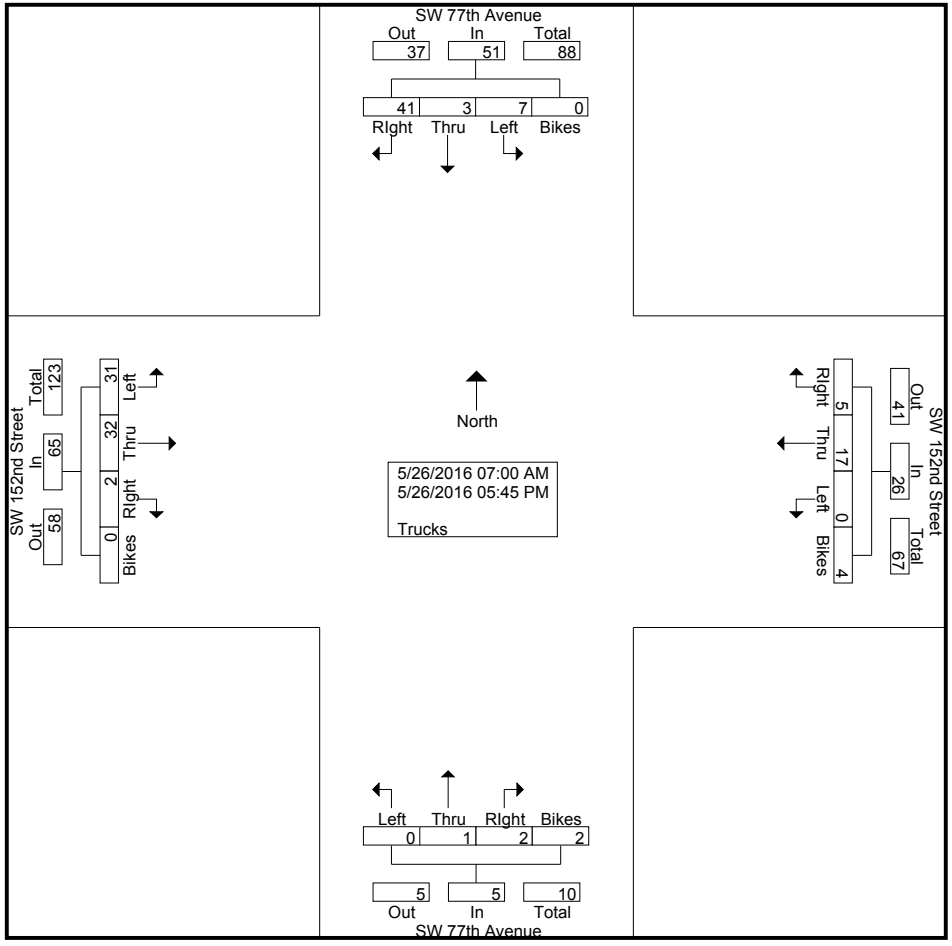

SW 152nd Street & SW 77th Avenue

File Name : SW 152nd Street & SW 77th Avenue
Site Code : 00000000
Start Date : 5/26/2016
Page No : 3

	SW 77th Avenue Southbound					SW 77th Avenue Northbound					SW 152nd Street Westbound					SW 152nd Street Eastbound					
Start Time	Left	Thru	RIght	Bikes	App. Total	Left	Thru	RIght	Bikes	App. Total	Left	Thru	RIght	Bikes	App. Total	Left	Thru	RIght	Bikes	App. Total	Int. Total
Peak Hour Analysis From 07:00 AM to 08:45 AM - Peak 1 of 1																					
Peak Hour for Entire Intersection Begins at 07:00 AM																					
07:00 AM	0	0	**1**	0	1	0	0	0	0	0	0	0	0	0	0	2	2	0	0	4	5
07:15 AM	1	0	1	0	**2**	0	0	0	0	0	0	0	0	0	0	4	2	0	0	6	**8**
07:30 AM	0	0	0	0	0	0	0	0	0	0	0	0	0	0	0	**7**	1	0	0	**8**	8
07:45 AM	**2**	0	0	0	2	0	0	0	0	0	0	0	0	0	0	0	**4**	0	0	4	6
Total Volume	3	0	2	0	5	0	0	0	0	0	0	0	0	0	0	13	9	0	0	22	27
% App. Total	60	0	40	0		0	0	0	0		0	0	0	0		59.1	40.9	0	0		
PHF	.375	.000	.500	.000	.625	.000	.000	.000	.000	.000	.000	.000	.000	.000	.000	.464	.563	.000	.000	.688	.844

SW 152nd Street & SW 77th Avenue

File Name : SW 152nd Street & SW 77th Avenue
Site Code : 00000000
Start Date : 5/26/2016
Page No : 4

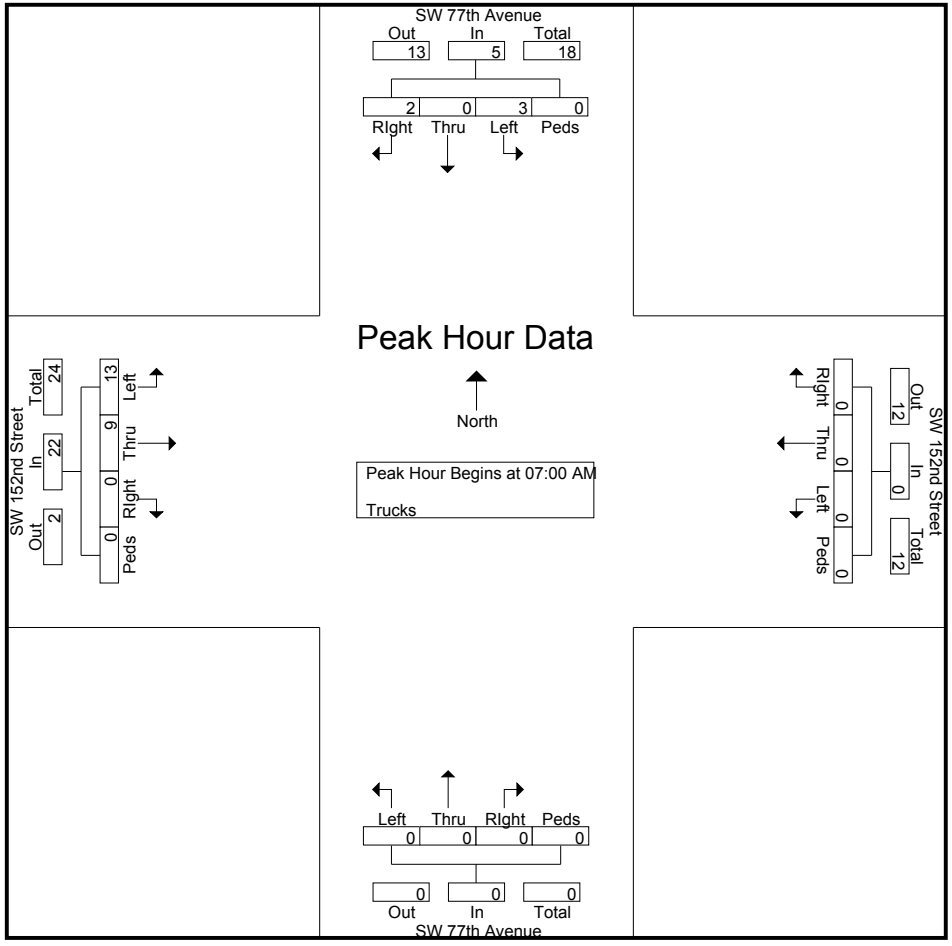

SW 152nd Street & SW 77th Avenue

File Name : SW 152nd Street & SW 77th Avenue
Site Code : 00000000
Start Date : 5/26/2016
Page No : 5

	SW 77th Avenue Southbound					SW 77th Avenue Northbound					SW 152nd Street Westbound					SW 152nd Street Eastbound					
Start Time	Left	Thru	RIght	Bikes	App. Total	Left	Thru	RIght	Bikes	App. Total	Left	Thru	RIght	Bikes	App. Total	Left	Thru	RIght	Bikes	App. Total	Int. Total
Peak Hour Analysis From 11:00 AM to 12:45 PM - Peak 1 of 1																					
Peak Hour for Entire Intersection Begins at 11:00 AM																					
11:00 AM	0	0	**4**	0	**4**	0	0	0	**2**	**2**	0	1	0	0	1	0	**3**	0	0	3	**10**
11:15 AM	0	**1**	2	0	3	0	0	0	0	0	0	0	0	**2**	2	0	3	0	0	3	8
11:30 AM	0	1	1	0	2	0	0	0	0	0	0	1	**1**	1	3	0	1	0	0	1	6
11:45 AM	0	0	0	0	0	0	**1**	**1**	0	2	0	**3**	1	0	**4**	**2**	1	**1**	0	**4**	10
Total Volume	0	2	7	0	9	0	1	1	2	4	0	5	2	3	10	2	8	1	0	11	34
% App. Total	0	22.2	77.8	0		0	25	25	50		0	50	20	30		18.2	72.7	9.1	0		
PHF	.000	.500	.438	.000	.563	.000	.250	.250	.250	.500	.000	.417	.500	.375	.625	.250	.667	.250	.000	.688	.850

SW 152nd Street & SW 77th Avenue

File Name : SW 152nd Street & SW 77th Avenue
Site Code : 00000000
Start Date : 5/26/2016
Page No : 6

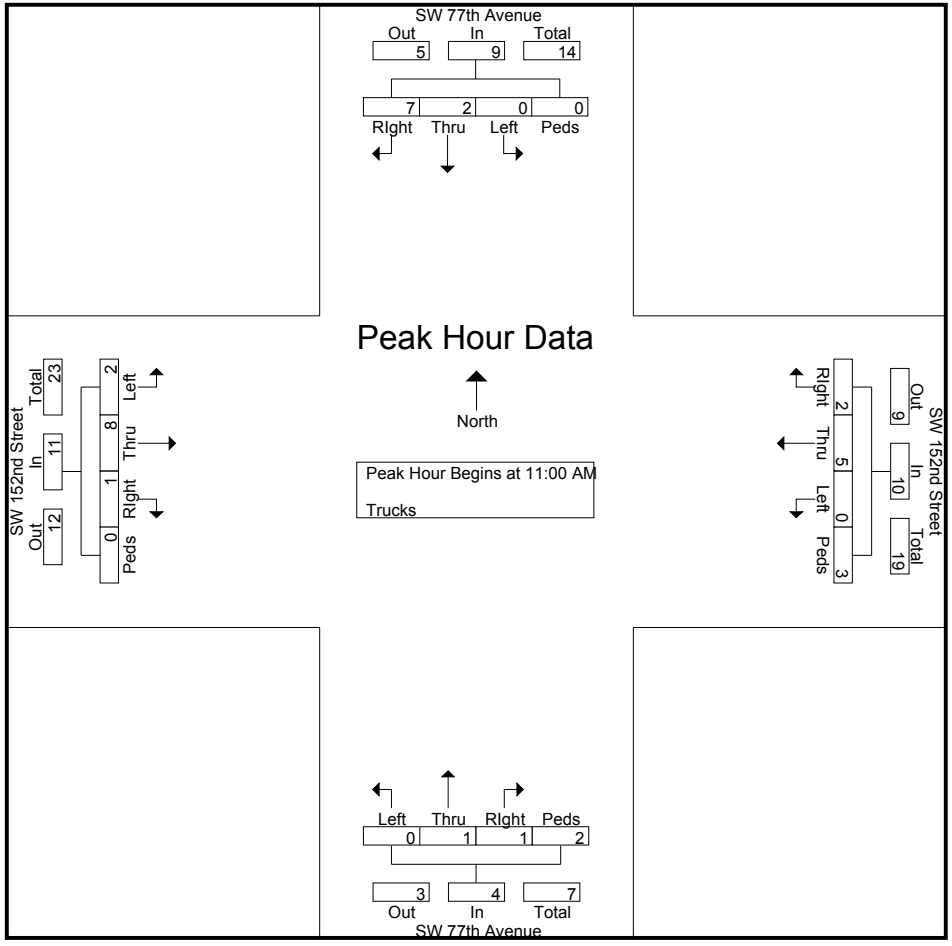

SW 152nd Street & SW 77th Avenue

File Name : SW 152nd Street & SW 77th Avenue
Site Code : 00000000
Start Date : 5/26/2016
Page No : 7

	SW 77th Avenue Southbound					SW 77th Avenue Northbound					SW 152nd Street Westbound					SW 152nd Street Eastbound					
Start Time	Left	Thru	RIght	Bikes	App. Total	Left	Thru	RIght	Bikes	App. Total	Left	Thru	RIght	Bikes	App. Total	Left	Thru	RIght	Bikes	App. Total	Int. Total
Peak Hour Analysis From 04:00 PM to 05:45 PM - Peak 1 of 1																					
Peak Hour for Entire Intersection Begins at 04:00 PM																					
04:00 PM	**1**	0	**9**	0	**10**	0	0	0	0	0	0	**2**	**2**	0	**4**	**1**	0	0	0	1	**15**
04:15 PM	0	0	4	0	4	0	0	0	0	0	0	2	0	0	2	1	**1**	0	0	**2**	8
04:30 PM	0	0	2	0	2	0	0	0	0	0	0	0	1	0	1	0	0	0	0	0	3
04:45 PM	0	0	2	0	2	0	0	0	0	0	0	2	0	0	2	1	0	0	0	1	5
Total Volume	1	0	17	0	18	0	0	0	0	0	0	6	3	0	9	3	1	0	0	4	31
% App. Total	5.6	0	94.4	0		0	0	0	0		0	66.7	33.3	0		75	25	0	0		
PHF	.250	.000	.472	.000	.450	.000	.000	.000	.000	.000	.000	.750	.375	.000	.563	.750	.250	.000	.000	.500	.517

SW 152nd Street & SW 77th Avenue

File Name : SW 152nd Street & SW 77th Avenue
Site Code : 00000000
Start Date : 5/26/2016
Page No : 8

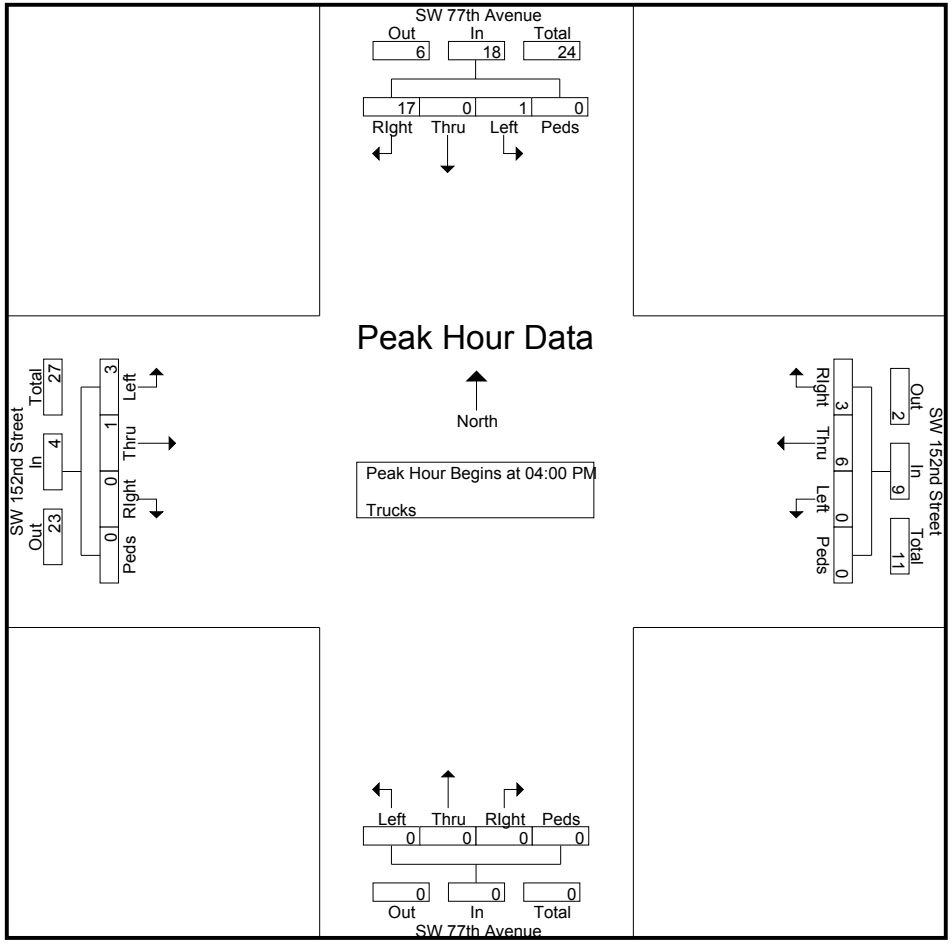

SW 152nd Street & SW 77th Avenue

File Name : SW 152nd Street & SW 77th Avenue
Site Code : 00000000
Start Date : 5/26/2016
Page No : 1

Groups Printed- Veh - Trucks - Turns

	SW 77th Avenue Southbound					SW 77th Avenue Northbound					SW 152nd Street Westbound					SW 152nd Street Eastbound					
Start Time	Left	Thru	RIght	Peds/Bike	App. Total	Left	Thru	RIght	Peds/Bike	App. Total	Left	Thru	RIght	Peds/Bike	App. Total	Left	Thru	RIght	Peds/Bike	App. Total	Int. Total
07:00 AM	10	7	13	0	30	3	8	2	1	14	1	14	36	0	51	155	51	2	0	208	303
07:15 AM	20	12	12	0	44	3	15	1	4	23	0	13	26	0	39	159	78	4	0	241	347
07:30 AM	14	14	6	1	35	1	8	0	3	12	0	18	36	0	54	159	71	5	0	235	336
07:45 AM	18	10	7	0	35	6	20	1	1	28	0	22	28	0	50	143	75	2	0	220	333
Total	62	43	38	1	144	13	51	4	9	77	1	67	126	0	194	616	275	13	0	904	1319
08:00 AM	18	4	8	0	30	11	18	4	1	34	1	36	35	0	72	114	60	5	0	179	315
08:15 AM	20	4	15	0	39	9	10	2	0	21	0	33	33	0	66	120	52	0	0	172	298
08:30 AM	23	11	23	5	62	5	18	2	2	27	0	35	51	0	86	80	34	7	1	122	297
08:45 AM	18	9	16	0	43	4	13	0	1	18	0	30	37	0	67	77	39	1	0	117	245
Total	79	28	62	5	174	29	59	8	4	100	1	134	156	0	291	391	185	13	1	590	1155
*** BREAK ***																					
11:00 AM	16	2	26	1	45	2	2	1	2	7	0	41	28	0	69	14	21	2	0	37	158
11:15 AM	21	8	21	0	50	3	3	0	0	6	0	43	29	2	74	10	25	2	1	38	168
11:30 AM	17	3	24	0	44	3	6	2	0	11	0	63	35	1	99	11	30	3	1	45	199
11:45 AM	29	4	20	0	53	0	8	2	0	10	1	62	33	0	96	19	27	3	0	49	208
Total	83	17	91	1	192	8	19	5	2	34	1	209	125	3	338	54	103	10	2	169	733
12:00 PM	29	8	17	0	54	3	1	0	0	4	2	42	39	0	83	18	26	3	0	47	188
12:15 PM	17	5	17	0	39	2	2	1	0	5	0	42	29	0	71	21	38	2	0	61	176
12:30 PM	33	8	24	0	65	6	3	0	0	9	4	39	28	1	72	29	31	2	0	62	208
12:45 PM	20	4	17	0	41	3	2	0	0	5	0	47	36	0	83	19	28	5	0	52	181
Total	99	25	75	0	199	14	8	1	0	23	6	170	132	1	309	87	123	12	0	222	753
*** BREAK ***																					
04:00 PM	45	15	113	0	173	7	6	1	0	14	2	68	30	0	100	22	42	0	0	64	351
04:15 PM	41	22	131	2	196	5	3	1	0	9	2	78	27	0	107	18	14	7	0	39	351
04:30 PM	45	22	106	1	174	3	1	1	0	5	1	64	46	3	114	14	36	3	0	53	346
04:45 PM	32	36	126	0	194	10	4	0	0	14	0	66	22	0	88	14	17	3	0	34	330
Total	163	95	476	3	737	25	14	3	0	42	5	276	125	3	409	68	109	13	0	190	1378
05:00 PM	52	36	136	0	224	5	5	3	0	13	1	72	39	0	112	13	15	1	0	29	378
05:15 PM	43	26	128	0	197	6	5	1	0	12	0	88	37	0	125	13	15	7	0	35	369
05:30 PM	57	37	154	0	248	5	6	2	0	13	1	66	16	0	83	9	12	2	1	24	368
05:45 PM	56	45	134	0	235	2	4	1	0	7	1	96	27	0	124	20	34	7	0	61	427
Total	208	144	552	0	904	18	20	7	0	45	3	322	119	0	444	55	76	17	1	149	1542
Grand Total	694	352	1294	10	2350	107	171	28	15	321	17	1178	783	7	1985	1271	871	78	4	2224	6880
Apprch %	29.5	15	55.1	0.4		33.3	53.3	8.7	4.7		0.9	59.3	39.4	0.4		57.1	39.2	3.5	0.2		
Total %	10.1	5.1	18.8	0.1	34.2	1.6	2.5	0.4	0.2	4.7	0.2	17.1	11.4	0.1	28.9	18.5	12.7	1.1	0.1	32.3	
Veh	687	349	1253	10	2299	107	170	26	11	314	17	1161	778	3	1959	1240	839	76	4	2159	6731
% Veh	99	99.1	96.8	100	97.8	100	99.4	92.9	73.3	97.8	100	98.6	99.4	42.9	98.7	97.6	96.3	97.4	100	97.1	97.8
Trucks	7	3	41	0	51	0	1	2	2	5	0	17	5	4	26	31	32	2	0	65	147
% Trucks	1	0.9	3.2	0	2.2	0	0.6	7.1	13.3	1.6	0	1.4	0.6	57.1	1.3	2.4	3.7	2.6	0	2.9	2.1

SW 152nd Street & SW 77th Avenue

File Name : SW 152nd Street & SW 77th Avenue
Site Code : 00000000
Start Date : 5/26/2016
Page No : 2

Groups Printed- Veh - Trucks - Turns

	SW 77th Avenue Southbound					SW 77th Avenue Northbound					SW 152nd Street Westbound					SW 152nd Street Eastbound					
	Left	Thru	RIght	Peds/Bike	App. Total	Left	Thru	RIght	Peds/Bike	App. Total	Left	Thru	RIght	Peds/Bike	App. Total	Left	Thru	RIght	Peds/Bike	App. Total	Int. Total
U-Turns	0	0	0	0	0	0	0	0	2	2	0	0	0	0	0	0	0	0	0	0	2
% U-Turns	0	0	0	0	0	0	0	0	13.3	0.6	0	0	0	0	0	0	0	0	0	0	0

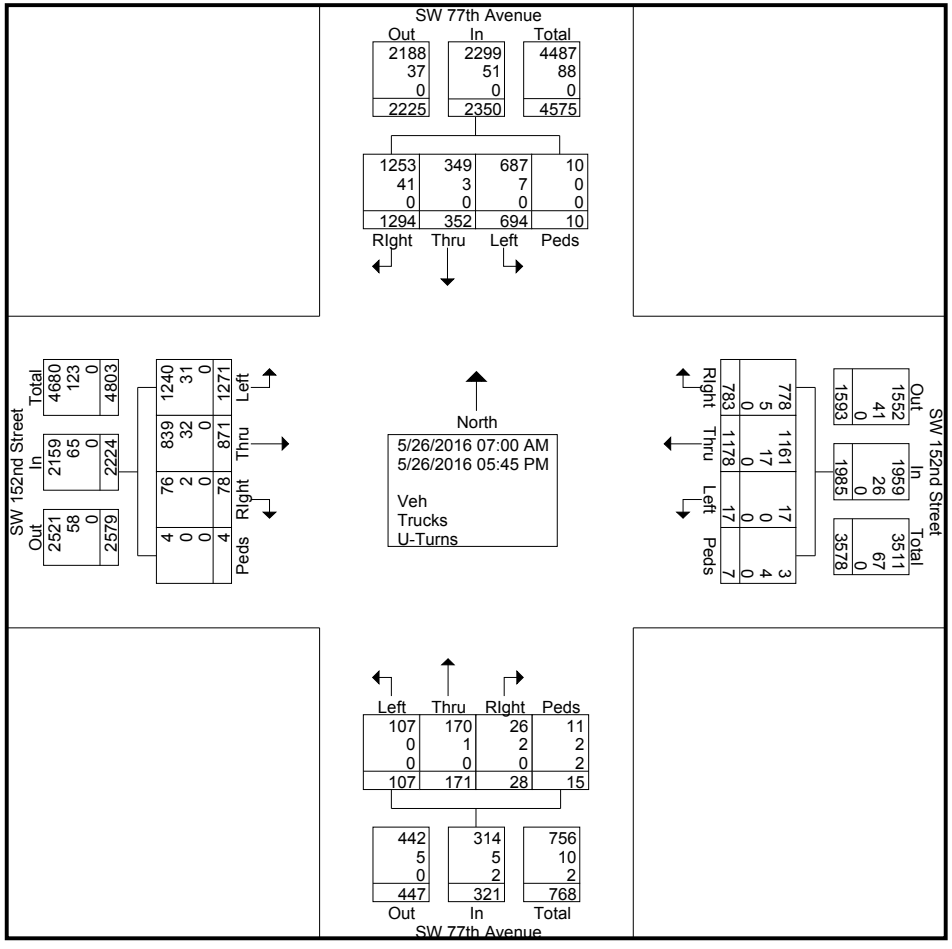

SW 152nd Street & SW 77th Avenue

File Name : SW 152nd Street & SW 77th Avenue
Site Code : 00000000
Start Date : 5/26/2016
Page No : 3

	SW 77th Avenue Southbound					SW 77th Avenue Northbound					SW 152nd Street Westbound					SW 152nd Street Eastbound					
Start Time	Left	Thru	RIght	Peds/Bike	App. Total	Left	Thru	RIght	Peds/Bike	App. Total	Left	Thru	RIght	Peds/Bike	App. Total	Left	Thru	RIght	Peds/Bike	App. Total	Int. Total
Peak Hour Analysis From 07:00 AM to 08:45 AM - Peak 1 of 1																					
Peak Hour for Entire Intersection Begins at 07:15 AM																					
07:15 AM	**20**	12	**12**	0	**44**	3	15	1	**4**	23	0	13	26	0	39	**159**	**78**	4	0	**241**	**347**
07:30 AM	14	**14**	6	**1**	35	1	8	0	3	12	0	18	**36**	0	54	159	71	**5**	0	235	336
07:45 AM	18	10	7	0	35	6	**20**	1	1	28	0	22	28	0	50	143	75	2	0	220	333
08:00 AM	18	4	8	0	30	**11**	18	**4**	1	**34**	**1**	**36**	35	0	**72**	114	60	5	0	179	315
Total Volume	70	40	33	1	144	21	61	6	9	97	1	89	125	0	215	575	284	16	0	875	1331
% App. Total	48.6	27.8	22.9	0.7		21.6	62.9	6.2	9.3		0.5	41.4	58.1	0		65.7	32.5	1.8	0		
PHF	.875	.714	.688	.250	.818	.477	.763	.375	.563	.713	.250	.618	.868	.000	.747	.904	.910	.800	.000	.908	.959

SW 152nd Street & SW 77th Avenue

File Name : SW 152nd Street & SW 77th Avenue
Site Code : 00000000
Start Date : 5/26/2016
Page No : 4

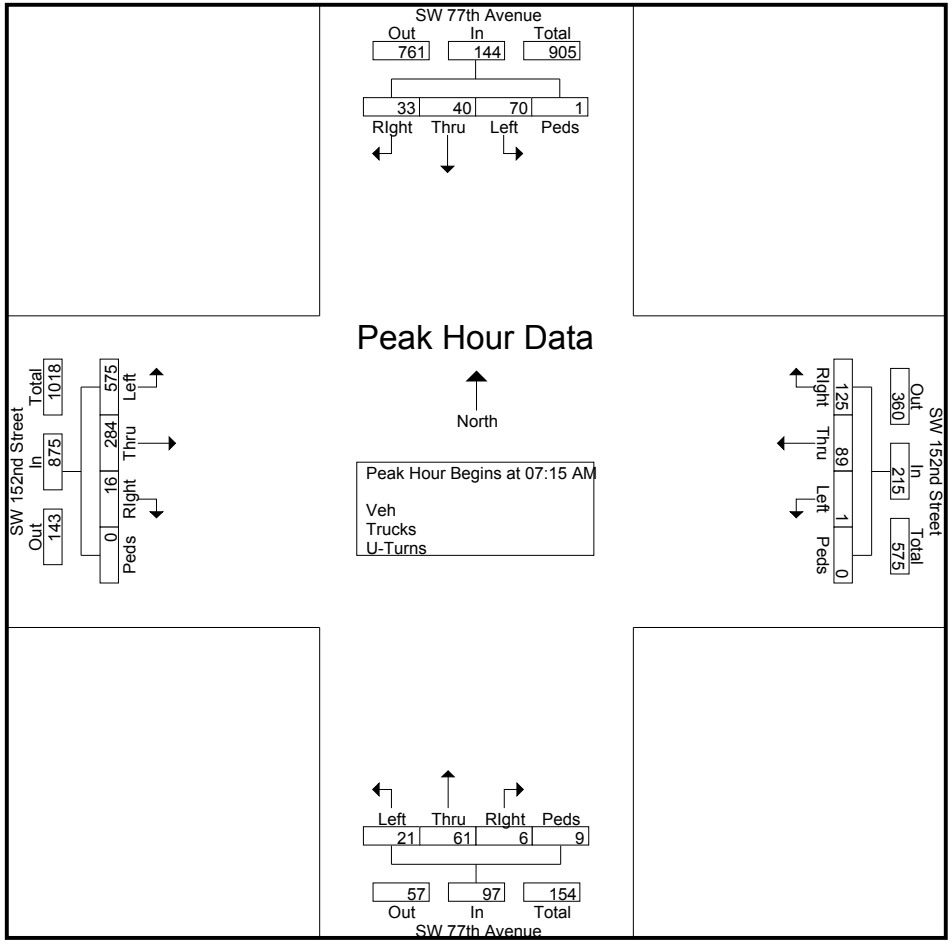

SW 152nd Street & SW 77th Avenue

File Name : SW 152nd Street & SW 77th Avenue
Site Code : 00000000
Start Date : 5/26/2016
Page No : 5

	SW 77th Avenue Southbound					SW 77th Avenue Northbound					SW 152nd Street Westbound					SW 152nd Street Eastbound					
Start Time	Left	Thru	RIght	Peds/Bike	App. Total	Left	Thru	RIght	Peds/Bike	App. Total	Left	Thru	RIght	Peds/Bike	App. Total	Left	Thru	RIght	Peds/Bike	App. Total	Int. Total
Peak Hour Analysis From 11:00 AM to 12:45 PM - Peak 1 of 1																					
Peak Hour for Entire Intersection Begins at 11:45 AM																					
11:45 AM	29	4	20	0	53	0	**8**	**2**	0	**10**	1	**62**	33	0	**96**	19	27	**3**	0	49	**208**
12:00 PM	29	**8**	17	0	54	3	1	0	0	4	2	42	**39**	0	83	18	26	3	0	47	188
12:15 PM	17	5	17	0	39	2	2	1	0	5	0	42	29	0	71	21	**38**	2	0	61	176
12:30 PM	**33**	8	**24**	0	**65**	**6**	3	0	0	9	**4**	39	28	**1**	72	**29**	31	2	0	**62**	208
Total Volume	108	25	78	0	211	11	14	3	0	28	7	185	129	1	322	87	122	10	0	219	780
% App. Total	51.2	11.8	37	0		39.3	50	10.7	0		2.2	57.5	40.1	0.3		39.7	55.7	4.6	0		
PHF	.818	.781	.813	.000	.812	.458	.438	.375	.000	.700	.438	.746	.827	.250	.839	.750	.803	.833	.000	.883	.938

SW 152nd Street & SW 77th Avenue

File Name : SW 152nd Street & SW 77th Avenue
Site Code : 00000000
Start Date : 5/26/2016
Page No : 6

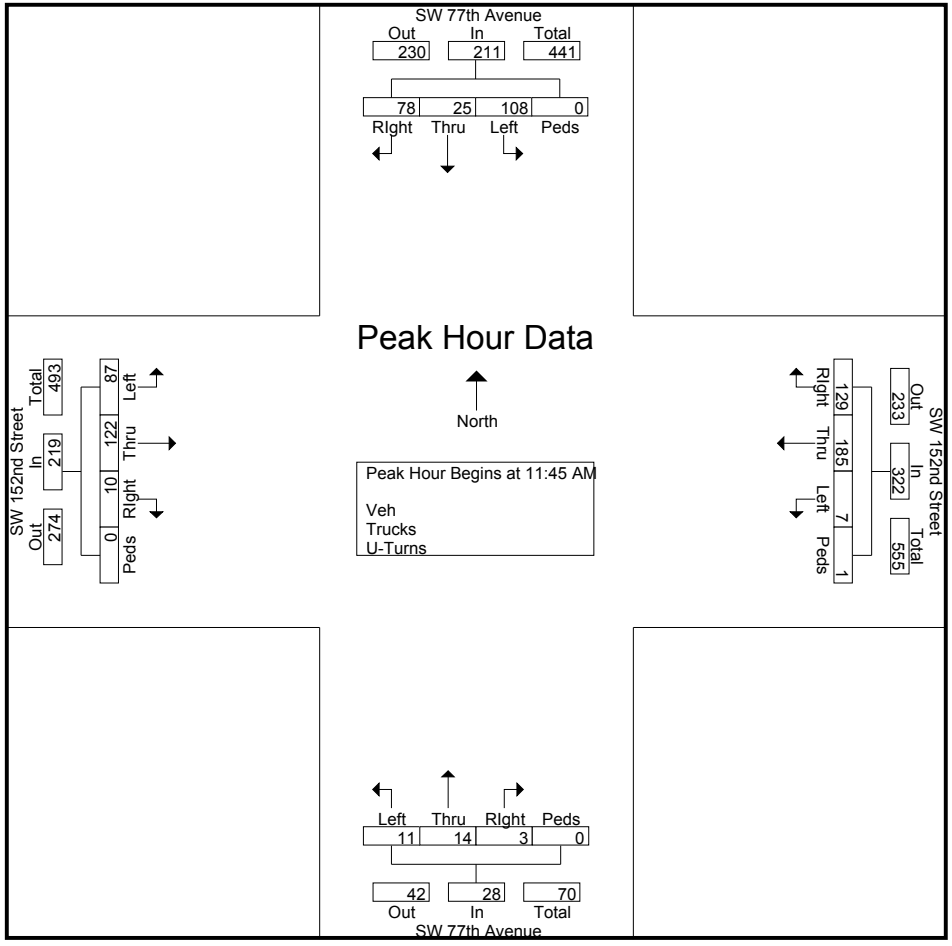

SW 152nd Street & SW 77th Avenue

File Name : SW 152nd Street & SW 77th Avenue
Site Code : 00000000
Start Date : 5/26/2016
Page No : 7

	SW 77th Avenue Southbound					SW 77th Avenue Northbound					SW 152nd Street Westbound					SW 152nd Street Eastbound					
Start Time	Left	Thru	RIght	Peds/Bike	App. Total	Left	Thru	RIght	Peds/Bike	App. Total	Left	Thru	RIght	Peds/Bike	App. Total	Left	Thru	RIght	Peds/Bike	App. Total	Int. Total
Peak Hour Analysis From 04:00 PM to 05:45 PM - Peak 1 of 1																					
Peak Hour for Entire Intersection Begins at 05:00 PM																					
05:00 PM	52	36	136	0	224	5	5	**3**	0	**13**	**1**	72	**39**	0	112	13	15	1	0	29	378
05:15 PM	43	26	128	0	197	**6**	5	1	0	12	0	88	37	0	**125**	13	15	**7**	0	35	369
05:30 PM	**57**	37	**154**	0	**248**	5	**6**	2	0	13	1	66	16	0	83	9	12	2	**1**	24	368
05:45 PM	56	**45**	134	0	235	2	4	1	0	7	1	**96**	27	0	124	**20**	**34**	7	0	**61**	**427**
Total Volume	208	144	552	0	904	18	20	7	0	45	3	322	119	0	444	55	76	17	1	149	1542
% App. Total	23	15.9	61.1	0		40	44.4	15.6	0		0.7	72.5	26.8	0		36.9	51	11.4	0.7		
PHF	.912	.800	.896	.000	.911	.750	.833	.583	.000	.865	.750	.839	.763	.000	.888	.688	.559	.607	.250	.611	.903

SW 152nd Street & SW 77th Avenue

File Name : SW 152nd Street & SW 77th Avenue
Site Code : 00000000
Start Date : 5/26/2016
Page No : 8

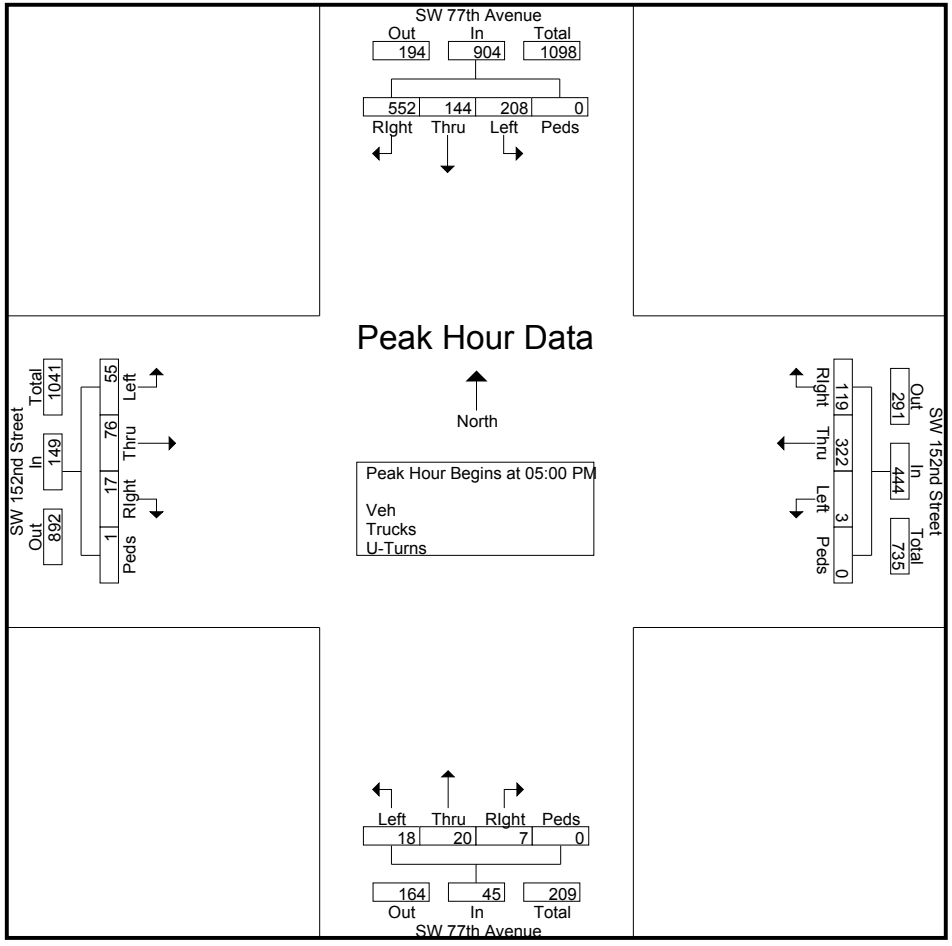

SW 152nd Street & SW 82nd Avenue

File Name : SW 152nd St & SW 82nd Avenue
Site Code : 00000000
Start Date : 5/26/2016
Page No : 1

Groups Printed- Trucks

	SW 82nd Avenue Southbound					SW 82nd Avenue Northbound					SW 152nd Street Westbound					SW 152nd Street Eastbound					
Start Time	Left	Thru	RIght	Bikes	App. Total	Left	Thru	RIght	Bikes	App. Total	Left	Thru	RIght	Bikes	App. Total	Left	Thru	RIght	Bikes	App. Total	Int. Total
07:00 AM	0	0	0	0	0	0	3	0	0	3	0	3	0	0	3	0	6	0	0	6	12
07:15 AM	0	1	0	0	1	1	0	0	1	2	0	3	0	0	3	1	6	0	0	7	13
07:30 AM	0	1	0	0	1	0	2	0	1	3	0	1	0	0	1	1	4	1	0	6	11
07:45 AM	0	0	0	0	0	1	0	0	0	1	0	2	0	0	2	0	6	0	0	6	9
Total	0	2	0	0	2	2	5	0	2	9	0	9	0	0	9	2	22	1	0	25	45
08:00 AM	0	2	1	2	5	0	1	0	1	2	0	3	1	0	4	1	0	1	1	3	14
08:15 AM	0	0	0	0	0	0	1	1	1	3	0	4	0	0	4	1	3	0	0	4	11
08:30 AM	0	1	0	0	1	0	0	0	1	1	0	3	0	0	3	2	6	1	0	9	14
08:45 AM	0	1	0	0	1	1	0	1	0	2	0	1	0	0	1	0	5	0	0	5	9
Total	0	4	1	2	7	1	2	2	3	8	0	11	1	0	12	4	14	2	1	21	48
*** BREAK ***																					
11:00 AM	0	1	0	0	1	0	0	0	0	0	3	2	0	0	5	0	3	0	0	3	9
11:15 AM	0	0	1	0	1	0	0	0	0	0	0	0	0	0	0	0	4	1	0	5	6
11:30 AM	1	1	0	0	2	0	0	0	0	0	0	1	0	0	1	0	3	1	0	4	7
11:45 AM	0	0	0	0	0	0	0	0	0	0	0	3	0	0	3	0	5	1	0	6	9
Total	1	2	1	0	4	0	0	0	0	0	3	6	0	0	9	0	15	3	0	18	31
12:00 PM	0	0	0	0	0	0	0	0	0	0	0	4	0	0	4	0	1	0	0	1	5
12:15 PM	0	0	0	0	0	0	0	1	0	1	0	0	0	0	0	1	1	1	0	3	4
12:30 PM	0	2	0	0	2	0	0	0	0	0	0	0	2	0	2	0	1	2	0	3	7
12:45 PM	0	0	0	0	0	0	1	1	0	2	0	2	0	0	2	0	5	0	0	5	9
Total	0	2	0	0	2	0	1	2	0	3	0	6	2	0	8	1	8	3	0	12	25
*** BREAK ***																					
04:00 PM	0	0	0	0	0	1	0	2	0	3	2	2	0	0	4	1	2	2	0	5	12
04:15 PM	0	1	0	0	1	1	0	0	0	1	1	3	0	0	4	0	2	1	0	3	9
04:30 PM	0	2	0	0	2	0	0	0	0	0	0	4	0	0	4	0	0	0	0	0	6
04:45 PM	0	0	0	0	0	1	0	0	0	1	0	3	0	0	3	1	2	0	0	3	7
Total	0	3	0	0	3	3	0	2	0	5	3	12	0	0	15	2	6	3	0	11	34
05:00 PM	0	0	0	0	0	0	0	0	0	0	2	2	1	0	5	0	5	0	0	5	10
05:15 PM	0	0	0	0	0	0	0	0	0	0	2	2	0	0	4	0	0	0	0	0	4
05:30 PM	0	2	0	0	2	0	0	0	2	2	2	1	0	0	3	0	0	0	0	0	7
05:45 PM	0	1	0	0	1	0	0	0	0	0	1	0	0	0	1	0	0	0	0	0	2
Total	0	3	0	0	3	0	0	0	2	2	7	5	1	0	13	0	5	0	0	5	23
Grand Total	1	16	2	2	21	6	8	6	7	27	13	49	4	0	66	9	70	12	1	92	206
Apprch %	4.8	76.2	9.5	9.5		22.2	29.6	22.2	25.9		19.7	74.2	6.1	0		9.8	76.1	13	1.1		
Total %	0.5	7.8	1	1	10.2	2.9	3.9	2.9	3.4	13.1	6.3	23.8	1.9	0	32	4.4	34	5.8	0.5	44.7	

SW 152nd Street & SW 82nd Avenue

File Name : SW 152nd St & SW 82nd Avenue
Site Code : 00000000
Start Date : 5/26/2016
Page No : 2

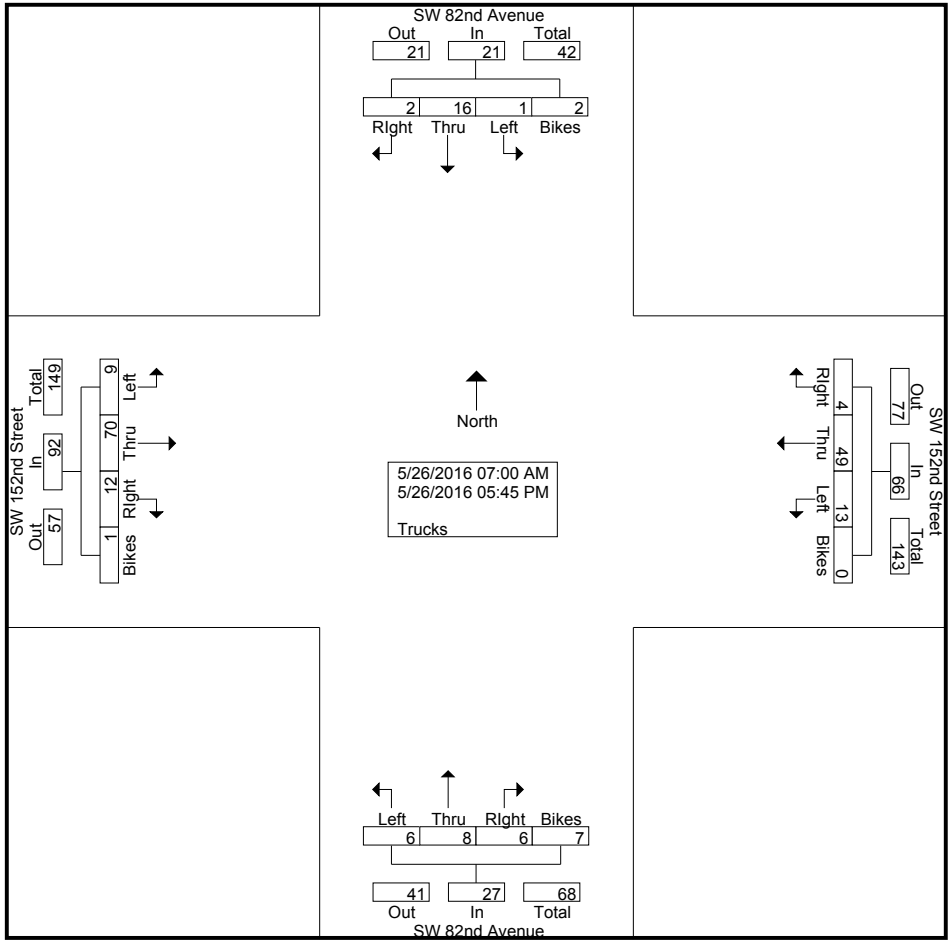

SW 152nd Street & SW 82nd Avenue

File Name : SW 152nd St & SW 82nd Avenue
Site Code : 00000000
Start Date : 5/26/2016
Page No : 3

	SW 82nd Avenue Southbound					SW 82nd Avenue Northbound					SW 152nd Street Westbound					SW 152nd Street Eastbound					
Start Time	Left	Thru	RIght	Bikes	App. Total	Left	Thru	RIght	Bikes	App. Total	Left	Thru	RIght	Bikes	App. Total	Left	Thru	RIght	Bikes	App. Total	Int. Total
Peak Hour Analysis From 07:00 AM to 08:45 AM - Peak 1 of 1																					
Peak Hour for Entire Intersection Begins at 07:45 AM																					
07:45 AM	0	0	0	0	0	**1**	0	0	0	1	0	2	0	0	2	0	**6**	0	0	6	9
08:00 AM	0	**2**	**1**	**2**	**5**	0	**1**	0	**1**	2	0	3	**1**	0	**4**	1	0	**1**	**1**	3	**14**
08:15 AM	0	0	0	0	0	0	1	**1**	1	**3**	0	**4**	0	0	4	1	3	0	0	4	11
08:30 AM	0	1	0	0	1	0	0	0	1	1	0	3	0	0	3	**2**	6	1	0	**9**	14
Total Volume	0	3	1	2	6	1	2	1	3	7	0	12	1	0	13	4	15	2	1	22	48
% App. Total	0	50	16.7	33.3		14.3	28.6	14.3	42.9		0	92.3	7.7	0		18.2	68.2	9.1	4.5		
PHF	.000	.375	.250	.250	.300	.250	.500	.250	.750	.583	.000	.750	.250	.000	.813	.500	.625	.500	.250	.611	.857

SW 152nd Street & SW 82nd Avenue

File Name : SW 152nd St & SW 82nd Avenue
Site Code : 00000000
Start Date : 5/26/2016
Page No : 4

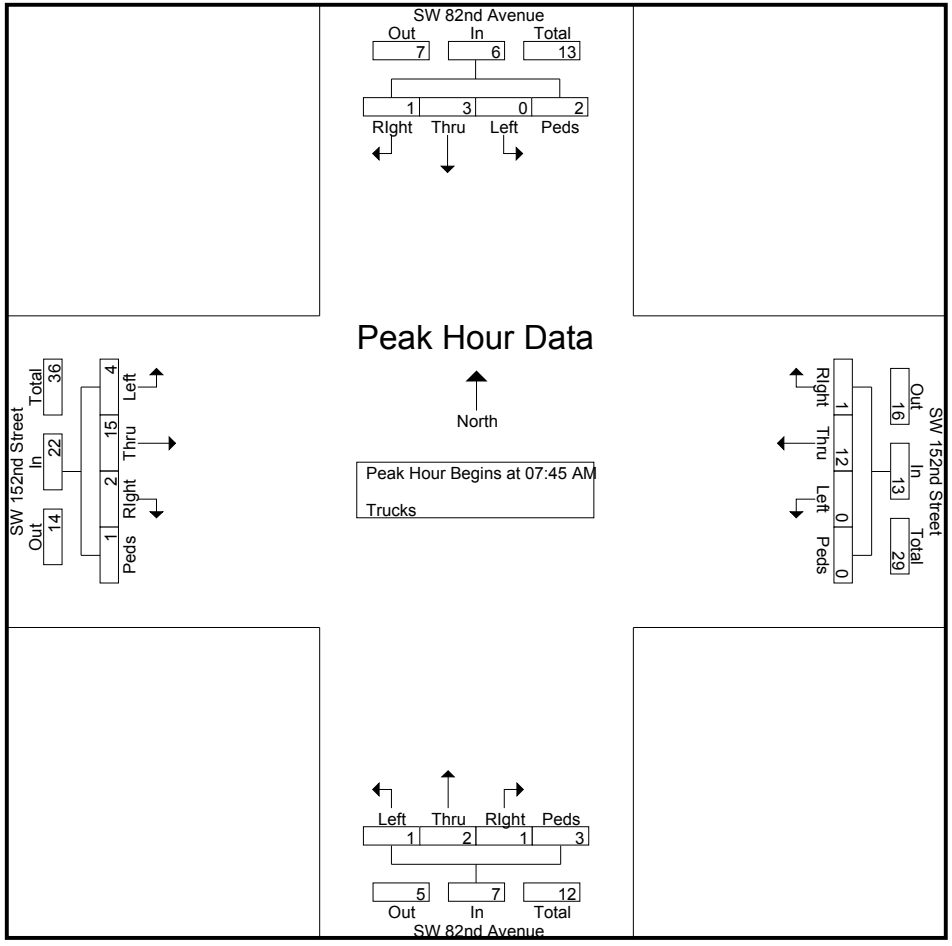

SW 152nd Street & SW 82nd Avenue

File Name : SW 152nd St & SW 82nd Avenue
Site Code : 00000000
Start Date : 5/26/2016
Page No : 5

	SW 82nd Avenue Southbound					SW 82nd Avenue Northbound					SW 152nd Street Westbound					SW 152nd Street Eastbound					
Start Time	Left	Thru	RIght	Bikes	App. Total	Left	Thru	RIght	Bikes	App. Total	Left	Thru	RIght	Bikes	App. Total	Left	Thru	RIght	Bikes	App. Total	Int. Total
Peak Hour Analysis From 11:00 AM to 12:45 PM - Peak 1 of 1																					
Peak Hour for Entire Intersection Begins at 11:00 AM																					
11:00 AM	0	**1**	0	0	1	0	0	0	0	0	**3**	2	0	0	**5**	0	3	0	0	3	**9**
11:15 AM	0	0	**1**	0	1	0	0	0	0	0	0	0	0	0	0	0	4	**1**	0	5	6
11:30 AM	**1**	1	0	0	**2**	0	0	0	0	0	0	1	0	0	1	0	3	1	0	4	7
11:45 AM	0	0	0	0	0	0	0	0	0	0	0	**3**	0	0	3	0	**5**	1	0	**6**	9
Total Volume	1	2	1	0	4	0	0	0	0	0	3	6	0	0	9	0	15	3	0	18	31
% App. Total	25	50	25	0		0	0	0	0		33.3	66.7	0	0		0	83.3	16.7	0		
PHF	.250	.500	.250	.000	.500	.000	.000	.000	.000	.000	.250	.500	.000	.000	.450	.000	.750	.750	.000	.750	.861

SW 152nd Street & SW 82nd Avenue

File Name : SW 152nd St & SW 82nd Avenue
Site Code : 00000000
Start Date : 5/26/2016
Page No : 6

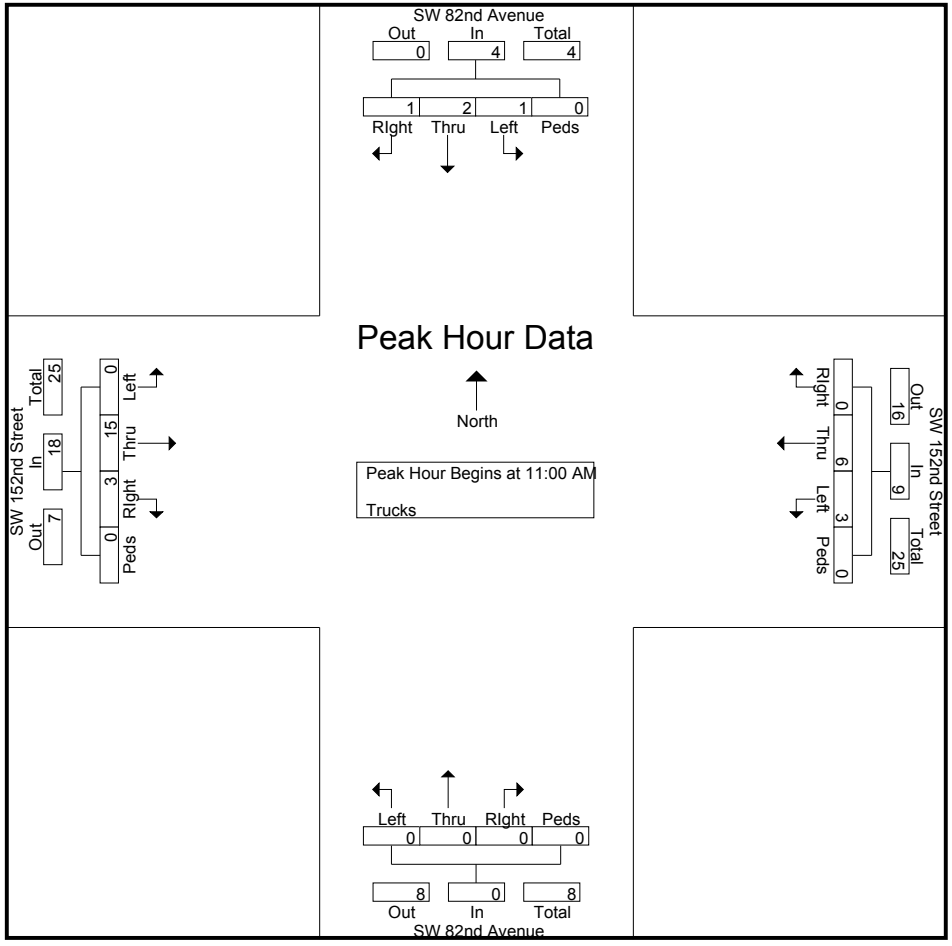

SW 152nd Street & SW 82nd Avenue

File Name : SW 152nd St & SW 82nd Avenue
Site Code : 00000000
Start Date : 5/26/2016
Page No : 7

	SW 82nd Avenue Southbound					SW 82nd Avenue Northbound					SW 152nd Street Westbound					SW 152nd Street Eastbound					
Start Time	Left	Thru	RIght	Bikes	App. Total	Left	Thru	RIght	Bikes	App. Total	Left	Thru	RIght	Bikes	App. Total	Left	Thru	RIght	Bikes	App. Total	Int. Total
Peak Hour Analysis From 04:00 PM to 05:45 PM - Peak 1 of 1																					
Peak Hour for Entire Intersection Begins at 04:00 PM																					
04:00 PM	0	0	0	0	0	**1**	0	**2**	0	**3**	**2**	2	0	0	**4**	**1**	**2**	**2**	0	**5**	**12**
04:15 PM	0	1	0	0	1	1	0	0	0	1	1	3	0	0	4	0	2	1	0	3	9
04:30 PM	0	**2**	0	0	**2**	0	0	0	0	0	0	**4**	0	0	4	0	0	0	0	0	6
04:45 PM	0	0	0	0	0	1	0	0	0	1	0	3	0	0	3	1	2	0	0	3	7
Total Volume	0	3	0	0	3	3	0	2	0	5	3	12	0	0	15	2	6	3	0	11	34
% App. Total	0	100	0	0		60	0	40	0		20	80	0	0		18.2	54.5	27.3	0		
PHF	.000	.375	.000	.000	.375	.750	.000	.250	.000	.417	.375	.750	.000	.000	.938	.500	.750	.375	.000	.550	.708

SW 152nd Street & SW 82nd Avenue

File Name : SW 152nd St & SW 82nd Avenue
Site Code : 00000000
Start Date : 5/26/2016
Page No : 8

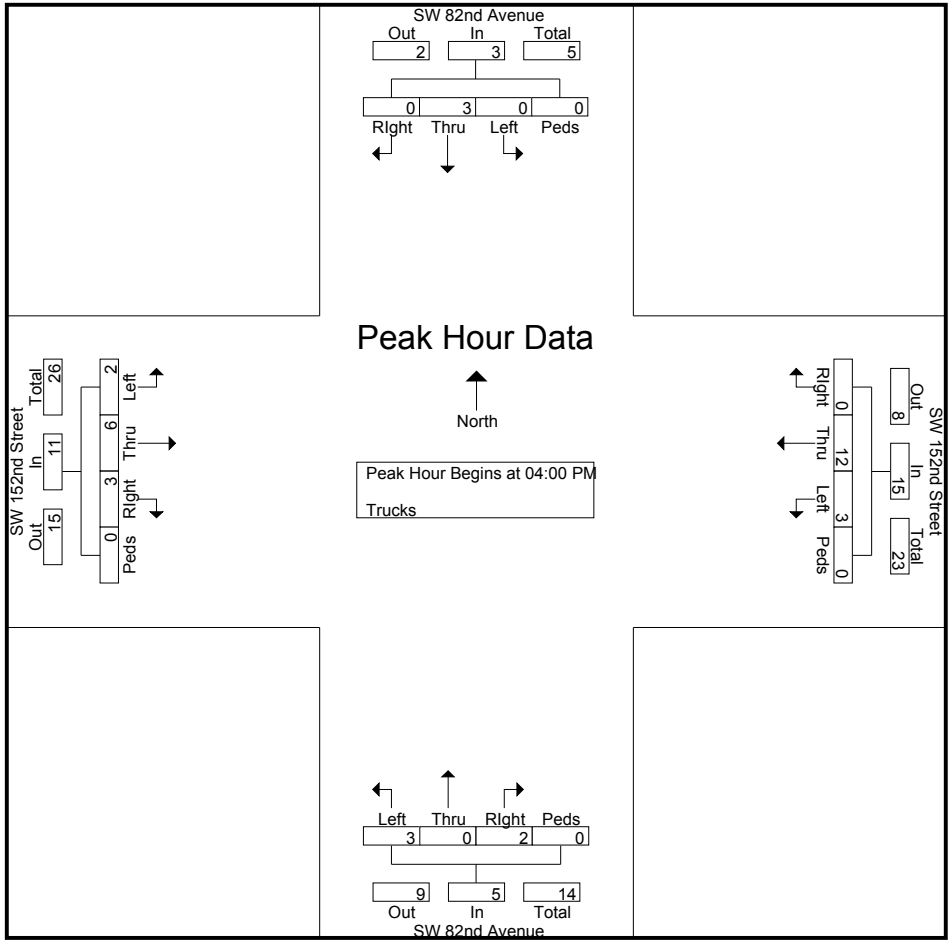

SW 152nd Street & SW 82nd Avenue

File Name : SW 152nd St & SW 82nd Avenue
Site Code : 00000000
Start Date : 5/26/2016
Page No : 1

Groups Printed- Turns

	SW 82nd Avenue Southbound					SW 82nd Avenue Northbound					SW 152nd Street Westbound					SW 152nd Street Eastbound					
Start Time	Left	Thru	Right	Peds/Bike	App. Total	Left	Thru	Right	Peds/Bike	App. Total	Left	Thru	Right	Peds/Bike	App. Total	Left	Thru	Right	Peds/Bike	App. Total	Int. Total
*** BREAK ***																					
Grand Total	0	0	0	0	0	0	0	0	0	0	0	0	0	0	0	0	0	0	0	0	0
Apprch %	0	0	0	0		0	0	0	0		0	0	0	0		0	0	0	0		
Total %																					

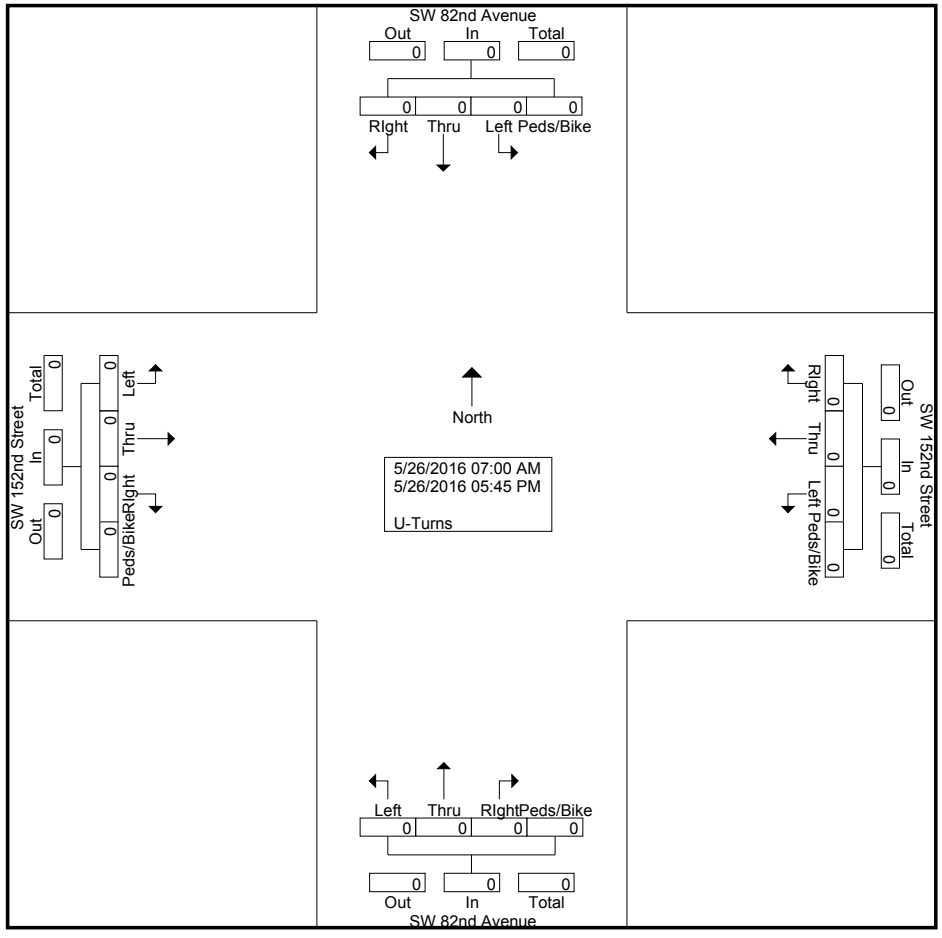

SW 152nd Street & SW 82nd Avenue

File Name : SW 152nd St & SW 82nd Avenue
Site Code : 00000000
Start Date : 5/26/2016
Page No : 2

	SW 82nd Avenue Southbound					SW 82nd Avenue Northbound					SW 152nd Street Westbound					SW 152nd Street Eastbound					
Start Time	Left	Thru	RIght	Peds/Bike	App. Total	Left	Thru	RIght	Peds/Bike	App. Total	Left	Thru	RIght	Peds/Bike	App. Total	Left	Thru	RIght	Peds/Bike	App. Total	Int. Total
Peak Hour Analysis From 07:00 AM to 08:45 AM - Peak 1 of 1																					
Peak Hour for Entire Intersection Begins at 07:00 AM																					
07:00 AM	0	0	0	0	0	0	0	0	0	0	0	0	0	0	0	0	0	0	0	0	0
07:15 AM	0	0	0	0	0	0	0	0	0	0	0	0	0	0	0	0	0	0	0	0	0
07:30 AM	0	0	0	0	0	0	0	0	0	0	0	0	0	0	0	0	0	0	0	0	0
07:45 AM	0	0	0	0	0	0	0	0	0	0	0	0	0	0	0	0	0	0	0	0	0
Total Volume	0	0	0	0	0	0	0	0	0	0	0	0	0	0	0	0	0	0	0	0	0
% App. Total	0	0	0	0		0	0	0	0		0	0	0	0		0	0	0	0		
PHF	.000	.000	.000	.000	.000	.000	.000	.000	.000	.000	.000	.000	.000	.000	.000	.000	.000	.000	.000	.000	.000

SW 152nd Street & SW 82nd Avenue

File Name : SW 152nd St & SW 82nd Avenue
Site Code : 00000000
Start Date : 5/26/2016
Page No : 3

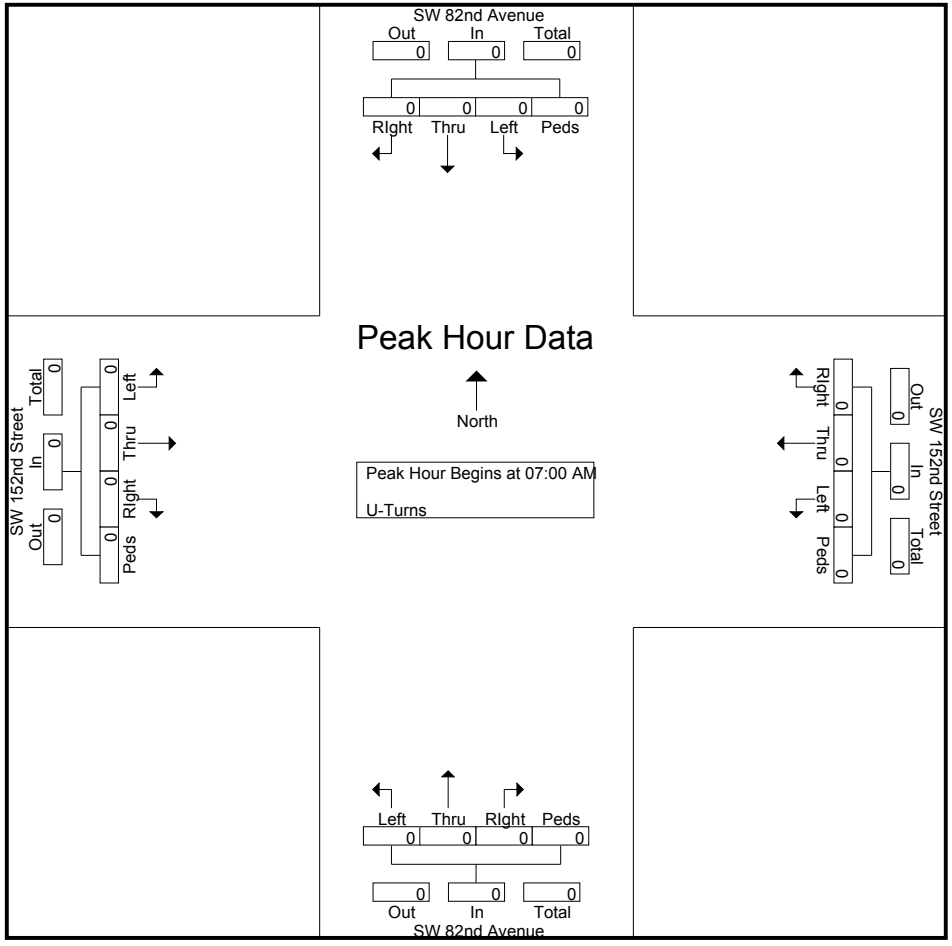

SW 152nd Street & SW 82nd Avenue

File Name : SW 152nd St & SW 82nd Avenue
Site Code : 00000000
Start Date : 5/26/2016
Page No : 4

	SW 82nd Avenue Southbound					SW 82nd Avenue Northbound					SW 152nd Street Westbound					SW 152nd Street Eastbound					
Start Time	Left	Thru	RIght	Peds/Bike	App. Total	Left	Thru	RIght	Peds/Bike	App. Total	Left	Thru	RIght	Peds/Bike	App. Total	Left	Thru	RIght	Peds/Bike	App. Total	Int. Total
Peak Hour Analysis From 11:00 AM to 12:45 PM - Peak 1 of 1																					
Peak Hour for Entire Intersection Begins at 11:00 AM																					
11:00 AM	0	0	0	0	0	0	0	0	0	0	0	0	0	0	0	0	0	0	0	0	0
11:15 AM	0	0	0	0	0	0	0	0	0	0	0	0	0	0	0	0	0	0	0	0	0
11:30 AM	0	0	0	0	0	0	0	0	0	0	0	0	0	0	0	0	0	0	0	0	0
11:45 AM	0	0	0	0	0	0	0	0	0	0	0	0	0	0	0	0	0	0	0	0	0
Total Volume	0	0	0	0	0	0	0	0	0	0	0	0	0	0	0	0	0	0	0	0	0
% App. Total	0	0	0	0		0	0	0	0		0	0	0	0		0	0	0	0		
PHF	.000	.000	.000	.000	.000	.000	.000	.000	.000	.000	.000	.000	.000	.000	.000	.000	.000	.000	.000	.000	.000

SW 152nd Street & SW 82nd Avenue

File Name : SW 152nd St & SW 82nd Avenue
Site Code : 00000000
Start Date : 5/26/2016
Page No : 5

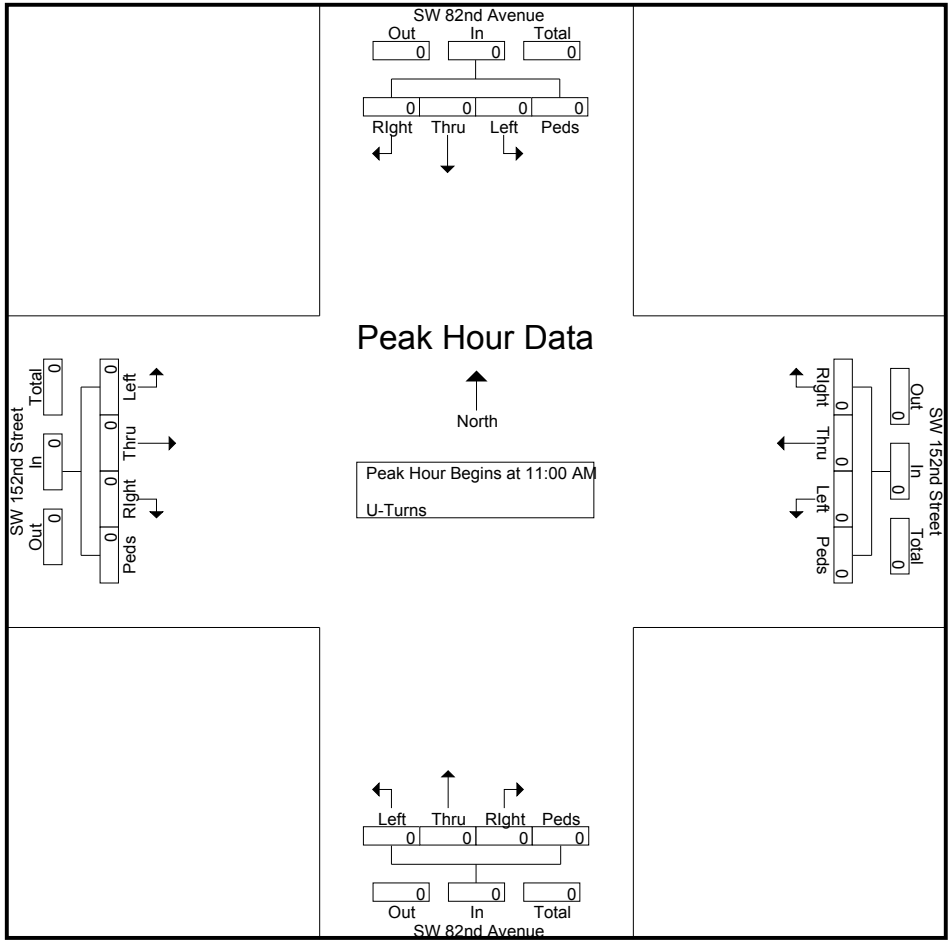

SW 152nd Street & SW 82nd Avenue

File Name : SW 152nd St & SW 82nd Avenue
Site Code : 00000000
Start Date : 5/26/2016
Page No : 6

	SW 82nd Avenue Southbound					SW 82nd Avenue Northbound					SW 152nd Street Westbound					SW 152nd Street Eastbound					
Start Time	Left	Thru	RIght	Peds/Bike	App. Total	Left	Thru	RIght	Peds/Bike	App. Total	Left	Thru	RIght	Peds/Bike	App. Total	Left	Thru	RIght	Peds/Bike	App. Total	Int. Total
Peak Hour Analysis From 04:00 PM to 05:45 PM - Peak 1 of 1																					
Peak Hour for Entire Intersection Begins at 04:00 PM																					
04:00 PM	0	0	0	0	0	0	0	0	0	0	0	0	0	0	0	0	0	0	0	0	0
04:15 PM	0	0	0	0	0	0	0	0	0	0	0	0	0	0	0	0	0	0	0	0	0
04:30 PM	0	0	0	0	0	0	0	0	0	0	0	0	0	0	0	0	0	0	0	0	0
04:45 PM	0	0	0	0	0	0	0	0	0	0	0	0	0	0	0	0	0	0	0	0	0
Total Volume	0	0	0	0	0	0	0	0	0	0	0	0	0	0	0	0	0	0	0	0	0
% App. Total	0	0	0	0		0	0	0	0		0	0	0	0		0	0	0	0		
PHF	.000	.000	.000	.000	.000	.000	.000	.000	.000	.000	.000	.000	.000	.000	.000	.000	.000	.000	.000	.000	.000

SW 152nd Street & SW 82nd Avenue

File Name : SW 152nd St & SW 82nd Avenue
Site Code : 00000000
Start Date : 5/26/2016
Page No : 7

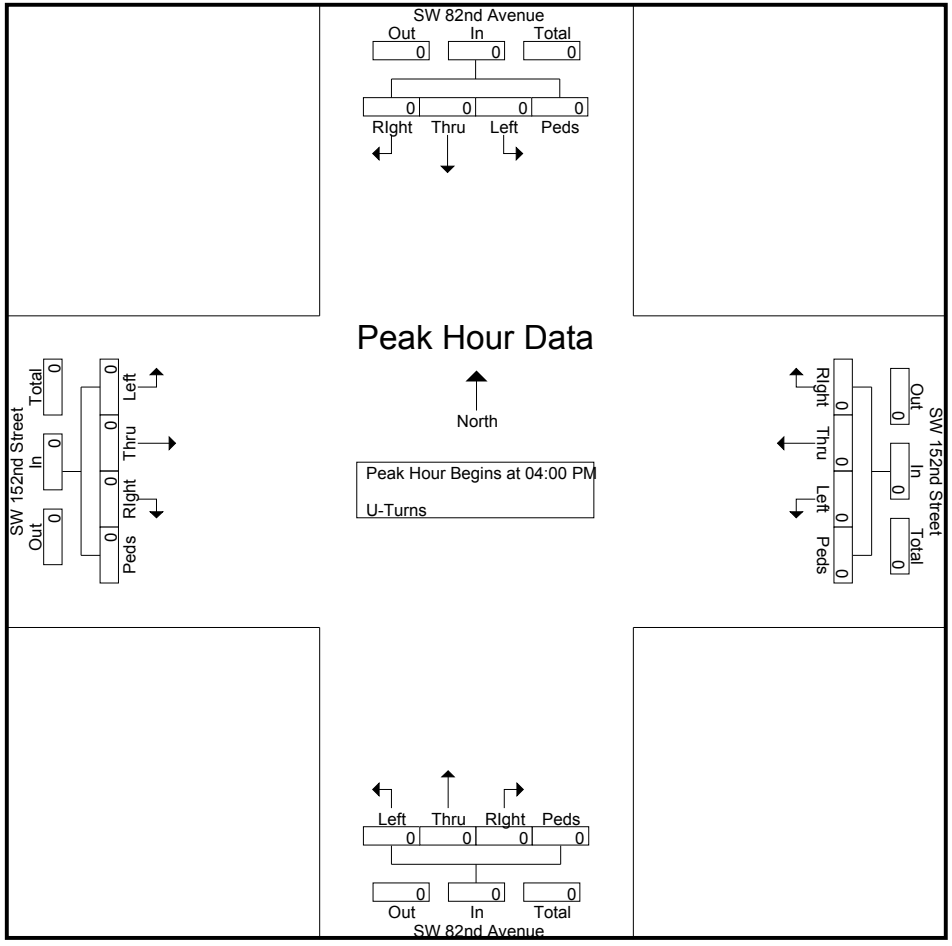

SW 152nd Street & SW 82nd Avenue

File Name : SW 152nd St & SW 82nd Avenue
Site Code : 00000000
Start Date : 5/26/2016
Page No : 1

Groups Printed- Veh - Trucks - Turns

	SW 82nd Avenue Southbound					SW 82nd Avenue Northbound					SW 152nd Street Westbound					SW 152nd Street Eastbound					
Start Time	Left	Thru	RIght	Peds/Bike	App. Total	Left	Thru	RIght	Peds/Bike	App. Total	Left	Thru	RIght	Peds/Bike	App. Total	Left	Thru	RIght	Peds/Bike	App. Total	Int. Total
07:00 AM	4	26	5	1	36	8	128	31	0	167	18	31	1	0	50	17	87	2	0	106	359
07:15 AM	9	32	2	2	45	9	118	32	1	160	9	25	4	0	38	15	81	8	0	104	347
07:30 AM	7	33	1	1	42	8	137	22	1	168	12	22	2	0	36	19	94	11	0	124	370
07:45 AM	3	38	9	3	53	8	108	25	0	141	6	35	6	0	47	26	103	7	0	136	377
Total	23	129	17	7	176	33	491	110	2	636	45	113	13	0	171	77	365	28	0	470	1453
08:00 AM	8	52	11	3	74	12	121	28	1	162	13	45	4	0	62	34	84	5	1	124	422
08:15 AM	11	64	19	0	94	11	115	16	4	146	12	54	3	0	69	45	99	13	0	157	466
08:30 AM	7	58	9	1	75	22	112	15	3	152	18	54	10	0	82	35	91	23	0	149	458
08:45 AM	9	57	7	0	73	40	95	13	1	149	11	53	2	0	66	12	88	16	0	116	404
Total	35	231	46	4	316	85	443	72	9	609	54	206	19	0	279	126	362	57	1	546	1750
*** BREAK ***																					
11:00 AM	5	32	7	0	44	8	31	7	0	46	12	50	10	0	72	9	55	12	0	76	238
11:15 AM	7	27	6	0	40	15	48	9	1	73	16	56	3	1	76	5	47	14	0	66	255
11:30 AM	4	35	12	0	51	13	51	5	0	69	15	71	9	0	95	1	50	12	0	63	278
11:45 AM	4	37	8	0	49	6	31	10	0	47	9	69	7	0	85	4	59	17	0	80	261
Total	20	131	33	0	184	42	161	31	1	235	52	246	29	1	328	19	211	55	0	285	1032
12:00 PM	6	40	6	0	52	4	25	10	1	40	9	72	7	0	88	3	49	12	0	64	244
12:15 PM	7	49	2	0	58	21	24	11	0	56	6	69	7	0	82	5	47	23	0	75	271
12:30 PM	4	20	8	0	32	18	40	14	0	72	3	58	30	0	91	10	49	16	0	75	270
12:45 PM	4	38	7	0	49	17	32	4	0	53	7	74	3	0	84	4	46	8	0	58	244
Total	21	147	23	0	191	60	121	39	1	221	25	273	47	0	345	22	191	59	0	272	1029
*** BREAK ***																					
04:00 PM	6	107	18	0	131	42	85	25	0	152	51	101	6	0	158	7	40	14	0	61	502
04:15 PM	7	106	12	0	125	17	49	5	0	71	75	105	7	0	187	13	47	23	0	83	466
04:30 PM	7	116	16	0	139	17	38	9	0	64	68	89	2	0	159	7	50	14	0	71	433
04:45 PM	4	107	16	0	127	11	59	6	0	76	72	100	5	0	177	4	44	7	0	55	435
Total	24	436	62	0	522	87	231	45	0	363	266	395	20	0	681	31	181	58	0	270	1836
05:00 PM	6	102	11	0	119	9	38	7	0	54	86	86	8	0	180	6	71	24	0	101	454
05:15 PM	8	139	18	0	165	15	45	8	0	68	75	116	4	0	195	10	55	8	0	73	501
05:30 PM	6	121	21	0	148	15	41	9	2	67	95	99	6	0	200	10	74	17	0	101	516
05:45 PM	12	131	19	0	162	16	50	5	0	71	76	129	3	0	208	6	80	14	1	101	542
Total	32	493	69	0	594	55	174	29	2	260	332	430	21	0	783	32	280	63	1	376	2013
Grand Total	155	1567	250	11	1983	362	1621	326	15	2324	774	1663	149	1	2587	307	1590	320	2	2219	9113
Apprch %	7.8	79	12.6	0.6		15.6	69.8	14	0.6		29.9	64.3	5.8	0		13.8	71.7	14.4	0.1		
Total %	1.7	17.2	2.7	0.1	21.8	4	17.8	3.6	0.2	25.5	8.5	18.2	1.6	0	28.4	3.4	17.4	3.5	0	24.3	
Veh	154	1551	248	9	1962	356	1613	320	8	2297	761	1614	145	1	2521	298	1520	308	1	2127	8907
% Veh	99.4	99	99.2	81.8	98.9	98.3	99.5	98.2	53.3	98.8	98.3	97.1	97.3	100	97.4	97.1	95.6	96.2	50	95.9	97.7
Trucks	1	16	2	2	21	6	8	6	7	27	13	49	4	0	66	9	70	12	1	92	206
% Trucks	0.6	1	0.8	18.2	1.1	1.7	0.5	1.8	46.7	1.2	1.7	2.9	2.7	0	2.6	2.9	4.4	3.8	50	4.1	2.3

SW 152nd Street & SW 82nd Avenue

File Name : SW 152nd St & SW 82nd Avenue
Site Code : 00000000
Start Date : 5/26/2016
Page No : 2

Groups Printed- Veh - Trucks - Turns

	SW 82nd Avenue Southbound					SW 82nd Avenue Northbound					SW 152nd Street Westbound					SW 152nd Street Eastbound					
	Left	Thru	RIght	Peds/Bike	App. Total	Left	Thru	RIght	Peds/Bike	App. Total	Left	Thru	RIght	Peds/Bike	App. Total	Left	Thru	RIght	Peds/Bike	App. Total	Int. Total
U-Turns	0	0	0	0	0	0	0	0	0	0	0	0	0	0	0	0	0	0	0	0	0
% U-Turns	0	0	0	0	0	0	0	0	0	0	0	0	0	0	0	0	0	0	0	0	0

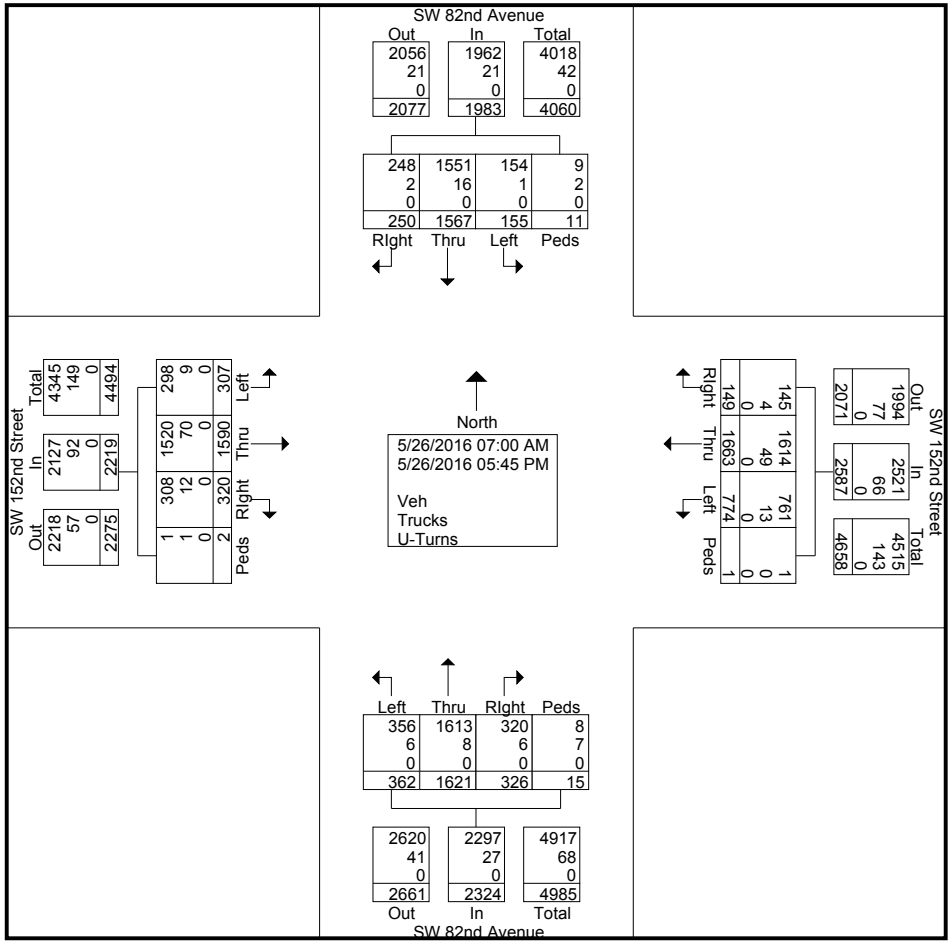

SW 152nd Street & SW 82nd Avenue

File Name : SW 152nd St & SW 82nd Avenue
Site Code : 00000000
Start Date : 5/26/2016
Page No : 3

	SW 82nd Avenue Southbound					SW 82nd Avenue Northbound					SW 152nd Street Westbound					SW 152nd Street Eastbound					
Start Time	Left	Thru	RIght	Peds/Bike	App. Total	Left	Thru	RIght	Peds/Bike	App. Total	Left	Thru	RIght	Peds/Bike	App. Total	Left	Thru	RIght	Peds/Bike	App. Total	Int. Total
Peak Hour Analysis From 07:00 AM to 08:45 AM - Peak 1 of 1																					
Peak Hour for Entire Intersection Begins at 08:00 AM																					
08:00 AM	8	52	11	**3**	74	12	**121**	**28**	1	**162**	13	45	4	0	62	34	84	5	**1**	124	422
08:15 AM	**11**	**64**	**19**	0	**94**	11	115	16	**4**	146	12	**54**	3	0	69	**45**	**99**	13	0	**157**	**466**
08:30 AM	7	58	9	1	75	22	112	15	3	152	**18**	54	**10**	0	**82**	35	91	**23**	0	149	458
08:45 AM	9	57	7	0	73	**40**	95	13	1	149	11	53	2	0	66	12	88	16	0	116	404
Total Volume	35	231	46	4	316	85	443	72	9	609	54	206	19	0	279	126	362	57	1	546	1750
% App. Total	11.1	73.1	14.6	1.3		14	72.7	11.8	1.5		19.4	73.8	6.8	0		23.1	66.3	10.4	0.2		
PHF	.795	.902	.605	.333	.840	.531	.915	.643	.563	.940	.750	.954	.475	.000	.851	.700	.914	.620	.250	.869	.939

SW 152nd Street & SW 82nd Avenue

File Name : SW 152nd St & SW 82nd Avenue
Site Code : 00000000
Start Date : 5/26/2016
Page No : 4

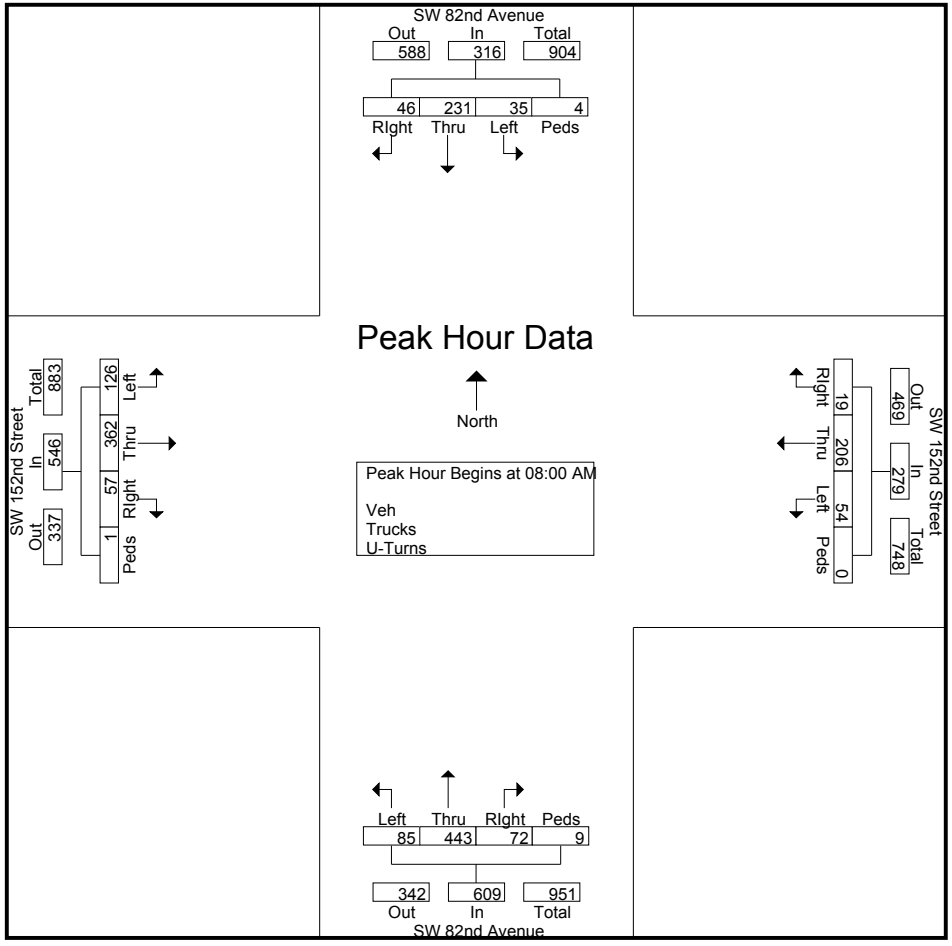

SW 152nd Street & SW 82nd Avenue

File Name : SW 152nd St & SW 82nd Avenue
Site Code : 00000000
Start Date : 5/26/2016
Page No : 5

	SW 82nd Avenue Southbound					SW 82nd Avenue Northbound					SW 152nd Street Westbound					SW 152nd Street Eastbound					
Start Time	Left	Thru	RIght	Peds/Bike	App. Total	Left	Thru	RIght	Peds/Bike	App. Total	Left	Thru	RIght	Peds/Bike	App. Total	Left	Thru	RIght	Peds/Bike	App. Total	Int. Total
Peak Hour Analysis From 11:00 AM to 12:45 PM - Peak 1 of 1																					
Peak Hour for Entire Intersection Begins at 11:30 AM																					
11:30 AM	4	35	**12**	0	51	13	**51**	5	0	**69**	**15**	71	**9**	0	**95**	1	50	12	0	63	**278**
11:45 AM	4	37	8	0	49	6	31	10	0	47	9	69	7	0	85	4	**59**	17	0	**80**	261
12:00 PM	6	40	6	0	52	4	25	10	**1**	40	9	**72**	7	0	88	3	49	12	0	64	244
12:15 PM	**7**	**49**	2	0	**58**	**21**	24	**11**	0	56	6	69	7	0	82	**5**	47	**23**	0	75	271
Total Volume	21	161	28	0	210	44	131	36	1	212	39	281	30	0	350	13	205	64	0	282	1054
% App. Total	10	76.7	13.3	0		20.8	61.8	17	0.5		11.1	80.3	8.6	0		4.6	72.7	22.7	0		
PHF	.750	.821	.583	.000	.905	.524	.642	.818	.250	.768	.650	.976	.833	.000	.921	.650	.869	.696	.000	.881	.948

SW 152nd Street & SW 82nd Avenue

File Name : SW 152nd St & SW 82nd Avenue
Site Code : 00000000
Start Date : 5/26/2016
Page No : 6

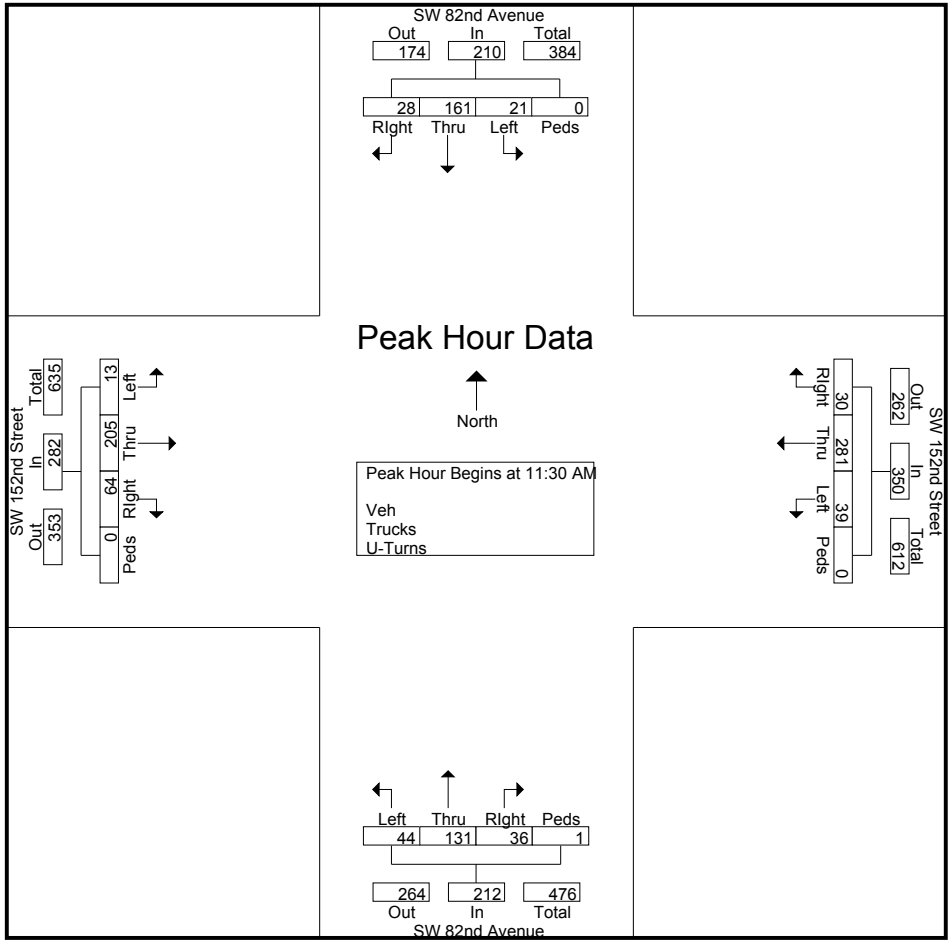

SW 152nd Street & SW 82nd Avenue

File Name : SW 152nd St & SW 82nd Avenue
Site Code : 00000000
Start Date : 5/26/2016
Page No : 7

	SW 82nd Avenue Southbound					SW 82nd Avenue Northbound					SW 152nd Street Westbound					SW 152nd Street Eastbound					
Start Time	Left	Thru	RIght	Peds/Bike	App. Total	Left	Thru	RIght	Peds/Bike	App. Total	Left	Thru	RIght	Peds/Bike	App. Total	Left	Thru	RIght	Peds/Bike	App. Total	Int. Total
Peak Hour Analysis From 04:00 PM to 05:45 PM - Peak 1 of 1																					
Peak Hour for Entire Intersection Begins at 05:00 PM																					
05:00 PM	6	102	11	0	119	9	38	7	0	54	86	86	**8**	0	180	6	71	**24**	0	**101**	454
05:15 PM	8	**139**	18	0	**165**	15	45	8	0	68	75	116	4	0	195	**10**	55	8	0	73	501
05:30 PM	6	121	**21**	0	148	15	41	**9**	**2**	67	**95**	99	6	0	200	10	74	17	0	101	516
05:45 PM	**12**	131	19	0	162	**16**	**50**	5	0	**71**	76	**129**	3	0	**208**	6	**80**	14	**1**	101	**542**
Total Volume	32	493	69	0	594	55	174	29	2	260	332	430	21	0	783	32	280	63	1	376	2013
% App. Total	5.4	83	11.6	0		21.2	66.9	11.2	0.8		42.4	54.9	2.7	0		8.5	74.5	16.8	0.3		
PHF	.667	.887	.821	.000	.900	.859	.870	.806	.250	.915	.874	.833	.656	.000	.941	.800	.875	.656	.250	.931	.929

SW 152nd Street & SW 82nd Avenue

File Name : SW 152nd St & SW 82nd Avenue
Site Code : 00000000
Start Date : 5/26/2016
Page No : 8

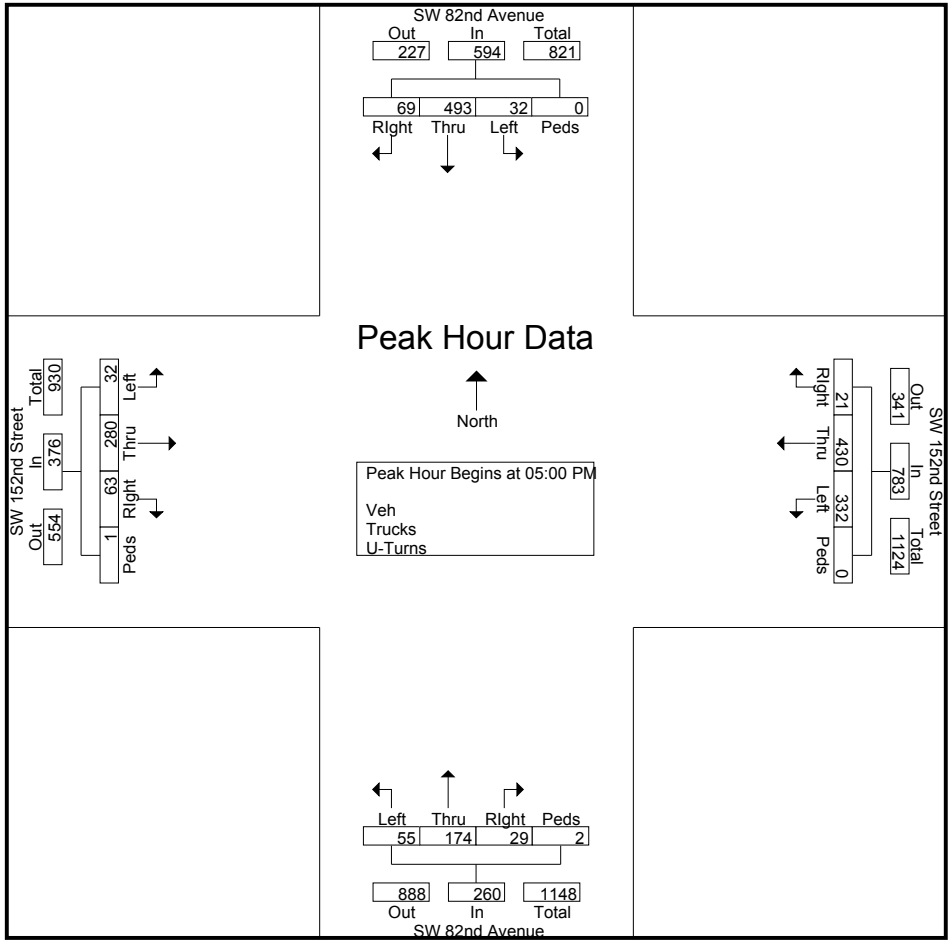

SW 152nd Street & SW 87th Avenue

File Name : SW 152nd Street & SW 87th Avenue
Site Code : 00000000
Start Date : 5/26/2016
Page No : 1

Groups Printed- Trucks

	SW 87th Avenue Southbound					SW 87th Avenue Northbound					SW 152nd Street Westbound					SW 152nd Street Eastbound					
Start Time	Left	Thru	RIght	Bikes	App. Total	Left	Thru	RIght	Bikes	App. Total	Left	Thru	RIght	Bikes	App. Total	Left	Thru	RIght	Bikes	App. Total	Int. Total
07:00 AM	0	0	0	0	0	0	0	0	0	0	0	3	0	0	3	0	3	0	0	3	6
07:15 AM	0	1	0	0	1	0	0	0	0	0	0	4	0	0	4	0	4	0	0	4	9
07:30 AM	0	0	0	0	0	0	0	0	0	0	0	1	0	0	1	0	7	2	0	9	10
07:45 AM	0	0	1	0	1	0	0	0	0	0	0	2	0	0	2	0	3	0	0	3	6
Total	0	1	1	0	2	0	0	0	0	0	0	10	0	0	10	0	17	2	0	19	31
08:00 AM	0	0	0	0	0	0	0	0	0	0	0	4	0	0	4	0	1	0	0	1	5
08:15 AM	0	0	0	0	0	0	0	0	0	0	0	4	0	0	4	0	4	0	0	4	8
08:30 AM	0	0	0	0	0	0	0	0	0	0	0	3	0	0	3	0	8	0	0	8	11
08:45 AM	0	0	0	0	0	0	0	0	0	0	0	2	0	1	3	2	3	1	0	6	9
Total	0	0	0	0	0	0	0	0	0	0	0	13	0	1	14	2	16	1	0	19	33
*** BREAK ***																					
11:00 AM	0	0	0	0	0	0	0	0	0	0	0	2	0	0	2	0	4	0	0	4	6
11:15 AM	0	0	0	0	0	0	0	0	0	0	0	2	0	0	2	1	4	0	0	5	7
11:30 AM	1	0	0	0	1	0	0	0	0	0	0	1	0	0	1	0	1	0	0	1	3
11:45 AM	1	1	0	0	2	1	0	0	0	1	0	2	0	0	2	0	4	0	0	4	9
Total	2	1	0	0	3	1	0	0	0	1	0	7	0	0	7	1	13	0	0	14	25
12:00 PM	0	0	0	0	0	0	0	0	0	0	1	4	0	0	5	0	2	1	0	3	8
12:15 PM	0	0	0	0	0	0	0	0	0	0	0	1	0	0	1	1	3	1	0	5	6
12:30 PM	0	0	0	0	0	1	1	0	0	2	0	3	0	0	3	0	3	0	0	3	8
12:45 PM	0	0	0	0	0	0	0	0	0	0	0	4	0	0	4	0	4	0	0	4	8
Total	0	0	0	0	0	1	1	0	0	2	1	12	0	0	13	1	12	2	0	15	30
*** BREAK ***																					
04:00 PM	0	0	0	0	0	0	0	0	0	0	0	5	0	0	5	0	5	1	0	6	11
04:15 PM	0	0	0	0	0	1	1	0	0	2	0	4	0	0	4	0	3	0	0	3	9
04:30 PM	0	0	0	0	0	0	0	0	0	0	0	3	0	0	3	0	2	0	0	2	5
04:45 PM	0	0	0	0	0	1	0	0	0	1	0	2	0	0	2	0	2	0	0	2	5
Total	0	0	0	0	0	2	1	0	0	3	0	14	0	0	14	0	12	1	0	13	30
05:00 PM	0	0	0	0	0	0	0	0	1	1	0	4	0	0	4	0	5	0	0	5	10
05:15 PM	0	0	0	0	0	0	0	0	0	0	0	2	0	0	2	0	0	0	0	0	2
05:30 PM	0	0	1	0	1	1	0	0	0	1	0	1	0	0	1	0	0	0	0	0	3
05:45 PM	0	0	0	1	1	0	0	0	0	0	0	0	0	0	0	0	1	0	0	1	2
Total	0	0	1	1	2	1	0	0	1	2	0	7	0	0	7	0	6	0	0	6	17
Grand Total	2	2	2	1	7	5	2	0	1	8	1	63	0	1	65	4	76	6	0	86	166
Apprch %	28.6	28.6	28.6	14.3		62.5	25	0	12.5		1.5	96.9	0	1.5		4.7	88.4	7	0		
Total %	1.2	1.2	1.2	0.6	4.2	3	1.2	0	0.6	4.8	0.6	38	0	0.6	39.2	2.4	45.8	3.6	0	51.8	

SW 152nd Street & SW 87th Avenue

File Name : SW 152nd Street & SW 87th Avenue
Site Code : 00000000
Start Date : 5/26/2016
Page No : 2

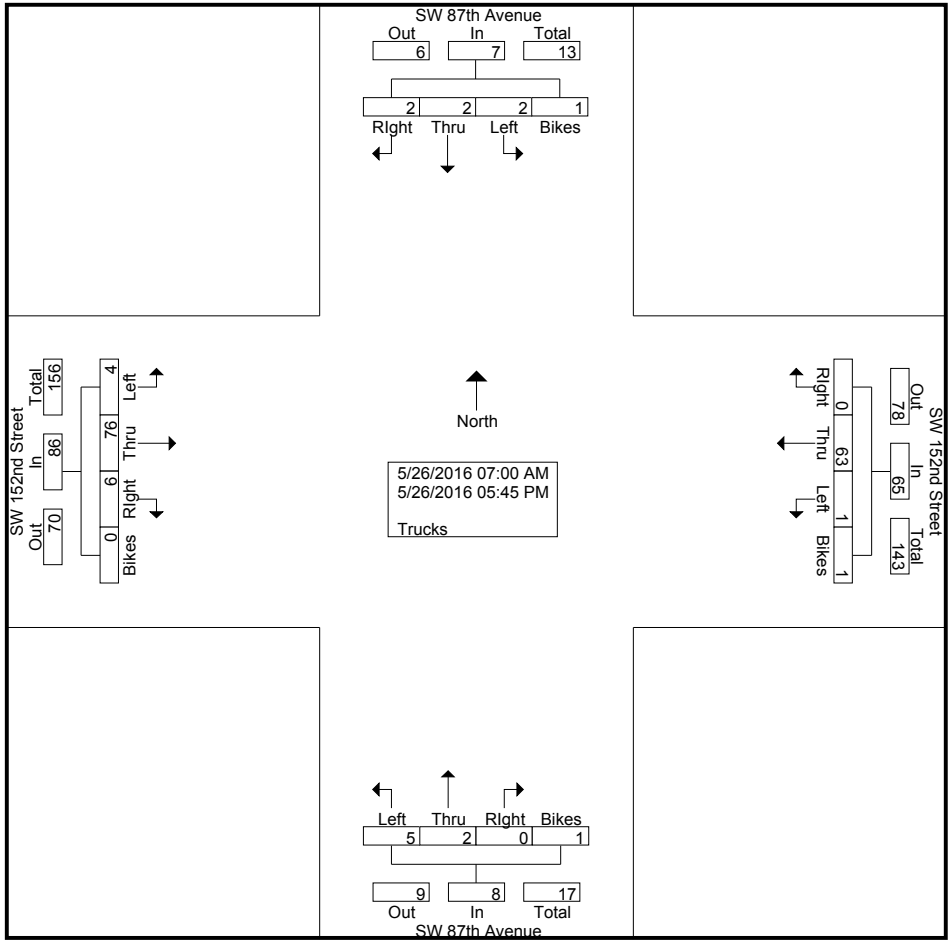

SW 152nd Street & SW 87th Avenue

File Name : SW 152nd Street & SW 87th Avenue
Site Code : 00000000
Start Date : 5/26/2016
Page No : 3

	SW 87th Avenue Southbound					SW 87th Avenue Northbound					SW 152nd Street Westbound					SW 152nd Street Eastbound					
Start Time	Left	Thru	Right	Bikes	App. Total	Left	Thru	Right	Bikes	App. Total	Left	Thru	Right	Bikes	App. Total	Left	Thru	Right	Bikes	App. Total	Int. Total
Peak Hour Analysis From 07:00 AM to 08:45 AM - Peak 1 of 1																					
Peak Hour for Entire Intersection Begins at 08:00 AM																					
08:00 AM	0	0	0	0	0	0	0	0	0	0	0	**4**	0	0	**4**	0	1	0	0	1	5
08:15 AM	0	0	0	0	0	0	0	0	0	0	0	4	0	0	4	0	4	0	0	4	8
08:30 AM	0	0	0	0	0	0	0	0	0	0	0	3	0	0	3	0	**8**	0	0	**8**	**11**
08:45 AM	0	0	0	0	0	0	0	0	0	0	0	2	0	**1**	3	**2**	3	**1**	0	6	9
Total Volume	0	0	0	0	0	0	0	0	0	0	0	13	0	1	14	2	16	1	0	19	33
% App. Total	0	0	0	0		0	0	0	0		0	92.9	0	7.1		10.5	84.2	5.3	0		
PHF	.000	.000	.000	.000	.000	.000	.000	.000	.000	.000	.000	.813	.000	.250	.875	.250	.500	.250	.000	.594	.750

SW 152nd Street & SW 87th Avenue

File Name : SW 152nd Street & SW 87th Avenue
Site Code : 00000000
Start Date : 5/26/2016
Page No : 4

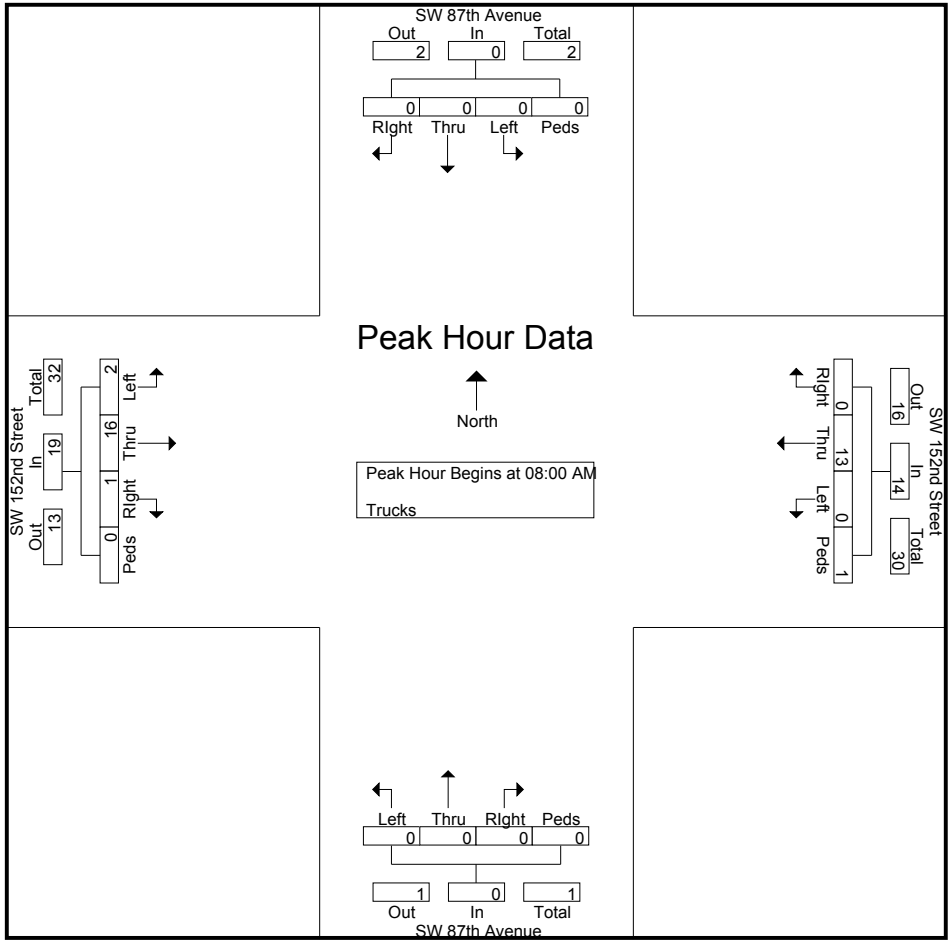

SW 152nd Street & SW 87th Avenue

File Name : SW 152nd Street & SW 87th Avenue
Site Code : 00000000
Start Date : 5/26/2016
Page No : 5

	SW 87th Avenue Southbound					SW 87th Avenue Northbound					SW 152nd Street Westbound					SW 152nd Street Eastbound					
Start Time	Left	Thru	RIght	Bikes	App. Total	Left	Thru	RIght	Bikes	App. Total	Left	Thru	RIght	Bikes	App. Total	Left	Thru	RIght	Bikes	App. Total	Int. Total
Peak Hour Analysis From 11:00 AM to 12:45 PM - Peak 1 of 1																					
Peak Hour for Entire Intersection Begins at 11:45 AM																					
11:45 AM	**1**	**1**	0	0	**2**	**1**	0	0	0	1	0	2	0	0	2	0	**4**	0	0	4	**9**
12:00 PM	0	0	0	0	0	0	0	0	0	0	**1**	**4**	0	0	**5**	0	2	**1**	0	3	8
12:15 PM	0	0	0	0	0	0	0	0	0	0	0	1	0	0	1	**1**	3	1	0	**5**	6
12:30 PM	0	0	0	0	0	1	**1**	0	0	**2**	0	3	0	0	3	0	3	0	0	3	8
Total Volume	1	1	0	0	2	2	1	0	0	3	1	10	0	0	11	1	12	2	0	15	31
% App. Total	50	50	0	0		66.7	33.3	0	0		9.1	90.9	0	0		6.7	80	13.3	0		
PHF	.250	.250	.000	.000	.250	.500	.250	.000	.000	.375	.250	.625	.000	.000	.550	.250	.750	.500	.000	.750	.861

SW 152nd Street & SW 87th Avenue

File Name : SW 152nd Street & SW 87th Avenue
Site Code : 00000000
Start Date : 5/26/2016
Page No : 6

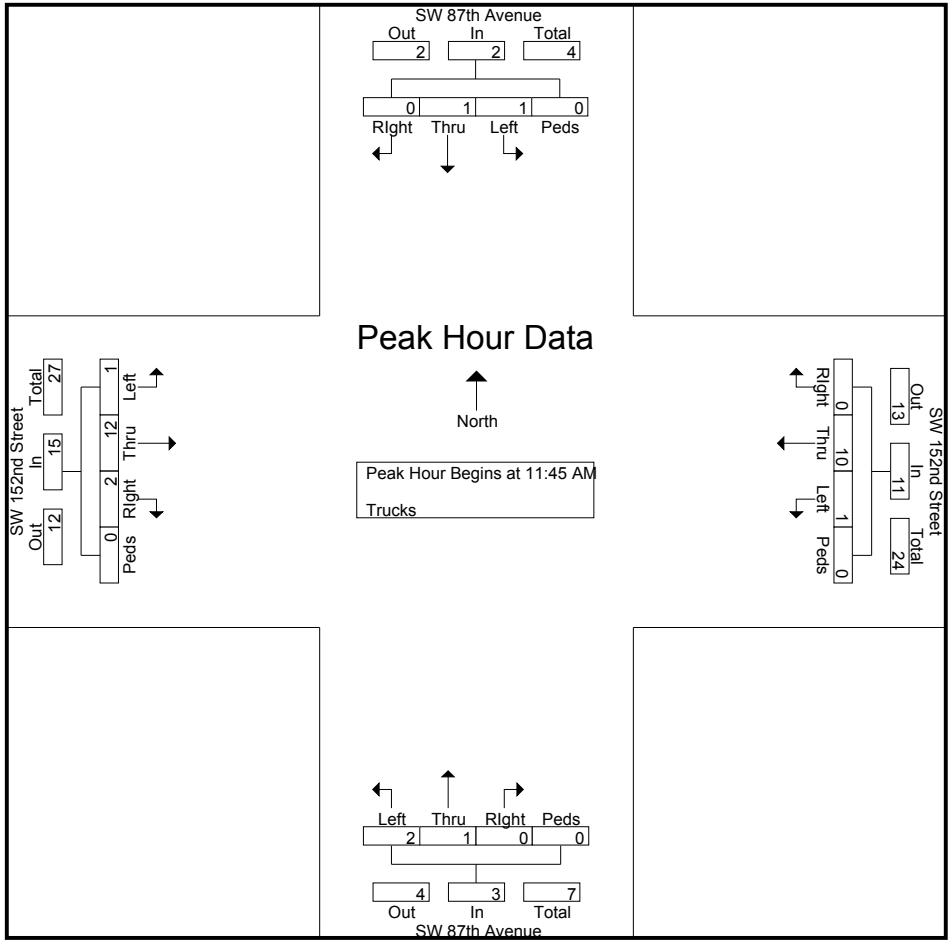

SW 152nd Street & SW 87th Avenue

File Name : SW 152nd Street & SW 87th Avenue
Site Code : 00000000
Start Date : 5/26/2016
Page No : 7

	SW 87th Avenue Southbound					SW 87th Avenue Northbound					SW 152nd Street Westbound					SW 152nd Street Eastbound					
Start Time	Left	Thru	RIght	Bikes	App. Total	Left	Thru	RIght	Bikes	App. Total	Left	Thru	RIght	Bikes	App. Total	Left	Thru	RIght	Bikes	App. Total	Int. Total
Peak Hour Analysis From 04:00 PM to 05:45 PM - Peak 1 of 1																					
Peak Hour for Entire Intersection Begins at 04:00 PM																					
04:00 PM	0	0	0	0	0	0	0	0	0	0	0	**5**	0	0	**5**	0	**5**	**1**	0	**6**	**11**
04:15 PM	0	0	0	0	0	**1**	**1**	0	0	**2**	0	4	0	0	4	0	3	0	0	3	9
04:30 PM	0	0	0	0	0	0	0	0	0	0	0	3	0	0	3	0	2	0	0	2	5
04:45 PM	0	0	0	0	0	1	0	0	0	1	0	2	0	0	2	0	2	0	0	2	5
Total Volume	0	0	0	0	0	2	1	0	0	3	0	14	0	0	14	0	12	1	0	13	30
% App. Total	0	0	0	0		66.7	33.3	0	0		0	100	0	0		0	92.3	7.7	0		
PHF	.000	.000	.000	.000	.000	.500	.250	.000	.000	.375	.000	.700	.000	.000	.700	.000	.600	.250	.000	.542	.682

SW 152nd Street & SW 87th Avenue

File Name : SW 152nd Street & SW 87th Avenue
Site Code : 00000000
Start Date : 5/26/2016
Page No : 8

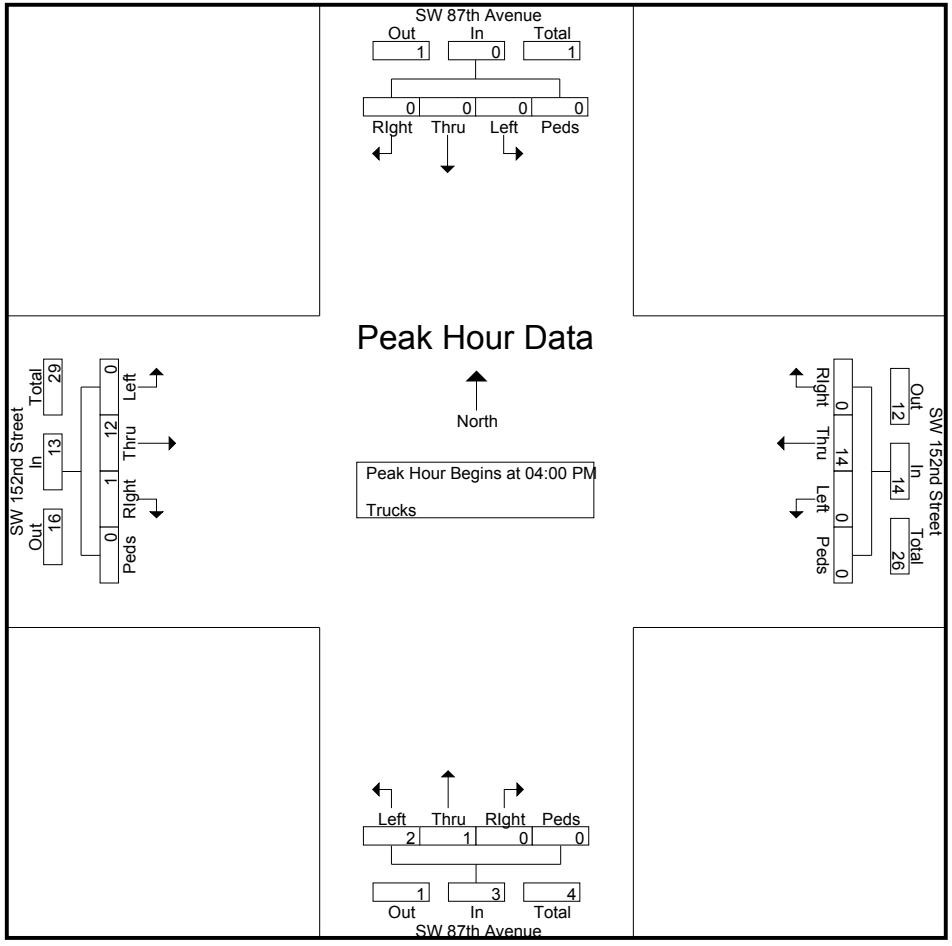

SW 152nd Street & SW 87th Avenue

File Name : SW 152nd Street & SW 87th Avenue
Site Code : 00000000
Start Date : 5/26/2016
Page No : 1

Groups Printed- Turns

	SW 87th Avenue Southbound					SW 87th Avenue Northbound					SW 152nd Street Westbound					SW 152nd Street Eastbound					
Start Time	Left	Thru	RIght	Peds/Bike	App. Total	Left	Thru	RIght	Peds/Bike	App. Total	Left	Thru	RIght	Peds/Bike	App. Total	Left	Thru	RIght	Peds/Bike	App. Total	Int. Total
*** BREAK ***																					
12:00 PM	0	0	0	0	0	1	0	0	0	1	0	0	0	0	0	0	0	0	0	0	1
*** BREAK ***																					
Total	0	0	0	0	0	1	0	0	0	1	0	0	0	0	0	0	0	0	0	0	1
*** BREAK ***																					
Grand Total	0	0	0	0	0	1	0	0	0	1	0	0	0	0	0	0	0	0	0	0	1
Apprch %	0	0	0	0		100	0	0	0		0	0	0	0		0	0	0	0		
Total %	0	0	0	0	0	100	0	0	0	100	0	0	0	0	0	0	0	0	0	0	

SW 152nd Street & SW 87th Avenue

File Name : SW 152nd Street & SW 87th Avenue
Site Code : 00000000
Start Date : 5/26/2016
Page No : 2

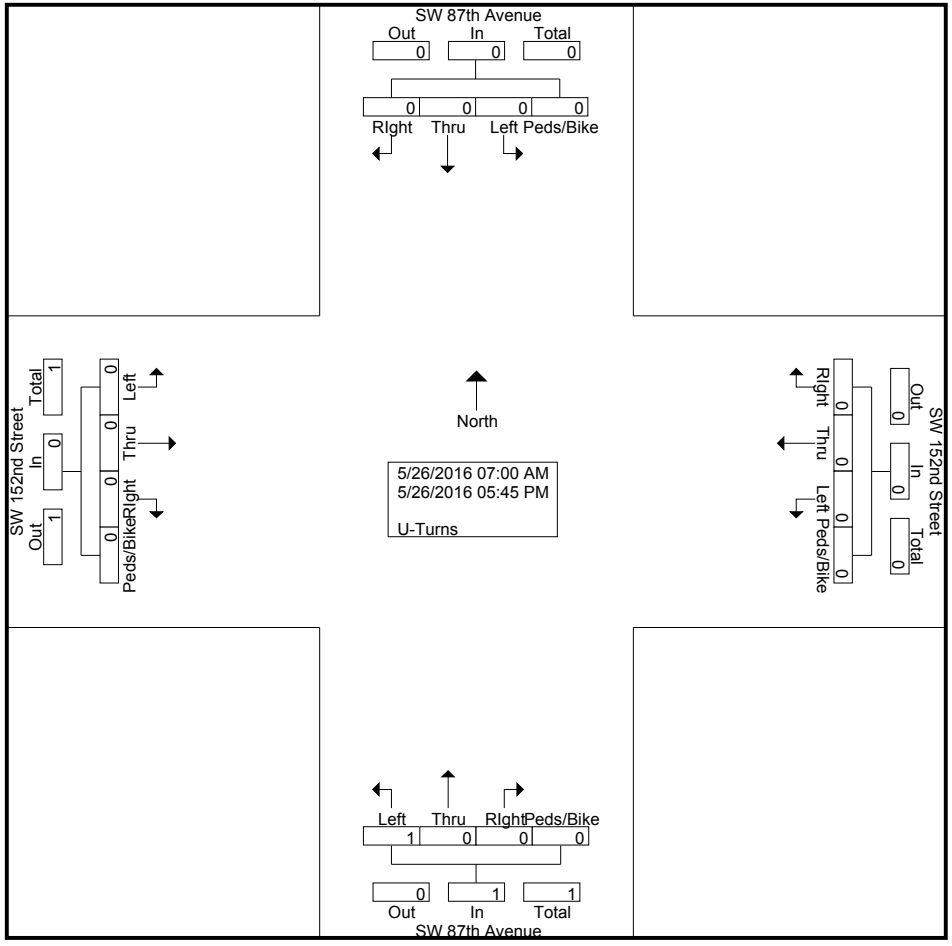

SW 152nd Street & SW 87th Avenue

File Name : SW 152nd Street & SW 87th Avenue
Site Code : 00000000
Start Date : 5/26/2016
Page No : 3

	SW 87th Avenue Southbound					SW 87th Avenue Northbound					SW 152nd Street Westbound					SW 152nd Street Eastbound					
Start Time	Left	Thru	RIght	Peds/Bike	App. Total	Left	Thru	RIght	Peds/Bike	App. Total	Left	Thru	RIght	Peds/Bike	App. Total	Left	Thru	RIght	Peds/Bike	App. Total	Int. Total
Peak Hour Analysis From 07:00 AM to 08:45 AM - Peak 1 of 1																					
Peak Hour for Entire Intersection Begins at 07:00 AM																					
07:00 AM	0	0	0	0	0	0	0	0	0	0	0	0	0	0	0	0	0	0	0	0	0
07:15 AM	0	0	0	0	0	0	0	0	0	0	0	0	0	0	0	0	0	0	0	0	0
07:30 AM	0	0	0	0	0	0	0	0	0	0	0	0	0	0	0	0	0	0	0	0	0
07:45 AM	0	0	0	0	0	0	0	0	0	0	0	0	0	0	0	0	0	0	0	0	0
Total Volume	0	0	0	0	0	0	0	0	0	0	0	0	0	0	0	0	0	0	0	0	0
% App. Total	0	0	0	0		0	0	0	0		0	0	0	0		0	0	0	0		
PHF	.000	.000	.000	.000	.000	.000	.000	.000	.000	.000	.000	.000	.000	.000	.000	.000	.000	.000	.000	.000	.000

SW 152nd Street & SW 87th Avenue

File Name : SW 152nd Street & SW 87th Avenue
Site Code : 00000000
Start Date : 5/26/2016
Page No : 4

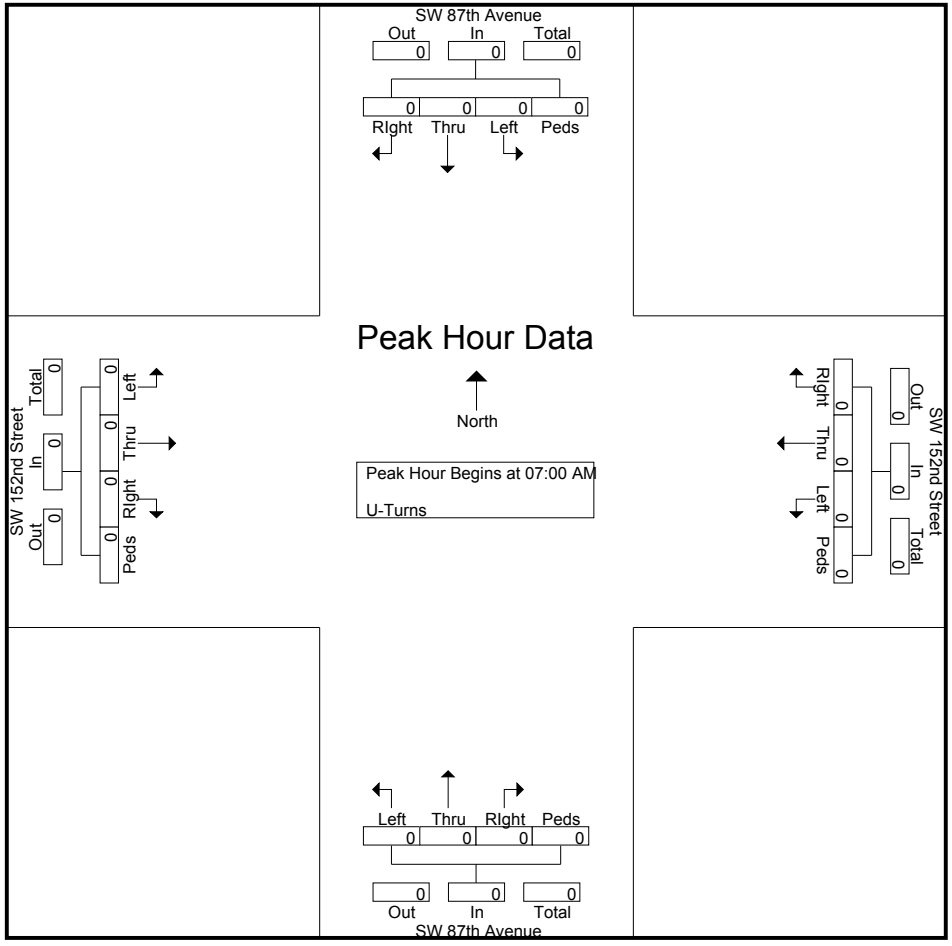

SW 152nd Street & SW 87th Avenue

File Name : SW 152nd Street & SW 87th Avenue
Site Code : 00000000
Start Date : 5/26/2016
Page No : 5

	SW 87th Avenue Southbound					SW 87th Avenue Northbound					SW 152nd Street Westbound					SW 152nd Street Eastbound					
Start Time	Left	Thru	RIght	Peds/Bike	App. Total	Left	Thru	RIght	Peds/Bike	App. Total	Left	Thru	RIght	Peds/Bike	App. Total	Left	Thru	RIght	Peds/Bike	App. Total	Int. Total
Peak Hour Analysis From 11:00 AM to 12:45 PM - Peak 1 of 1																					
Peak Hour for Entire Intersection Begins at 11:15 AM																					
11:15 AM	0	0	0	0	0	0	0	0	0	0	0	0	0	0	0	0	0	0	0	0	0
11:30 AM	0	0	0	0	0	0	0	0	0	0	0	0	0	0	0	0	0	0	0	0	0
11:45 AM	0	0	0	0	0	0	0	0	0	0	0	0	0	0	0	0	0	0	0	0	0
12:00 PM	0	0	0	0	0	**1**	0	0	0	**1**	0	0	0	0	0	0	0	0	0	0	**1**
Total Volume	0	0	0	0	0	1	0	0	0	1	0	0	0	0	0	0	0	0	0	0	1
% App. Total	0	0	0	0		100	0	0	0		0	0	0	0		0	0	0	0		
PHF	.000	.000	.000	.000	.000	.250	.000	.000	.000	.250	.000	.000	.000	.000	.000	.000	.000	.000	.000	.000	.250

SW 152nd Street & SW 87th Avenue

File Name : SW 152nd Street & SW 87th Avenue
Site Code : 00000000
Start Date : 5/26/2016
Page No : 6

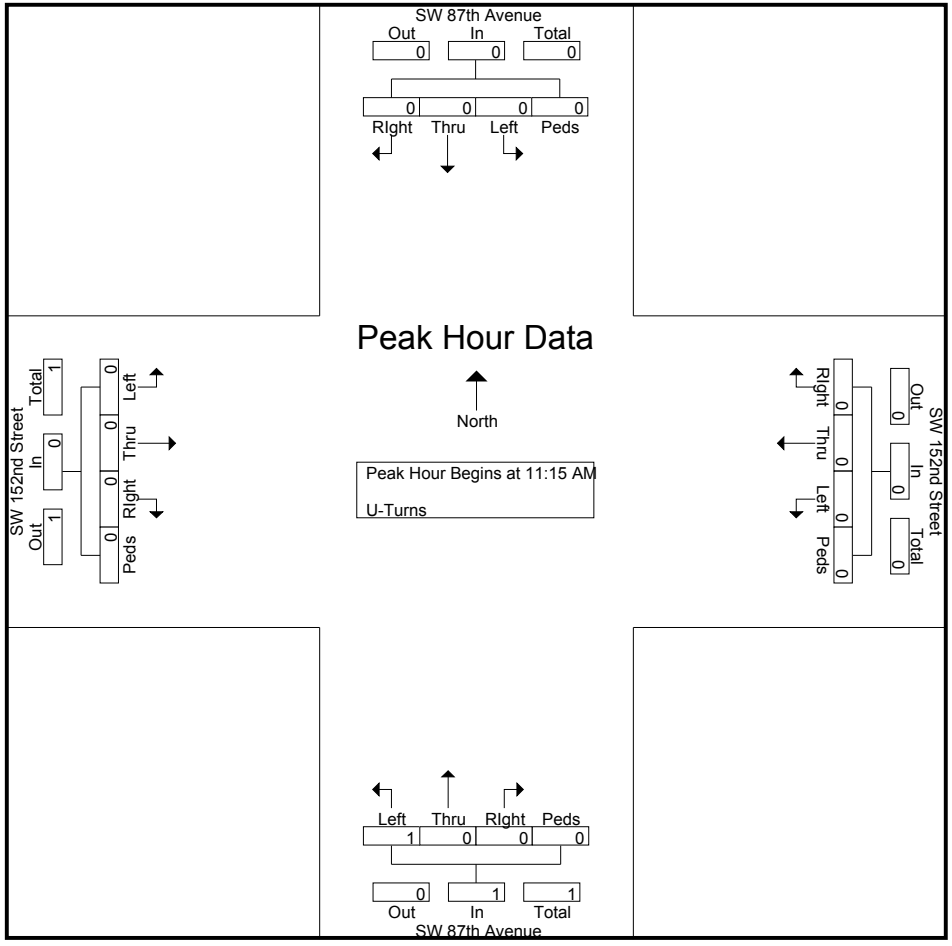

SW 152nd Street & SW 87th Avenue

File Name : SW 152nd Street & SW 87th Avenue
Site Code : 00000000
Start Date : 5/26/2016
Page No : 7

	SW 87th Avenue Southbound					SW 87th Avenue Northbound					SW 152nd Street Westbound					SW 152nd Street Eastbound					
Start Time	Left	Thru	RIght	Peds/Bike	App. Total	Left	Thru	RIght	Peds/Bike	App. Total	Left	Thru	RIght	Peds/Bike	App. Total	Left	Thru	RIght	Peds/Bike	App. Total	Int. Total
Peak Hour Analysis From 04:00 PM to 05:45 PM - Peak 1 of 1																					
Peak Hour for Entire Intersection Begins at 04:00 PM																					
04:00 PM	0	0	0	0	0	0	0	0	0	0	0	0	0	0	0	0	0	0	0	0	0
04:15 PM	0	0	0	0	0	0	0	0	0	0	0	0	0	0	0	0	0	0	0	0	0
04:30 PM	0	0	0	0	0	0	0	0	0	0	0	0	0	0	0	0	0	0	0	0	0
04:45 PM	0	0	0	0	0	0	0	0	0	0	0	0	0	0	0	0	0	0	0	0	0
Total Volume	0	0	0	0	0	0	0	0	0	0	0	0	0	0	0	0	0	0	0	0	0
% App. Total	0	0	0	0		0	0	0	0		0	0	0	0		0	0	0	0		
PHF	.000	.000	.000	.000	.000	.000	.000	.000	.000	.000	.000	.000	.000	.000	.000	.000	.000	.000	.000	.000	.000

SW 152nd Street & SW 87th Avenue

File Name : SW 152nd Street & SW 87th Avenue
Site Code : 00000000
Start Date : 5/26/2016
Page No : 8

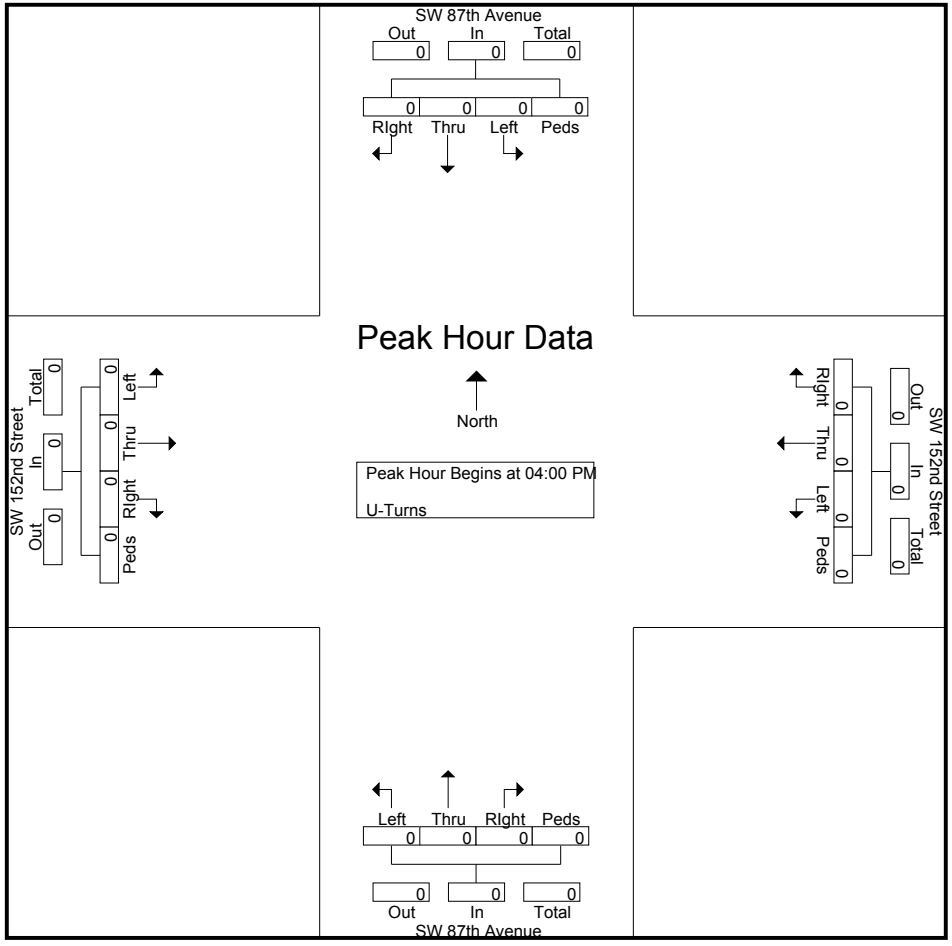

SW 152nd Street & SW 87th Avenue

File Name : SW 152nd Street & SW 87th Avenue
Site Code : 00000000
Start Date : 5/26/2016
Page No : 1

Groups Printed- Veh - Trucks - Turns

	SW 87th Avenue Southbound					SW 87th Avenue Northbound					SW 152nd Street Westbound					SW 152nd Street Eastbound					
Start Time	Left	Thru	RIght	Peds/Bike	App. Total	Left	Thru	RIght	Peds/Bike	App. Total	Left	Thru	RIght	Peds/Bike	App. Total	Left	Thru	RIght	Peds/Bike	App. Total	Int. Total
07:00 AM	1	2	4	0	7	13	19	1	0	33	0	54	6	0	60	36	92	2	0	130	230
07:15 AM	3	8	7	0	18	10	29	3	0	42	1	42	9	0	52	23	85	4	0	112	224
07:30 AM	8	10	8	0	26	10	24	0	1	35	0	47	7	0	54	34	120	3	0	157	272
07:45 AM	6	8	12	0	26	11	27	1	0	39	0	67	9	0	76	45	113	2	0	160	301
Total	18	28	31	0	77	44	99	5	1	149	1	210	31	0	242	138	410	11	0	559	1027
08:00 AM	11	7	8	0	26	7	34	5	4	50	2	72	11	0	85	42	112	4	0	158	319
08:15 AM	10	9	3	0	22	7	26	3	1	37	2	97	14	0	113	41	145	7	0	193	365
08:30 AM	7	13	9	0	29	10	17	1	0	28	3	103	14	0	120	25	114	8	0	147	324
08:45 AM	10	15	12	0	37	14	27	2	1	44	3	91	20	1	115	24	97	9	0	130	326
Total	38	44	32	0	114	38	104	11	6	159	10	363	59	1	433	132	468	28	0	628	1334
*** BREAK ***																					
11:00 AM	10	8	8	0	26	6	8	1	0	15	0	76	11	0	87	5	69	6	0	80	208
11:15 AM	13	5	8	0	26	6	8	2	1	17	3	78	6	0	87	9	54	4	0	67	197
11:30 AM	8	12	28	1	49	10	8	1	0	19	3	79	20	0	102	8	64	9	0	81	251
11:45 AM	9	6	11	0	26	8	7	1	0	16	2	98	5	0	105	3	68	8	0	79	226
Total	40	31	55	1	127	30	31	5	1	67	8	331	42	0	381	25	255	27	0	307	882
12:00 PM	12	11	13	0	36	6	5	2	0	13	6	84	11	0	101	8	54	8	0	70	220
12:15 PM	14	12	13	0	39	4	3	1	0	8	1	86	13	0	100	7	68	8	0	83	230
12:30 PM	11	9	15	0	35	5	4	3	0	12	2	72	10	0	84	9	73	13	0	95	226
12:45 PM	8	9	14	0	31	11	8	2	1	22	2	75	11	0	88	3	56	9	0	68	209
Total	45	41	55	0	141	26	20	8	1	55	11	317	45	0	373	27	251	38	0	316	885
*** BREAK ***																					
04:00 PM	12	34	18	2	66	12	18	1	1	32	5	147	19	0	171	6	73	14	0	93	362
04:15 PM	12	18	29	0	59	7	16	1	0	24	5	131	10	0	146	7	60	8	0	75	304
04:30 PM	17	28	21	0	66	1	9	1	0	11	8	118	8	0	134	10	61	9	0	80	291
04:45 PM	14	32	18	2	66	8	8	3	0	19	5	96	11	2	114	6	68	12	0	86	285
Total	55	112	86	4	257	28	51	6	1	86	23	492	48	2	565	29	262	43	0	334	1242
05:00 PM	17	33	18	0	68	10	13	3	1	27	1	107	8	0	116	8	67	9	0	84	295
05:15 PM	12	33	23	1	69	7	5	3	0	15	5	121	11	0	137	7	58	13	0	78	299
05:30 PM	12	34	43	0	89	5	8	1	0	14	7	115	12	0	134	5	70	10	0	85	322
05:45 PM	21	29	32	1	83	7	7	2	1	17	6	138	14	0	158	3	77	5	0	85	343
Total	62	129	116	2	309	29	33	9	2	73	19	481	45	0	545	23	272	37	0	332	1259
Grand Total	258	385	375	7	1025	195	338	44	12	589	72	2194	270	3	2539	374	1918	184	0	2476	6629
Apprch %	25.2	37.6	36.6	0.7		33.1	57.4	7.5	2		2.8	86.4	10.6	0.1		15.1	77.5	7.4	0		
Total %	3.9	5.8	5.7	0.1	15.5	2.9	5.1	0.7	0.2	8.9	1.1	33.1	4.1	0	38.3	5.6	28.9	2.8	0	37.4	
Veh	256	383	373	6	1018	189	336	44	11	580	71	2131	270	2	2474	370	1842	178	0	2390	6462
% Veh	99.2	99.5	99.5	85.7	99.3	96.9	99.4	100	91.7	98.5	98.6	97.1	100	66.7	97.4	98.9	96	96.7	0	96.5	97.5
Trucks	2	2	2	1	7	5	2	0	1	8	1	63	0	1	65	4	76	6	0	86	166
% Trucks	0.8	0.5	0.5	14.3	0.7	2.6	0.6	0	8.3	1.4	1.4	2.9	0	33.3	2.6	1.1	4	3.3	0	3.5	2.5

SW 152nd Street & SW 87th Avenue

File Name : SW 152nd Street & SW 87th Avenue
Site Code : 00000000
Start Date : 5/26/2016
Page No : 2

Groups Printed- Veh - Trucks - Turns

	SW 87th Avenue Southbound					SW 87th Avenue Northbound					SW 152nd Street Westbound					SW 152nd Street Eastbound					
	Left	Thru	RIght	Peds/Bike	App. Total	Left	Thru	RIght	Peds/Bike	App. Total	Left	Thru	RIght	Peds/Bike	App. Total	Left	Thru	RIght	Peds/Bike	App. Total	Int. Total
U-Turns	0	0	0	0	0	1	0	0	0	1	0	0	0	0	0	0	0	0	0	0	1
% U-Turns	0	0	0	0	0	0.5	0	0	0	0.2	0	0	0	0	0	0	0	0	0	0	0

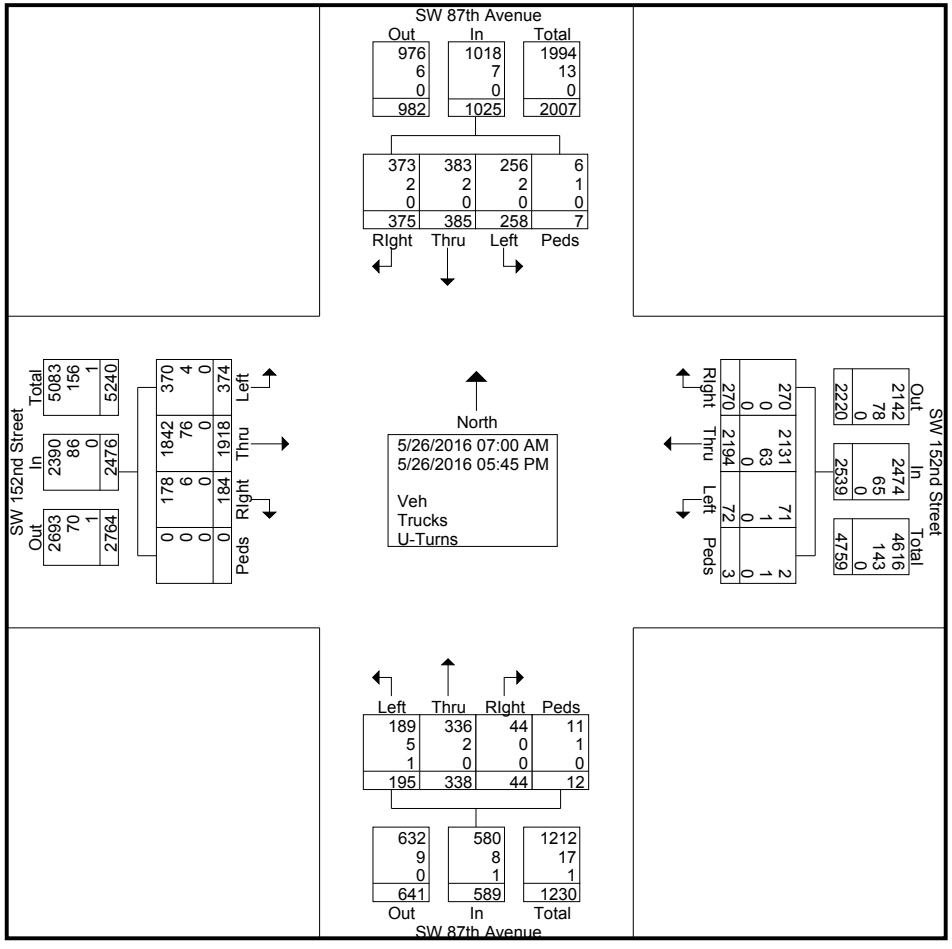

SW 152nd Street & SW 87th Avenue

File Name : SW 152nd Street & SW 87th Avenue
Site Code : 00000000
Start Date : 5/26/2016
Page No : 3

	SW 87th Avenue Southbound					SW 87th Avenue Northbound					SW 152nd Street Westbound					SW 152nd Street Eastbound					
Start Time	Left	Thru	RIght	Peds/Bike	App. Total	Left	Thru	RIght	Peds/Bike	App. Total	Left	Thru	RIght	Peds/Bike	App. Total	Left	Thru	RIght	Peds/Bike	App. Total	Int. Total
Peak Hour Analysis From 07:00 AM to 08:45 AM - Peak 1 of 1																					
Peak Hour for Entire Intersection Begins at 08:00 AM																					
08:00 AM	**11**	7	8	0	26	7	**34**	**5**	**4**	**50**	2	72	11	0	85	**42**	112	4	0	158	319
08:15 AM	10	9	3	0	22	7	26	3	1	37	2	97	14	0	113	41	**145**	7	0	**193**	**365**
08:30 AM	7	13	9	0	29	10	17	1	0	28	**3**	**103**	14	0	**120**	25	114	8	0	147	324
08:45 AM	10	**15**	**12**	0	**37**	**14**	27	2	1	44	3	91	**20**	**1**	115	24	97	**9**	0	130	326
Total Volume	38	44	32	0	114	38	104	11	6	159	10	363	59	1	433	132	468	28	0	628	1334
% App. Total	33.3	38.6	28.1	0		23.9	65.4	6.9	3.8		2.3	83.8	13.6	0.2		21	74.5	4.5	0		
PHF	.864	.733	.667	.000	.770	.679	.765	.550	.375	.795	.833	.881	.738	.250	.902	.786	.807	.778	.000	.813	.914

SW 152nd Street & SW 87th Avenue

File Name : SW 152nd Street & SW 87th Avenue
Site Code : 00000000
Start Date : 5/26/2016
Page No : 4

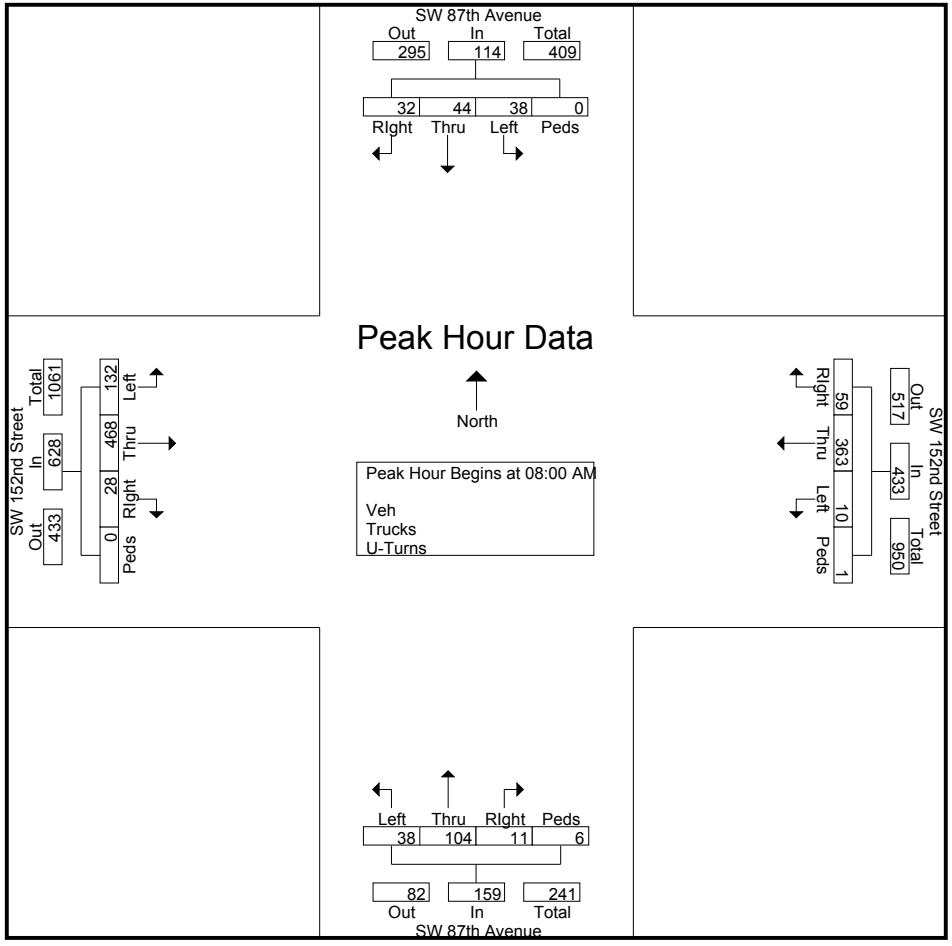

SW 152nd Street & SW 87th Avenue

File Name : SW 152nd Street & SW 87th Avenue
Site Code : 00000000
Start Date : 5/26/2016
Page No : 5

	SW 87th Avenue Southbound					SW 87th Avenue Northbound					SW 152nd Street Westbound					SW 152nd Street Eastbound					
Start Time	Left	Thru	RIght	Peds/Bike	App. Total	Left	Thru	RIght	Peds/Bike	App. Total	Left	Thru	RIght	Peds/Bike	App. Total	Left	Thru	RIght	Peds/Bike	App. Total	Int. Total
Peak Hour Analysis From 11:00 AM to 12:45 PM - Peak 1 of 1																					
Peak Hour for Entire Intersection Begins at 11:30 AM																					
11:30 AM	8	**12**	**28**	**1**	**49**	**10**	**8**	1	0	**19**	3	79	**20**	0	102	**8**	64	**9**	0	81	**251**
11:45 AM	9	6	11	0	26	8	7	1	0	16	2	**98**	5	0	**105**	3	**68**	8	0	79	226
12:00 PM	12	11	13	0	36	6	5	**2**	0	13	**6**	84	11	0	101	8	54	8	0	70	220
12:15 PM	**14**	12	13	0	39	4	3	1	0	8	1	86	13	0	100	7	68	8	0	**83**	230
Total Volume	43	41	65	1	150	28	23	5	0	56	12	347	49	0	408	26	254	33	0	313	927
% App. Total	28.7	27.3	43.3	0.7		50	41.1	8.9	0		2.9	85	12	0		8.3	81.2	10.5	0		
PHF	.768	.854	.580	.250	.765	.700	.719	.625	.000	.737	.500	.885	.613	.000	.971	.813	.934	.917	.000	.943	.923

SW 152nd Street & SW 87th Avenue

File Name : SW 152nd Street & SW 87th Avenue
Site Code : 00000000
Start Date : 5/26/2016
Page No : 6

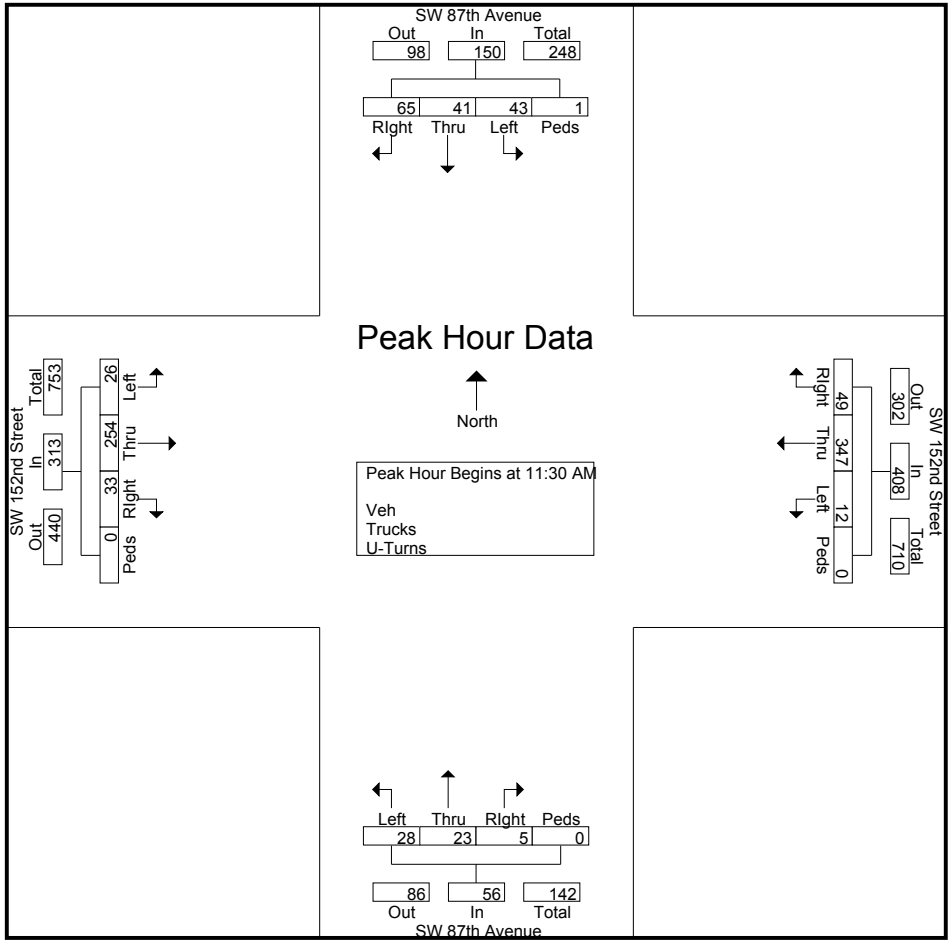

SW 152nd Street & SW 87th Avenue

File Name : SW 152nd Street & SW 87th Avenue
Site Code : 00000000
Start Date : 5/26/2016
Page No : 7

	SW 87th Avenue Southbound					SW 87th Avenue Northbound					SW 152nd Street Westbound					SW 152nd Street Eastbound					
Start Time	Left	Thru	RIght	Peds/Bike	App. Total	Left	Thru	RIght	Peds/Bike	App. Total	Left	Thru	RIght	Peds/Bike	App. Total	Left	Thru	RIght	Peds/Bike	App. Total	Int. Total
Peak Hour Analysis From 04:00 PM to 05:45 PM - Peak 1 of 1																					
Peak Hour for Entire Intersection Begins at 05:00 PM																					
05:00 PM	17	33	18	0	68	**10**	**13**	**3**	**1**	**27**	1	107	8	0	116	**8**	67	9	0	84	295
05:15 PM	12	33	23	**1**	69	7	5	3	0	15	5	121	11	0	137	7	58	**13**	0	78	299
05:30 PM	12	**34**	**43**	0	**89**	5	8	1	0	14	**7**	115	12	0	134	5	70	10	0	**85**	322
05:45 PM	**21**	29	32	1	83	7	7	2	1	17	6	**138**	**14**	0	**158**	3	**77**	5	0	85	**343**
Total Volume	62	129	116	2	309	29	33	9	2	73	19	481	45	0	545	23	272	37	0	332	1259
% App. Total	20.1	41.7	37.5	0.6		39.7	45.2	12.3	2.7		3.5	88.3	8.3	0		6.9	81.9	11.1	0		
PHF	.738	.949	.674	.500	.868	.725	.635	.750	.500	.676	.679	.871	.804	.000	.862	.719	.883	.712	.000	.976	.918

SW 152nd Street & SW 87th Avenue

File Name : SW 152nd Street & SW 87th Avenue
Site Code : 00000000
Start Date : 5/26/2016
Page No : 8

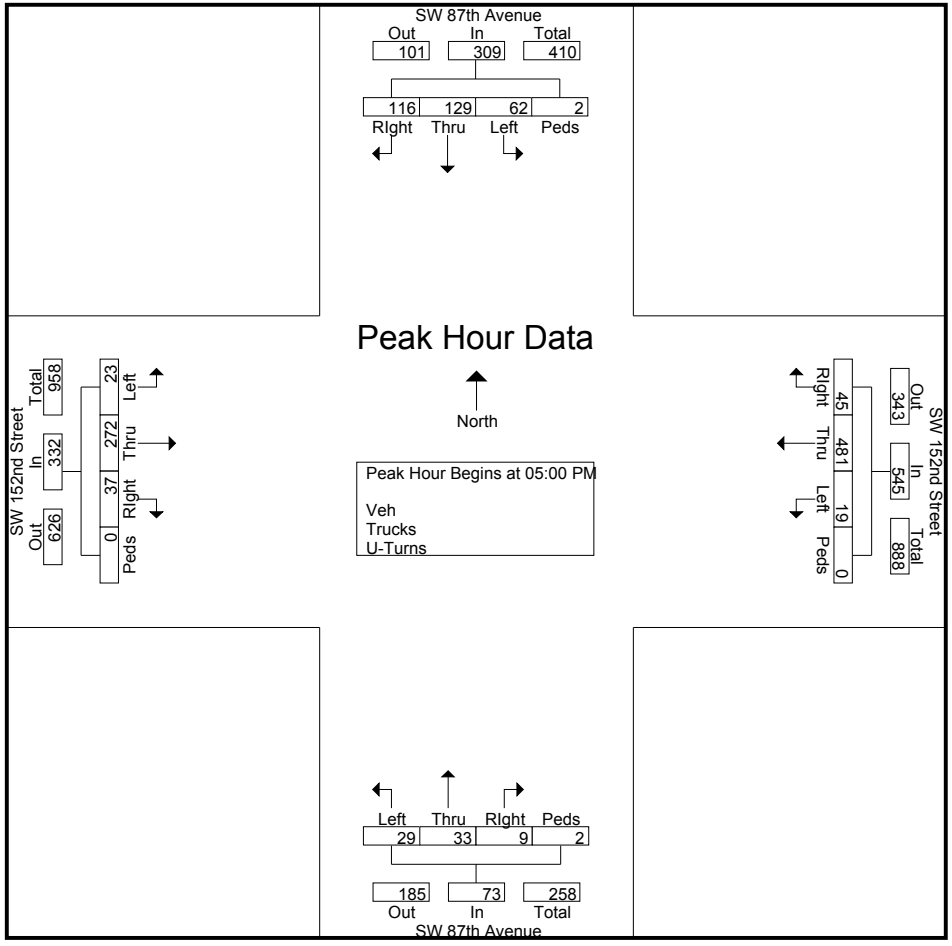

SW 152nd Street & South Dixie Hwy

File Name : SW 152nd Street & South Dixie Hwy
Site Code : 00000000
Start Date : 5/24/2016
Page No : 1

Groups Printed- Trucks

	South Dixie Hwy Southbound					South Dixie Hwy Northbound					SW 152nd Street Westbound					SW 152nd Street Eastbound					
Start Time	Left	Thru	RIght	Bikes	App. Total	Left	Thru	RIght	Bikes	App. Total	Left	Thru	RIght	Bikes	App. Total	Left	Thru	RIght	Bikes	App. Total	Int. Total
07:00 AM	1	13	1	0	15	0	1	1	0	2	0	0	0	0	0	1	0	1	0	2	19
07:15 AM	1	8	0	0	9	0	2	1	1	4	4	4	0	0	8	4	1	1	0	6	27
07:30 AM	1	2	2	0	5	0	13	2	0	15	2	0	0	0	2	0	4	0	0	4	26
07:45 AM	0	1	1	0	2	0	3	1	3	7	0	0	0	0	0	2	2	3	0	7	16
Total	3	24	4	0	31	0	19	5	4	28	6	4	0	0	10	7	7	5	0	19	88
08:00 AM	1	3	7	0	11	0	6	0	0	6	1	3	0	0	4	2	3	0	0	5	26
08:15 AM	1	3	3	0	7	2	6	0	0	8	0	1	0	0	1	2	1	0	0	3	19
08:30 AM	0	9	1	0	10	1	5	1	0	7	2	1	0	0	3	4	1	0	0	5	25
08:45 AM	1	4	1	0	6	2	1	0	0	3	0	2	2	0	4	3	4	2	0	9	22
Total	3	19	12	0	34	5	18	1	0	24	3	7	2	0	12	11	9	2	0	22	92
*** BREAK ***																					
11:00 AM	1	9	4	1	15	3	8	2	0	13	2	2	0	1	5	2	1	2	0	5	38
11:15 AM	1	8	3	0	12	3	10	0	0	13	3	1	0	2	6	5	1	3	0	9	40
11:30 AM	1	7	5	0	13	2	5	1	0	8	0	0	0	0	0	3	0	3	0	6	27
11:45 AM	1	13	2	0	16	2	11	0	1	14	2	0	0	1	3	1	0	0	0	1	34
Total	4	37	14	1	56	10	34	3	1	48	7	3	0	4	14	11	2	8	0	21	139
12:00 PM	1	7	1	0	9	3	7	1	1	12	1	1	0	0	2	1	2	0	0	3	26
12:15 PM	0	10	7	0	17	5	5	0	1	11	0	1	1	1	3	3	2	0	0	5	36
12:30 PM	1	4	3	0	8	1	8	0	0	9	0	1	0	0	1	1	1	1	0	3	21
12:45 PM	0	5	6	0	11	1	4	0	0	5	1	1	0	0	2	1	2	0	0	3	21
Total	2	26	17	0	45	10	24	1	2	37	2	4	1	1	8	6	7	1	0	14	104
*** BREAK ***																					
04:00 PM	0	5	1	0	6	2	7	0	0	9	0	1	0	0	1	2	2	2	0	6	22
04:15 PM	0	4	1	0	5	0	5	0	1	6	0	2	0	1	3	0	0	0	0	0	14
04:30 PM	1	8	1	0	10	4	3	1	0	8	0	1	0	0	1	0	0	1	0	1	20
04:45 PM	1	6	1	0	8	0	2	0	0	2	0	2	0	0	2	0	1	0	0	1	13
Total	2	23	4	0	29	6	17	1	1	25	0	6	0	1	7	2	3	3	0	8	69
05:00 PM	0	3	1	0	4	1	5	3	0	9	1	2	1	1	5	0	2	1	0	3	21
05:15 PM	1	4	1	0	6	1	0	0	1	2	0	1	0	2	3	1	0	1	0	2	13
05:30 PM	0	5	0	1	6	2	2	0	0	4	0	2	0	1	3	0	0	0	0	0	13
05:45 PM	0	4	0	0	4	1	2	0	0	3	1	0	0	0	1	0	1	1	0	2	10
Total	1	16	2	1	20	5	9	3	1	18	2	5	1	4	12	1	3	3	0	7	57
Grand Total	15	145	53	2	215	36	121	14	9	180	20	29	4	10	63	38	31	22	0	91	549
Apprch %	7	67.4	24.7	0.9		20	67.2	7.8	5		31.7	46	6.3	15.9		41.8	34.1	24.2	0		
Total %	2.7	26.4	9.7	0.4	39.2	6.6	22	2.6	1.6	32.8	3.6	5.3	0.7	1.8	11.5	6.9	5.6	4	0	16.6	

SW 152nd Street & South Dixie Hwy

File Name : SW 152nd Street & South Dixie Hwy
Site Code : 00000000
Start Date : 5/24/2016
Page No : 2

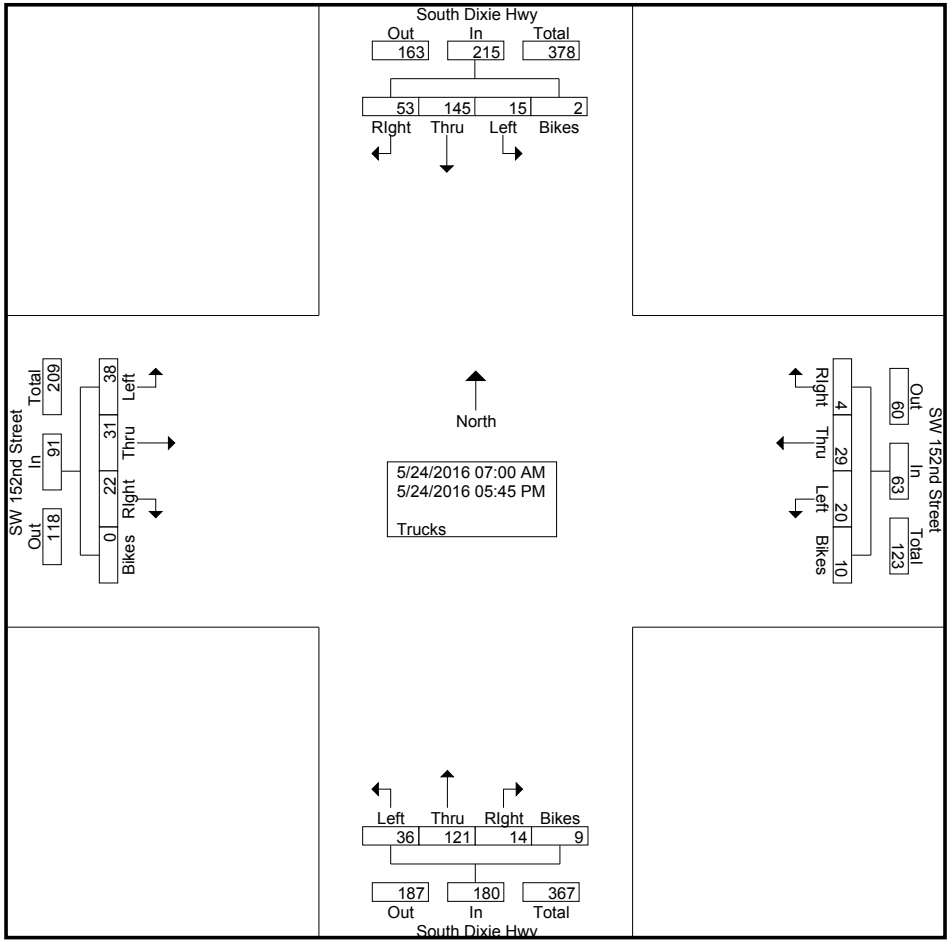

SW 152nd Street & South Dixie Hwy

File Name : SW 152nd Street & South Dixie Hwy
Site Code : 00000000
Start Date : 5/24/2016
Page No : 3

	South Dixie Hwy Southbound					South Dixie Hwy Northbound					SW 152nd Street Westbound					SW 152nd Street Eastbound					
Start Time	Left	Thru	RIght	Bikes	App. Total	Left	Thru	RIght	Bikes	App. Total	Left	Thru	RIght	Bikes	App. Total	Left	Thru	RIght	Bikes	App. Total	Int. Total
Peak Hour Analysis From 07:00 AM to 08:45 AM - Peak 1 of 1																					
Peak Hour for Entire Intersection Begins at 07:15 AM																					
07:15 AM	**1**	**8**	0	0	9	0	2	1	1	4	**4**	**4**	0	0	**8**	**4**	1	1	0	6	**27**
07:30 AM	1	2	2	0	5	0	**13**	**2**	0	**15**	2	0	0	0	2	0	**4**	0	0	4	26
07:45 AM	0	1	1	0	2	0	3	1	**3**	7	0	0	0	0	0	2	2	**3**	0	**7**	16
08:00 AM	1	3	**7**	0	**11**	0	6	0	0	6	1	3	0	0	4	2	3	0	0	5	26
Total Volume	3	14	10	0	27	0	24	4	4	32	7	7	0	0	14	8	10	4	0	22	95
% App. Total	11.1	51.9	37	0		0	75	12.5	12.5		50	50	0	0		36.4	45.5	18.2	0		
PHF	.750	.438	.357	.000	.614	.000	.462	.500	.333	.533	.438	.438	.000	.000	.438	.500	.625	.333	.000	.786	.880

SW 152nd Street & South Dixie Hwy

File Name : SW 152nd Street & South Dixie Hwy
Site Code : 00000000
Start Date : 5/24/2016
Page No : 4

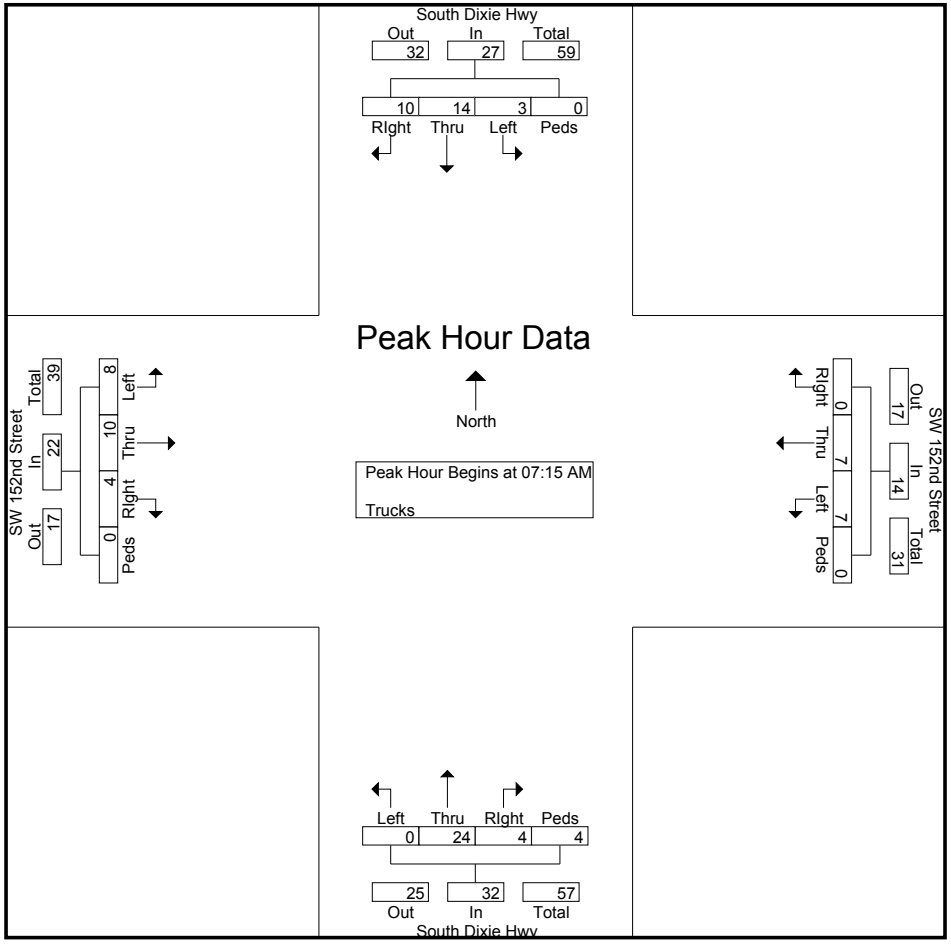

SW 152nd Street & South Dixie Hwy

File Name : SW 152nd Street & South Dixie Hwy
Site Code : 00000000
Start Date : 5/24/2016
Page No : 5

	South Dixie Hwy Southbound					South Dixie Hwy Northbound					SW 152nd Street Westbound					SW 152nd Street Eastbound					
Start Time	Left	Thru	RIght	Bikes	App. Total	Left	Thru	RIght	Bikes	App. Total	Left	Thru	RIght	Bikes	App. Total	Left	Thru	RIght	Bikes	App. Total	Int. Total
Peak Hour Analysis From 11:00 AM to 12:45 PM - Peak 1 of 1																					
Peak Hour for Entire Intersection Begins at 11:00 AM																					
11:00 AM	**1**	9	4	**1**	15	**3**	8	**2**	0	13	2	**2**	0	1	5	2	**1**	2	0	5	38
11:15 AM	1	8	3	0	12	3	10	0	0	13	**3**	1	0	**2**	**6**	**5**	1	**3**	0	**9**	**40**
11:30 AM	1	7	**5**	0	13	2	5	1	0	8	0	0	0	0	0	3	0	3	0	6	27
11:45 AM	1	**13**	2	0	**16**	2	**11**	0	**1**	**14**	2	0	0	1	3	1	0	0	0	1	34
Total Volume	4	37	14	1	56	10	34	3	1	48	7	3	0	4	14	11	2	8	0	21	139
% App. Total	7.1	66.1	25	1.8		20.8	70.8	6.2	2.1		50	21.4	0	28.6		52.4	9.5	38.1	0		
PHF	1.00	.712	.700	.250	.875	.833	.773	.375	.250	.857	.583	.375	.000	.500	.583	.550	.500	.667	.000	.583	.869

SW 152nd Street & South Dixie Hwy

File Name : SW 152nd Street & South Dixie Hwy
Site Code : 00000000
Start Date : 5/24/2016
Page No : 6

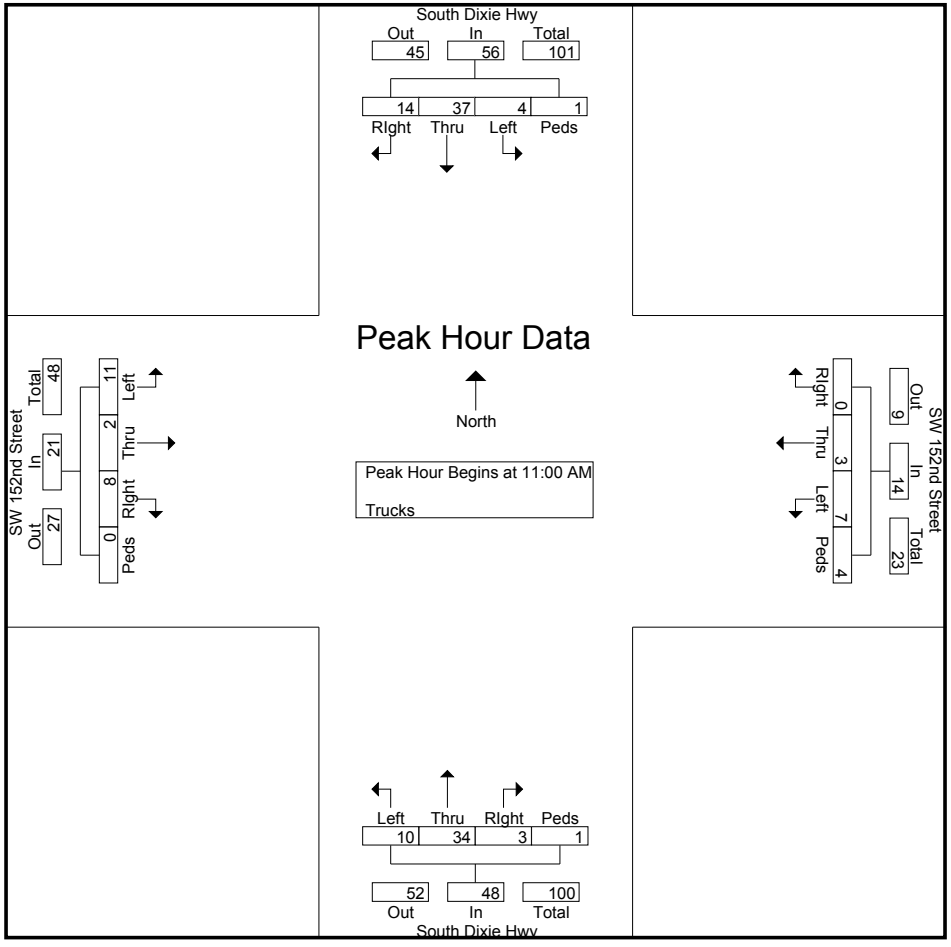

SW 152nd Street & South Dixie Hwy

File Name : SW 152nd Street & South Dixie Hwy
Site Code : 00000000
Start Date : 5/24/2016
Page No : 7

	South Dixie Hwy Southbound					South Dixie Hwy Northbound					SW 152nd Street Westbound					SW 152nd Street Eastbound					
Start Time	Left	Thru	RIght	Bikes	App. Total	Left	Thru	RIght	Bikes	App. Total	Left	Thru	RIght	Bikes	App. Total	Left	Thru	RIght	Bikes	App. Total	Int. Total
Peak Hour Analysis From 04:00 PM to 05:45 PM - Peak 1 of 1																					
Peak Hour for Entire Intersection Begins at 04:00 PM																					
04:00 PM	0	5	**1**	0	6	2	**7**	0	0	**9**	0	1	0	0	1	**2**	**2**	**2**	0	**6**	**22**
04:15 PM	0	4	1	0	5	0	5	0	**1**	6	0	**2**	0	**1**	**3**	0	0	0	0	0	14
04:30 PM	**1**	**8**	1	0	**10**	**4**	3	**1**	0	8	0	1	0	0	1	0	0	1	0	1	20
04:45 PM	1	6	1	0	8	0	2	0	0	2	0	2	0	0	2	0	1	0	0	1	13
Total Volume	2	23	4	0	29	6	17	1	1	25	0	6	0	1	7	2	3	3	0	8	69
% App. Total	6.9	79.3	13.8	0		24	68	4	4		0	85.7	0	14.3		25	37.5	37.5	0		
PHF	.500	.719	1.00	.000	.725	.375	.607	.250	.250	.694	.000	.750	.000	.250	.583	.250	.375	.375	.000	.333	.784

SW 152nd Street & South Dixie Hwy

File Name : SW 152nd Street & South Dixie Hwy
Site Code : 00000000
Start Date : 5/24/2016
Page No : 8

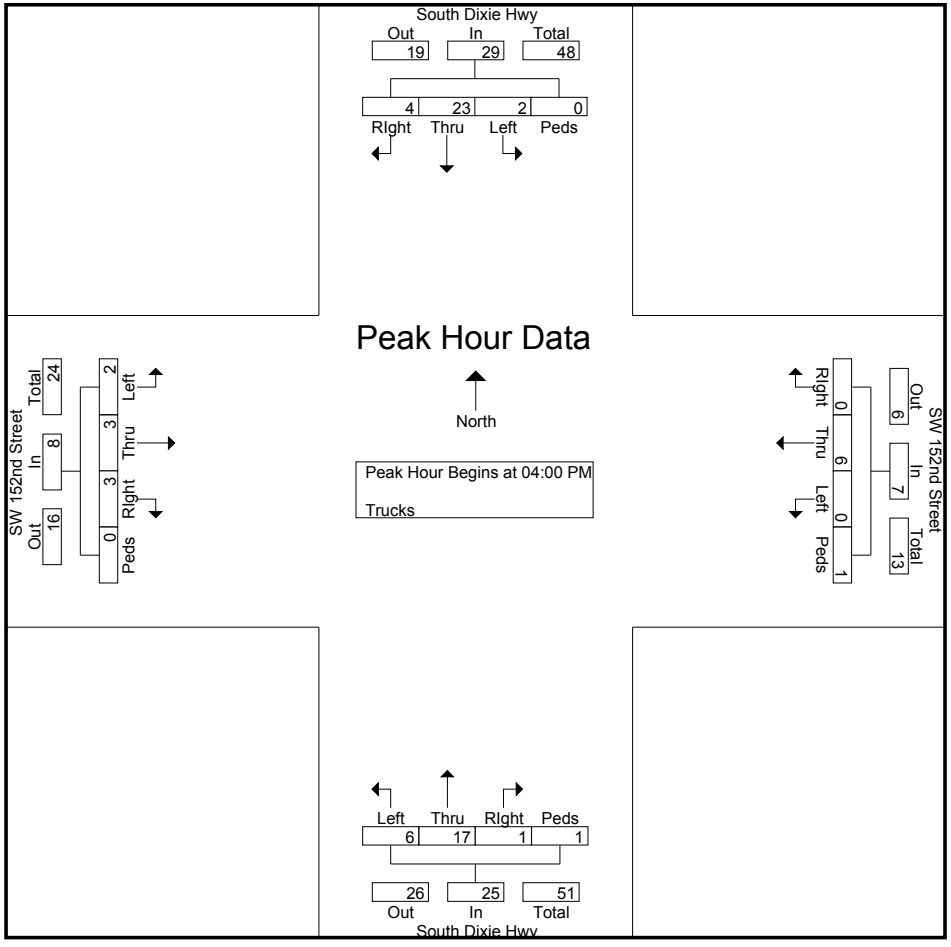

SW 152nd Street & South Dixie Hwy

File Name : SW 152nd Street & South Dixie Hwy
Site Code : 00000000
Start Date : 5/24/2016
Page No : 1

Groups Printed- Turns

	South Dixie Hwy Southbound					South Dixie Hwy Northbound					SW 152nd Street Westbound					SW 152nd Street Eastbound					
Start Time	Left	Thru	RIght	Peds/Bike	App. Total	Left	Thru	RIght	Peds/Bike	App. Total	Left	Thru	RIght	Peds/Bike	App. Total	Left	Thru	RIght	Peds/Bike	App. Total	Int. Total
07:00 AM	3	0	0	0	3	0	0	0	0	0	0	0	0	0	0	0	0	0	0	0	3
07:15 AM	1	0	0	0	1	0	0	0	0	0	0	0	0	0	0	0	0	0	0	0	1
07:30 AM	1	0	0	0	1	1	0	0	0	1	0	0	0	0	0	0	0	0	0	0	2
07:45 AM	1	0	0	0	1	0	0	0	0	0	0	0	0	0	0	0	0	0	0	0	1
Total	6	0	0	0	6	1	0	0	0	1	0	0	0	0	0	0	0	0	0	0	7
08:00 AM	0	0	0	0	0	1	0	0	0	1	0	0	0	0	0	0	0	0	0	0	1
08:15 AM	4	0	0	0	4	0	0	0	0	0	0	0	0	0	0	0	0	0	0	0	4
08:30 AM	0	0	0	0	0	1	0	0	0	1	0	0	0	0	0	0	0	0	0	0	1
08:45 AM	2	0	0	0	2	1	0	0	0	1	0	0	0	0	0	0	0	0	0	0	3
Total	6	0	0	0	6	3	0	0	0	3	0	0	0	0	0	0	0	0	0	0	9
*** BREAK ***																					
11:00 AM	2	0	0	0	2	3	0	0	0	3	0	0	0	0	0	0	0	0	0	0	5
11:15 AM	3	0	0	0	3	5	0	0	0	5	0	0	0	0	0	0	0	0	0	0	8
11:30 AM	3	0	0	0	3	1	0	0	0	1	0	0	0	0	0	0	0	0	0	0	4
11:45 AM	2	0	0	0	2	2	0	0	0	2	0	0	0	0	0	0	0	0	0	0	4
Total	10	0	0	0	10	11	0	0	0	11	0	0	0	0	0	0	0	0	0	0	21
12:00 PM	3	0	0	0	3	3	0	0	0	3	0	0	0	0	0	0	0	0	0	0	6
12:15 PM	2	0	0	0	2	6	0	0	0	6	0	0	0	0	0	0	0	0	0	0	8
12:30 PM	3	0	0	0	3	2	0	0	0	2	0	0	0	0	0	0	0	0	0	0	5
12:45 PM	2	0	0	0	2	3	0	0	0	3	0	0	0	0	0	0	0	0	0	0	5
Total	10	0	0	0	10	14	0	0	0	14	0	0	0	0	0	0	0	0	0	0	24
*** BREAK ***																					
04:00 PM	4	0	0	0	4	4	0	0	0	4	0	0	0	0	0	0	0	0	0	0	8
04:15 PM	3	0	0	0	3	4	0	0	0	4	0	0	0	0	0	0	0	0	0	0	7
04:30 PM	1	0	0	0	1	6	0	0	0	6	0	0	0	0	0	0	0	0	0	0	7
04:45 PM	1	0	0	0	1	5	0	0	0	5	0	0	0	0	0	0	0	0	0	0	6
Total	9	0	0	0	9	19	0	0	0	19	0	0	0	0	0	0	0	0	0	0	28
05:00 PM	3	0	0	0	3	4	0	0	0	4	0	0	0	0	0	0	0	0	0	0	7
05:15 PM	0	0	0	0	0	7	0	0	0	7	0	0	0	0	0	0	0	0	0	0	7
05:30 PM	0	0	0	0	0	3	0	0	0	3	0	0	0	0	0	0	0	0	0	0	3
05:45 PM	4	0	0	0	4	8	0	0	0	8	0	0	0	0	0	0	0	0	0	0	12
Total	7	0	0	0	7	22	0	0	0	22	0	0	0	0	0	0	0	0	0	0	29
Grand Total	48	0	0	0	48	70	0	0	0	70	0	0	0	0	0	0	0	0	0	0	118
Apprch %	100	0	0	0		100	0	0	0		0	0	0	0		0	0	0	0		
Total %	40.7	0	0	0	40.7	59.3	0	0	0	59.3	0	0	0	0	0	0	0	0	0	0	

SW 152nd Street & South Dixie Hwy

File Name : SW 152nd Street & South Dixie Hwy
Site Code : 00000000
Start Date : 5/24/2016
Page No : 2

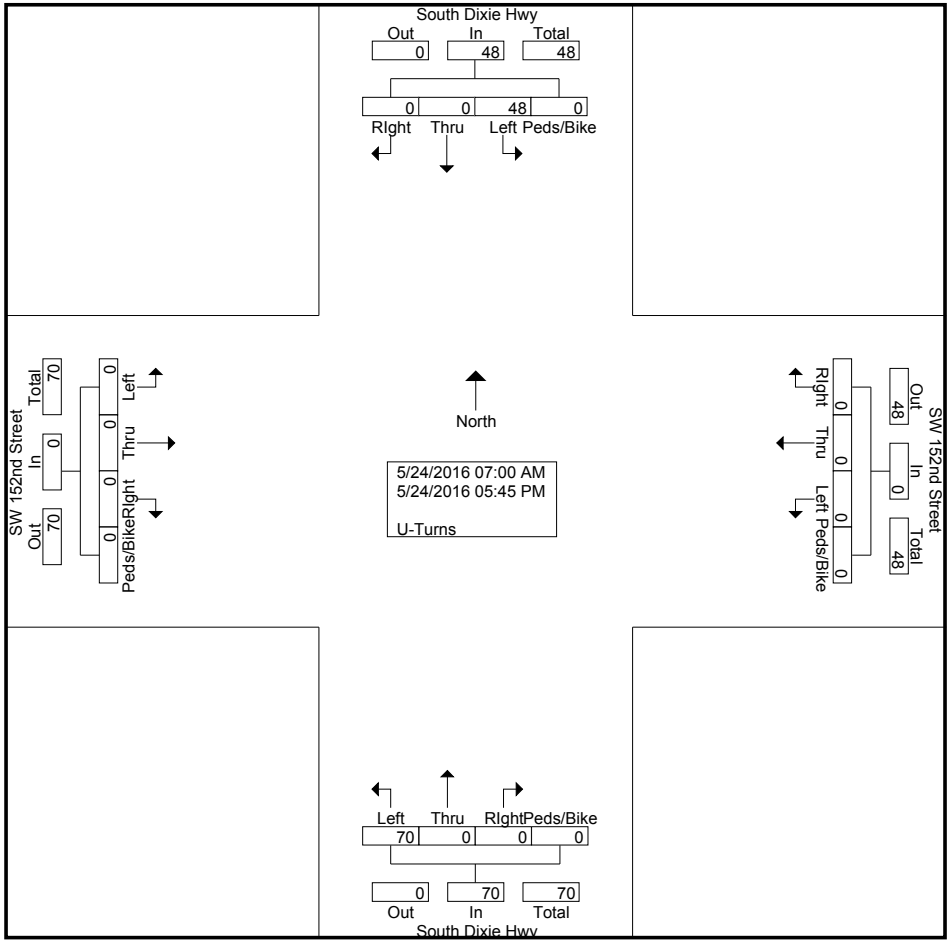

SW 152nd Street & South Dixie Hwy

File Name : SW 152nd Street & South Dixie Hwy
Site Code : 00000000
Start Date : 5/24/2016
Page No : 3

	South Dixie Hwy Southbound					South Dixie Hwy Northbound					SW 152nd Street Westbound					SW 152nd Street Eastbound					
Start Time	Left	Thru	RIght	Peds/Bike	App. Total	Left	Thru	RIght	Peds/Bike	App. Total	Left	Thru	RIght	Peds/Bike	App. Total	Left	Thru	RIght	Peds/Bike	App. Total	Int. Total
Peak Hour Analysis From 07:00 AM to 08:45 AM - Peak 1 of 1																					
Peak Hour for Entire Intersection Begins at 08:00 AM																					
08:00 AM	0	0	0	0	0	**1**	0	0	0	**1**	0	0	0	0	0	0	0	0	0	0	1
08:15 AM	**4**	0	0	0	**4**	0	0	0	0	0	0	0	0	0	0	0	0	0	0	0	**4**
08:30 AM	0	0	0	0	0	1	0	0	0	1	0	0	0	0	0	0	0	0	0	0	1
08:45 AM	2	0	0	0	2	1	0	0	0	1	0	0	0	0	0	0	0	0	0	0	3
Total Volume	6	0	0	0	6	3	0	0	0	3	0	0	0	0	0	0	0	0	0	0	9
% App. Total	100	0	0	0		100	0	0	0		0	0	0	0		0	0	0	0		
PHF	.375	.000	.000	.000	.375	.750	.000	.000	.000	.750	.000	.000	.000	.000	.000	.000	.000	.000	.000	.000	.563

SW 152nd Street & South Dixie Hwy

File Name : SW 152nd Street & South Dixie Hwy
Site Code : 00000000
Start Date : 5/24/2016
Page No : 4

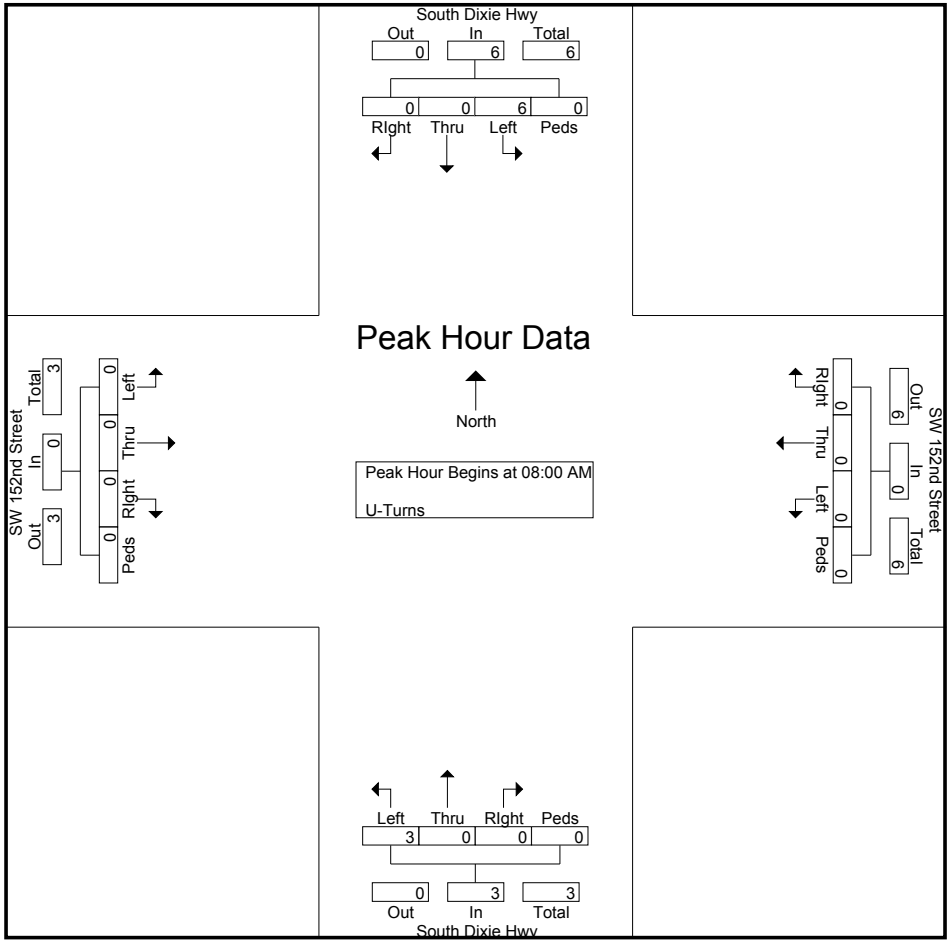

SW 152nd Street & South Dixie Hwy

File Name : SW 152nd Street & South Dixie Hwy
Site Code : 00000000
Start Date : 5/24/2016
Page No : 5

	South Dixie Hwy Southbound					South Dixie Hwy Northbound					SW 152nd Street Westbound					SW 152nd Street Eastbound					
Start Time	Left	Thru	RIght	Peds/Bike	App. Total	Left	Thru	RIght	Peds/Bike	App. Total	Left	Thru	RIght	Peds/Bike	App. Total	Left	Thru	RIght	Peds/Bike	App. Total	Int. Total
Peak Hour Analysis From 11:00 AM to 12:45 PM - Peak 1 of 1																					
Peak Hour for Entire Intersection Begins at 12:00 PM																					
12:00 PM	**3**	0	0	0	**3**	3	0	0	0	3	0	0	0	0	0	0	0	0	0	0	6
12:15 PM	2	0	0	0	2	**6**	0	0	0	**6**	0	0	0	0	0	0	0	0	0	0	**8**
12:30 PM	3	0	0	0	3	2	0	0	0	2	0	0	0	0	0	0	0	0	0	0	5
12:45 PM	2	0	0	0	2	3	0	0	0	3	0	0	0	0	0	0	0	0	0	0	5
Total Volume	10	0	0	0	10	14	0	0	0	14	0	0	0	0	0	0	0	0	0	0	24
% App. Total	100	0	0	0		100	0	0	0		0	0	0	0		0	0	0	0		
PHF	.833	.000	.000	.000	.833	.583	.000	.000	.000	.583	.000	.000	.000	.000	.000	.000	.000	.000	.000	.000	.750

SW 152nd Street & South Dixie Hwy

File Name : SW 152nd Street & South Dixie Hwy
Site Code : 00000000
Start Date : 5/24/2016
Page No : 6

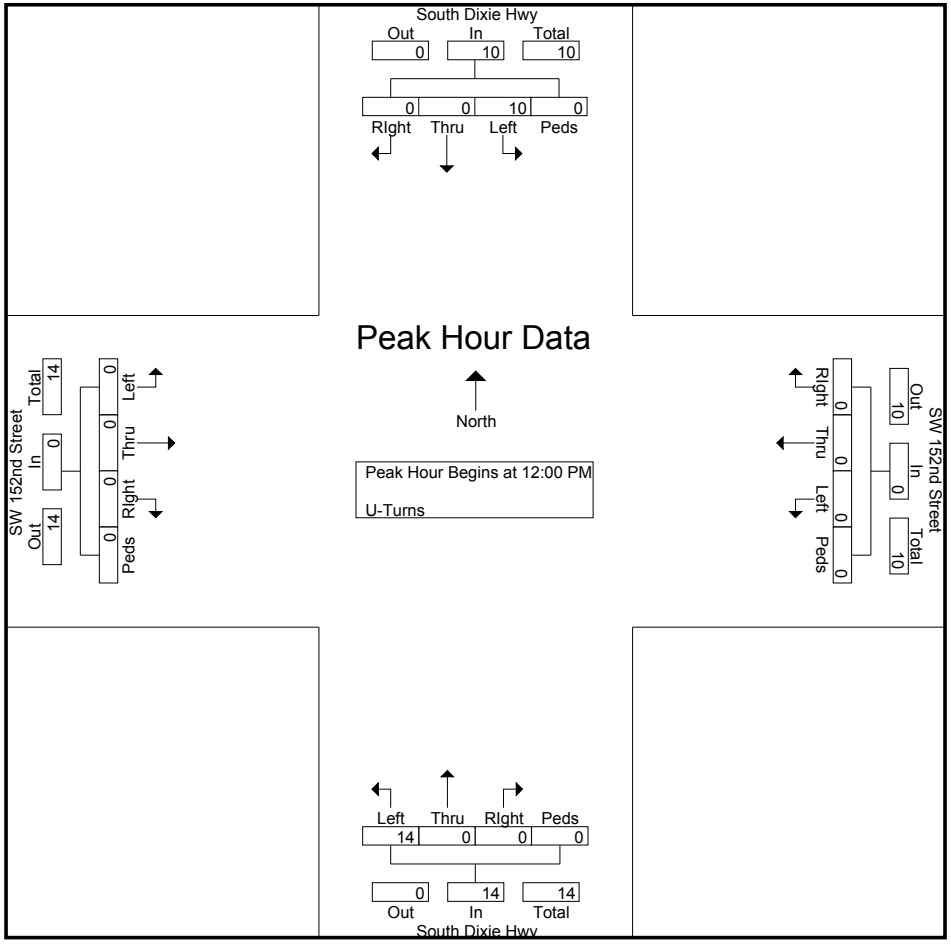

SW 152nd Street & South Dixie Hwy

File Name : SW 152nd Street & South Dixie Hwy
Site Code : 00000000
Start Date : 5/24/2016
Page No : 7

	South Dixie Hwy Southbound					South Dixie Hwy Northbound					SW 152nd Street Westbound					SW 152nd Street Eastbound					
Start Time	Left	Thru	RIght	Peds/Bike	App. Total	Left	Thru	RIght	Peds/Bike	App. Total	Left	Thru	RIght	Peds/Bike	App. Total	Left	Thru	RIght	Peds/Bike	App. Total	Int. Total
Peak Hour Analysis From 04:00 PM to 05:45 PM - Peak 1 of 1																					
Peak Hour for Entire Intersection Begins at 05:00 PM																					
05:00 PM	3	0	0	0	3	4	0	0	0	4	0	0	0	0	0	0	0	0	0	0	7
05:15 PM	0	0	0	0	0	7	0	0	0	7	0	0	0	0	0	0	0	0	0	0	7
05:30 PM	0	0	0	0	0	3	0	0	0	3	0	0	0	0	0	0	0	0	0	0	3
05:45 PM	**4**	0	0	0	**4**	**8**	0	0	0	**8**	0	0	0	0	0	0	0	0	0	0	**12**
Total Volume	7	0	0	0	7	22	0	0	0	22	0	0	0	0	0	0	0	0	0	0	29
% App. Total	100	0	0	0		100	0	0	0		0	0	0	0		0	0	0	0		
PHF	.438	.000	.000	.000	.438	.688	.000	.000	.000	.688	.000	.000	.000	.000	.000	.000	.000	.000	.000	.000	.604

SW 152nd Street & South Dixie Hwy

File Name : SW 152nd Street & South Dixie Hwy
Site Code : 00000000
Start Date : 5/24/2016
Page No : 8

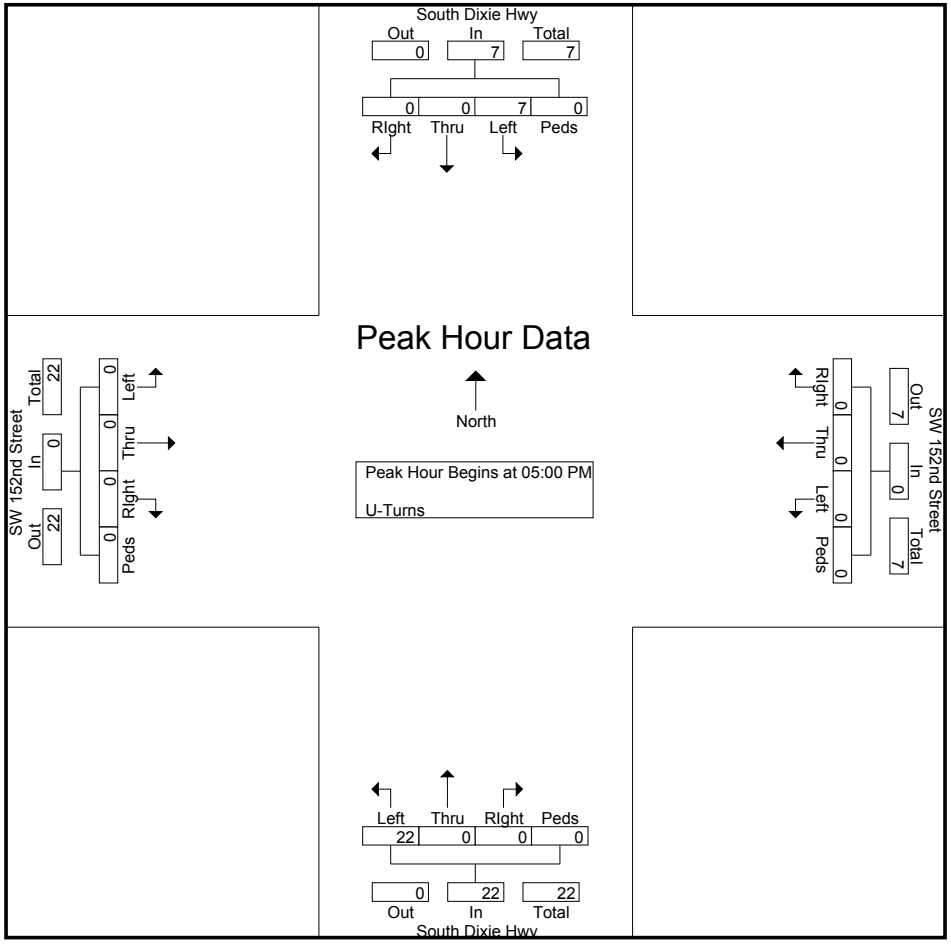

SW 152nd Street & South Dixie Hwy

File Name : SW 152nd Street & South Dixie Hwy
Site Code : 00000000
Start Date : 5/24/2016
Page No : 1

Groups Printed- Veh - Trucks - Turns

	South Dixie Hwy Southbound					South Dixie Hwy Northbound					SW 152nd Street Westbound					SW 152nd Street Eastbound					
Start Time	Left	Thru	RIght	Peds/Bike	App. Total	Left	Thru	RIght	Peds/Bike	App. Total	Left	Thru	RIght	Peds/Bike	App. Total	Left	Thru	RIght	Peds/Bike	App. Total	Int. Total
07:00 AM	9	192	78	0	279	71	595	21	2	689	11	78	3	0	92	151	64	26	0	241	1301
07:15 AM	13	319	54	0	386	67	637	21	6	731	30	40	2	2	74	154	81	25	0	260	1451
07:30 AM	22	330	56	0	408	85	635	30	4	754	24	54	2	1	81	129	52	41	0	222	1465
07:45 AM	22	333	47	2	404	88	577	27	5	697	23	51	4	1	79	158	72	22	0	252	1432
Total	66	1174	235	2	1477	311	2444	99	17	2871	88	223	11	4	326	592	269	114	0	975	5649
08:00 AM	21	261	71	0	353	103	551	22	8	684	36	69	7	2	114	170	80	27	0	277	1428
08:15 AM	21	277	48	0	346	88	611	24	6	729	39	60	13	1	113	147	80	46	0	273	1461
08:30 AM	23	305	47	0	375	89	643	26	2	760	53	56	6	1	116	133	60	31	0	224	1475
08:45 AM	26	313	67	0	406	89	553	35	4	681	36	43	5	1	85	144	84	58	0	286	1458
Total	91	1156	233	0	1480	369	2358	107	20	2854	164	228	31	5	428	594	304	162	0	1060	5822
*** BREAK ***																					
11:00 AM	24	395	76	1	496	63	441	18	0	522	39	64	17	2	122	99	38	67	0	204	1344
11:15 AM	32	424	79	0	535	91	492	17	0	600	32	39	23	3	97	99	38	62	0	199	1431
11:30 AM	20	358	68	0	446	81	420	15	2	518	39	51	35	2	127	104	42	62	0	208	1299
11:45 AM	24	383	87	0	494	65	493	15	2	575	38	39	14	3	94	72	28	53	0	153	1316
Total	100	1560	310	1	1971	300	1846	65	4	2215	148	193	89	10	440	374	146	244	0	764	5390
12:00 PM	28	393	57	4	482	83	410	19	3	515	53	56	22	0	131	120	33	62	0	215	1343
12:15 PM	27	442	98	0	567	86	435	29	4	554	46	48	20	1	115	88	43	56	0	187	1423
12:30 PM	32	451	78	0	561	99	462	15	1	577	46	45	22	0	113	110	48	60	0	218	1469
12:45 PM	16	383	89	3	491	62	386	20	1	469	49	57	18	0	124	104	35	53	0	192	1276
Total	103	1669	322	7	2101	330	1693	83	9	2115	194	206	82	1	483	422	159	231	0	812	5511
*** BREAK ***																					
04:00 PM	21	630	112	0	763	84	366	15	1	466	42	68	10	0	120	90	53	63	0	206	1555
04:15 PM	21	594	81	0	696	85	334	16	2	437	80	67	10	2	159	100	50	64	0	214	1506
04:30 PM	24	588	119	0	731	82	311	20	0	413	52	87	6	1	146	96	43	83	0	222	1512
04:45 PM	16	599	88	1	704	74	356	19	1	450	59	73	12	0	144	83	23	48	0	154	1452
Total	82	2411	400	1	2894	325	1367	70	4	1766	233	295	38	3	569	369	169	258	0	796	6025
05:00 PM	28	658	96	0	782	85	343	28	2	458	53	61	5	2	121	90	50	60	0	200	1561
05:15 PM	21	576	83	1	681	87	321	22	3	433	76	76	6	3	161	92	43	75	0	210	1485
05:30 PM	12	646	121	1	780	82	305	20	1	408	68	83	8	1	160	78	41	59	0	178	1526
05:45 PM	21	716	106	1	844	60	339	13	4	416	64	76	10	0	150	64	32	63	0	159	1569
Total	82	2596	406	3	3087	314	1308	83	10	1715	261	296	29	6	592	324	166	257	0	747	6141
Grand Total	524	10566	1906	14	13010	1949	11016	507	64	13536	1088	1441	280	29	2838	2675	1213	1266	0	5154	34538
Apprch %	4	81.2	14.7	0.1		14.4	81.4	3.7	0.5		38.3	50.8	9.9	1		51.9	23.5	24.6	0		
Total %	1.5	30.6	5.5	0	37.7	5.6	31.9	1.5	0.2	39.2	3.2	4.2	0.8	0.1	8.2	7.7	3.5	3.7	0	14.9	
Veh	461	10421	1853	12	12747	1843	10895	493	55	13286	1068	1412	276	19	2775	2637	1182	1244	0	5063	33871
% Veh	88	98.6	97.2	85.7	98	94.6	98.9	97.2	85.9	98.2	98.2	98	98.6	65.5	97.8	98.6	97.4	98.3	0	98.2	98.1

SW 152nd Street & South Dixie Hwy

File Name : SW 152nd Street & South Dixie Hwy
Site Code : 00000000
Start Date : 5/24/2016
Page No : 2

Groups Printed- Veh - Trucks - Turns

	South Dixie Hwy Southbound					South Dixie Hwy Northbound					SW 152nd Street Westbound					SW 152nd Street Eastbound					
	Left	Thru	RIght	Peds/Bike	App. Total	Left	Thru	RIght	Peds/Bike	App. Total	Left	Thru	RIght	Peds/Bike	App. Total	Left	Thru	RIght	Peds/Bike	App. Total	Int. Total
Trucks	15	145	53	2	215	36	121	14	9	180	20	29	4	10	63	38	31	22	0	91	549
% Trucks	2.9	1.4	2.8	14.3	1.7	1.8	1.1	2.8	14.1	1.3	1.8	2	1.4	34.5	2.2	1.4	2.6	1.7	0	1.8	1.6
U-Turns	48	0	0	0	48	70	0	0	0	70	0	0	0	0	0	0	0	0	0	0	118
% U-Turns	9.2	0	0	0	0.4	3.6	0	0	0	0.5	0	0	0	0	0	0	0	0	0	0	0.3

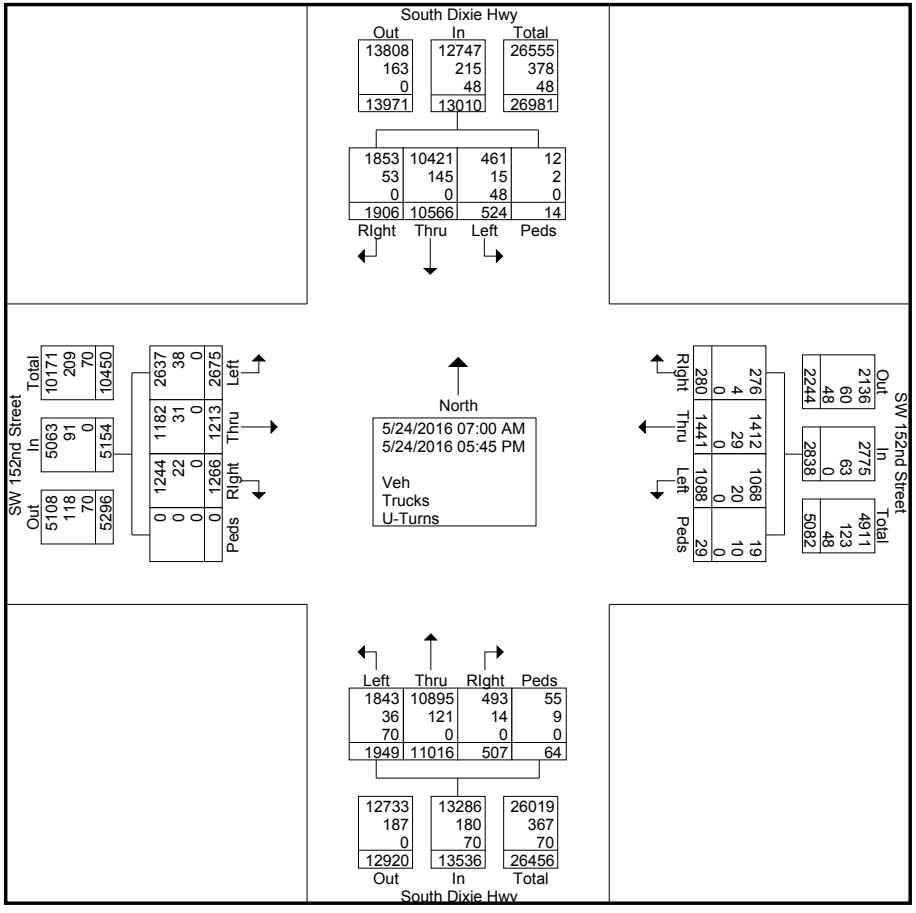

SW 152nd Street & South Dixie Hwy

File Name : SW 152nd Street & South Dixie Hwy
Site Code : 00000000
Start Date : 5/24/2016
Page No : 3

	South Dixie Hwy Southbound					South Dixie Hwy Northbound					SW 152nd Street Westbound					SW 152nd Street Eastbound					
Start Time	Left	Thru	RIght	Peds/Bike	App. Total	Left	Thru	RIght	Peds/Bike	App. Total	Left	Thru	RIght	Peds/Bike	App. Total	Left	Thru	RIght	Peds/Bike	App. Total	Int. Total
Peak Hour Analysis From 07:00 AM to 08:45 AM - Peak 1 of 1																					
Peak Hour for Entire Intersection Begins at 08:00 AM																					
08:00 AM	21	261	**71**	0	353	**103**	551	22	**8**	684	36	**69**	7	**2**	114	**170**	80	27	0	277	1428
08:15 AM	21	277	48	0	346	88	611	24	6	729	39	60	**13**	1	113	147	80	46	0	273	1461
08:30 AM	23	305	47	0	375	89	**643**	26	2	**760**	**53**	56	6	1	**116**	133	60	31	0	224	**1475**
08:45 AM	**26**	**313**	67	0	**406**	89	553	**35**	4	681	36	43	5	1	85	144	**84**	**58**	0	**286**	1458
Total Volume	91	1156	233	0	1480	369	2358	107	20	2854	164	228	31	5	428	594	304	162	0	1060	5822
% App. Total	6.1	78.1	15.7	0		12.9	82.6	3.7	0.7		38.3	53.3	7.2	1.2		56	28.7	15.3	0		
PHF	.875	.923	.820	.000	.911	.896	.917	.764	.625	.939	.774	.826	.596	.625	.922	.874	.905	.698	.000	.927	.987

SW 152nd Street & South Dixie Hwy

File Name : SW 152nd Street & South Dixie Hwy
Site Code : 00000000
Start Date : 5/24/2016
Page No : 4

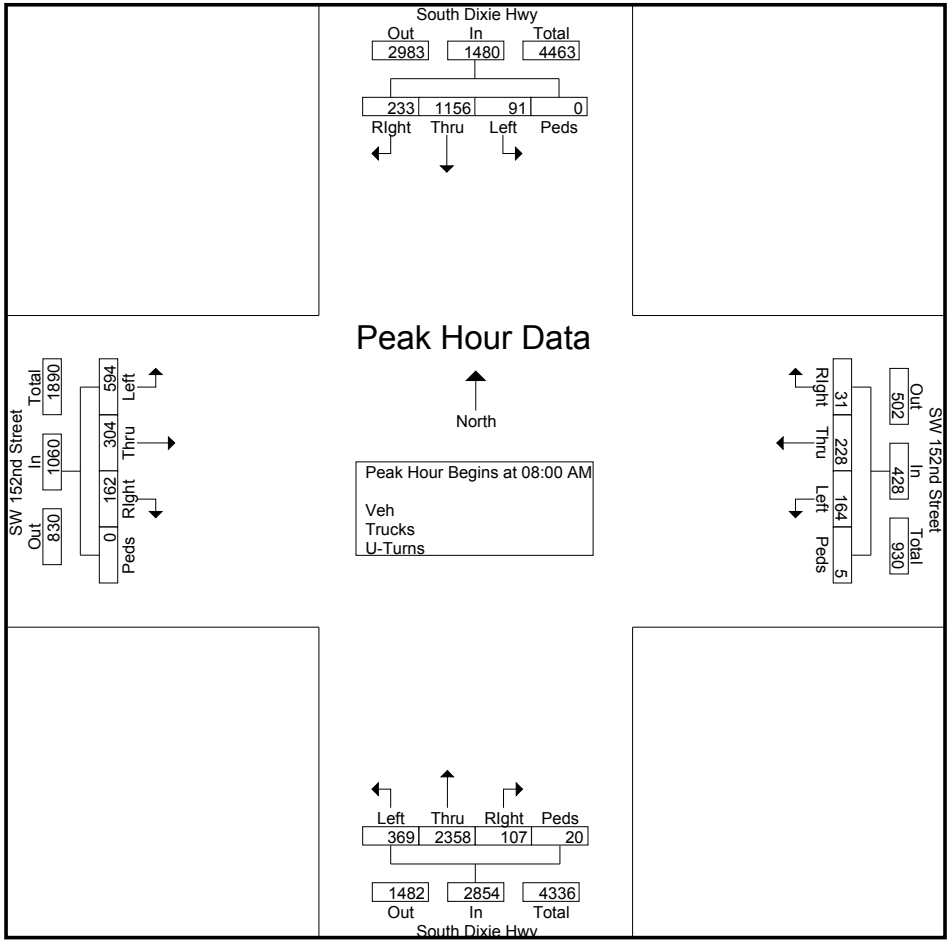

SW 152nd Street & South Dixie Hwy

File Name : SW 152nd Street & South Dixie Hwy
Site Code : 00000000
Start Date : 5/24/2016
Page No : 5

	South Dixie Hwy Southbound					South Dixie Hwy Northbound					SW 152nd Street Westbound					SW 152nd Street Eastbound					
Start Time	Left	Thru	RIght	Peds/Bike	App. Total	Left	Thru	RIght	Peds/Bike	App. Total	Left	Thru	RIght	Peds/Bike	App. Total	Left	Thru	RIght	Peds/Bike	App. Total	Int. Total
Peak Hour Analysis From 11:00 AM to 12:45 PM - Peak 1 of 1																					
Peak Hour for Entire Intersection Begins at 11:45 AM																					
11:45 AM	24	383	87	0	494	65	**493**	15	2	575	38	39	14	**3**	94	72	28	53	0	153	1316
12:00 PM	28	393	57	**4**	482	83	410	19	3	515	**53**	**56**	**22**	0	**131**	**120**	33	**62**	0	215	1343
12:15 PM	27	442	**98**	0	**567**	86	435	**29**	**4**	554	46	48	20	1	115	88	43	56	0	187	1423
12:30 PM	**32**	**451**	78	0	561	**99**	462	15	1	**577**	46	45	22	0	113	110	**48**	60	0	**218**	**1469**
Total Volume	111	1669	320	4	2104	333	1800	78	10	2221	183	188	78	4	453	390	152	231	0	773	5551
% App. Total	5.3	79.3	15.2	0.2		15	81	3.5	0.5		40.4	41.5	17.2	0.9		50.5	19.7	29.9	0		
PHF	.867	.925	.816	.250	.928	.841	.913	.672	.625	.962	.863	.839	.886	.333	.865	.813	.792	.931	.000	.886	.945

SW 152nd Street & South Dixie Hwy

File Name : SW 152nd Street & South Dixie Hwy
Site Code : 00000000
Start Date : 5/24/2016
Page No : 6

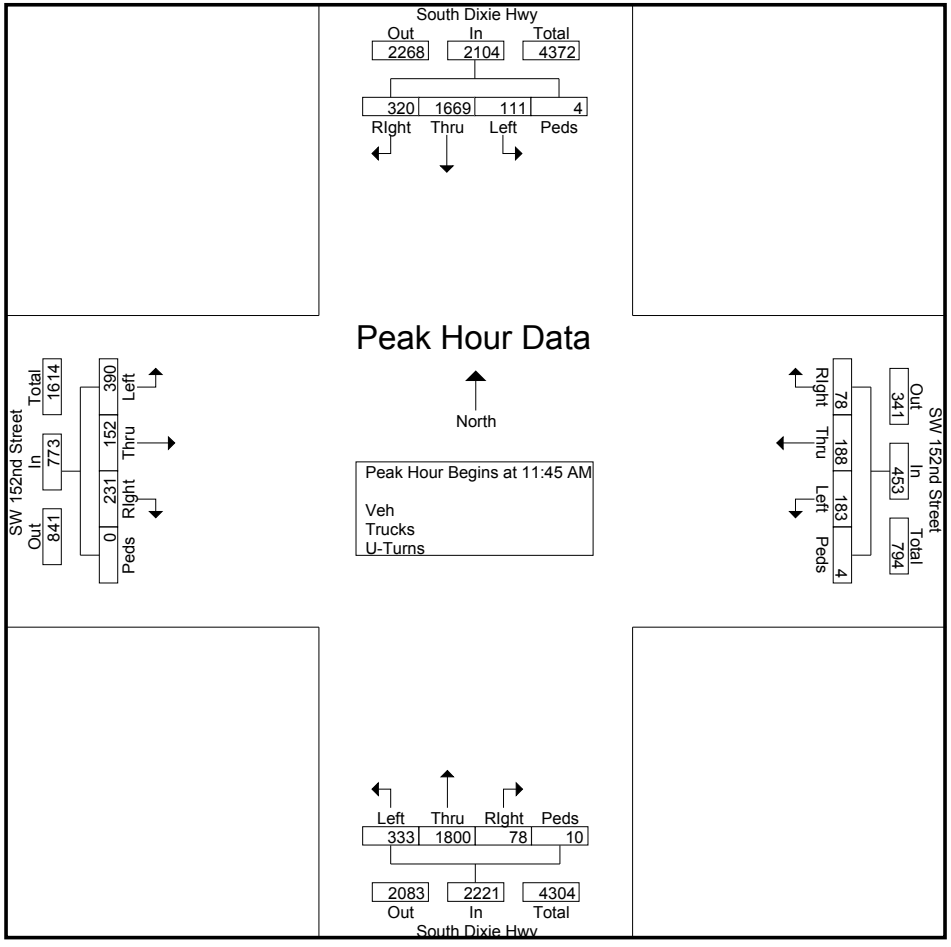

SW 152nd Street & South Dixie Hwy

File Name : SW 152nd Street & South Dixie Hwy
Site Code : 00000000
Start Date : 5/24/2016
Page No : 7

	South Dixie Hwy Southbound					South Dixie Hwy Northbound					SW 152nd Street Westbound					SW 152nd Street Eastbound					
Start Time	Left	Thru	RIght	Peds/Bike	App. Total	Left	Thru	RIght	Peds/Bike	App. Total	Left	Thru	RIght	Peds/Bike	App. Total	Left	Thru	RIght	Peds/Bike	App. Total	Int. Total
Peak Hour Analysis From 04:00 PM to 05:45 PM - Peak 1 of 1																					
Peak Hour for Entire Intersection Begins at 05:00 PM																					
05:00 PM	**28**	658	96	0	782	85	**343**	**28**	2	**458**	53	61	5	2	121	90	**50**	60	0	200	1561
05:15 PM	21	576	83	**1**	681	**87**	321	22	3	433	**76**	76	6	**3**	**161**	**92**	43	**75**	0	**210**	1485
05:30 PM	12	646	**121**	1	780	82	305	20	1	408	68	**83**	8	1	160	78	41	59	0	178	1526
05:45 PM	21	**716**	106	1	**844**	60	339	13	**4**	416	64	76	**10**	0	150	64	32	63	0	159	**1569**
Total Volume	82	2596	406	3	3087	314	1308	83	10	1715	261	296	29	6	592	324	166	257	0	747	6141
% App. Total	2.7	84.1	13.2	0.1		18.3	76.3	4.8	0.6		44.1	50	4.9	1		43.4	22.2	34.4	0		
PHF	.732	.906	.839	.750	.914	.902	.953	.741	.625	.936	.859	.892	.725	.500	.919	.880	.830	.857	.000	.889	.978

SW 152nd Street & South Dixie Hwy

File Name : SW 152nd Street & South Dixie Hwy
Site Code : 00000000
Start Date : 5/24/2016
Page No : 8

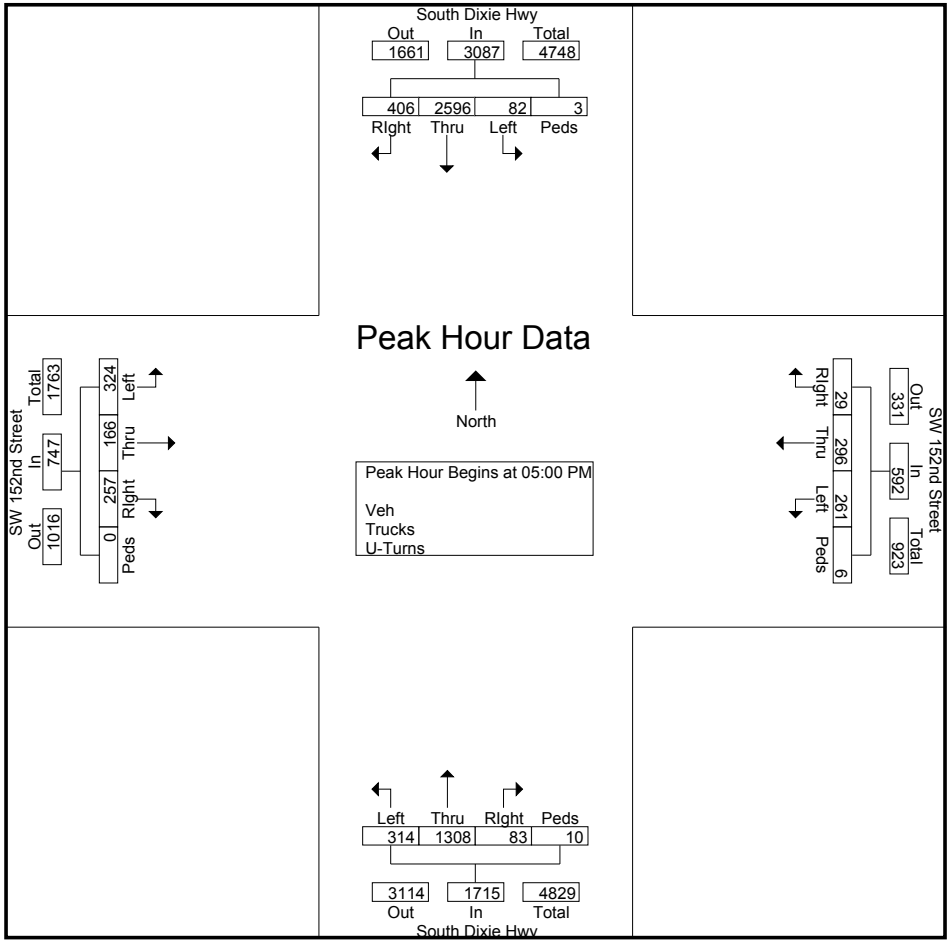

SW 152nd Street & SW 92nd Avenue

File Name : SW 152nd Street & SW 92nd Avenue
Site Code : 00000000
Start Date : 5/24/2016
Page No : 1

Groups Printed- Trucks

	SW 92nd Avenue Southbound					SW 92nd Avenue Northbound					SW 152nd Street Westbound					SW 152nd Street Eastbound					
Start Time	Left	Thru	RIght	Bikes	App. Total	Left	Thru	RIght	Bikes	App. Total	Left	Thru	RIght	Bikes	App. Total	Left	Thru	RIght	Bikes	App. Total	Int. Total
07:00 AM	0	0	0	0	0	0	0	0	0	0	0	2	0	1	3	0	2	0	0	2	5
07:15 AM	0	0	2	2	4	0	0	0	0	0	0	4	1	0	5	0	6	0	0	6	15
07:30 AM	0	0	1	0	1	0	0	0	0	0	0	4	1	0	5	0	4	0	0	4	10
07:45 AM	0	0	1	0	1	0	0	0	0	0	0	1	0	0	1	0	7	0	0	7	9
Total	0	0	4	2	6	0	0	0	0	0	0	11	2	1	14	0	19	0	0	19	39
08:00 AM	0	0	0	0	0	0	0	0	0	0	0	10	1	0	11	0	5	0	0	5	16
08:15 AM	0	0	1	0	1	0	0	0	0	0	0	9	1	0	10	0	3	0	0	3	14
08:30 AM	0	0	0	3	3	0	0	0	0	0	0	4	0	0	4	0	5	0	0	5	12
08:45 AM	0	0	1	1	2	0	0	0	0	0	0	5	1	0	6	0	9	0	0	9	17
Total	0	0	2	4	6	0	0	0	0	0	0	28	3	0	31	0	22	0	0	22	59
*** BREAK ***																					
11:00 AM	0	0	1	1	2	0	0	0	0	0	0	6	1	0	7	0	5	0	0	5	14
11:15 AM	0	0	1	0	1	0	0	0	0	0	0	9	0	0	9	0	9	0	0	9	19
11:30 AM	0	0	1	0	1	0	0	0	0	0	0	5	3	0	8	0	6	0	0	6	15
11:45 AM	0	0	1	0	1	0	0	0	0	0	0	7	0	0	7	0	1	0	0	1	9
Total	0	0	4	1	5	0	0	0	0	0	0	27	4	0	31	0	21	0	0	21	57
12:00 PM	0	0	1	0	1	0	0	0	0	0	0	6	0	0	6	0	3	0	0	3	10
12:15 PM	0	0	0	1	1	0	0	0	0	0	0	12	1	0	13	0	5	0	0	5	19
12:30 PM	0	0	0	0	0	0	0	0	0	0	0	4	1	0	5	0	3	0	0	3	8
12:45 PM	0	0	0	1	1	0	0	0	0	0	0	7	0	0	7	0	3	0	0	3	11
Total	0	0	1	2	3	0	0	0	0	0	0	29	2	0	31	0	14	0	0	14	48
*** BREAK ***																					
04:00 PM	0	0	1	1	2	0	0	0	0	0	0	5	0	0	5	0	6	0	0	6	13
04:15 PM	0	0	2	0	2	0	0	0	0	0	0	3	0	0	3	0	0	0	0	0	5
04:30 PM	0	0	1	0	1	0	0	0	0	0	0	4	1	0	5	0	1	0	0	1	7
04:45 PM	0	0	3	0	3	0	0	0	0	0	0	4	0	0	4	0	1	0	0	1	8
Total	0	0	7	1	8	0	0	0	0	0	0	16	1	0	17	0	8	0	0	8	33
05:00 PM	0	0	1	0	1	0	0	0	0	0	0	6	0	0	6	0	3	0	0	3	10
05:15 PM	0	0	0	0	0	0	0	0	0	0	0	5	0	0	5	0	2	0	0	2	7
05:30 PM	0	0	0	0	0	0	0	0	0	0	0	4	0	0	4	0	0	0	0	0	4
05:45 PM	0	0	2	0	2	0	0	0	0	0	0	3	0	0	3	0	2	0	0	2	7
Total	0	0	3	0	3	0	0	0	0	0	0	18	0	0	18	0	7	0	0	7	28
Grand Total	0	0	21	10	31	0	0	0	0	0	0	129	12	1	142	0	91	0	0	91	264
Apprch %	0	0	67.7	32.3		0	0	0	0		0	90.8	8.5	0.7		0	100	0	0		
Total %	0	0	8	3.8	11.7	0	0	0	0	0	0	48.9	4.5	0.4	53.8	0	34.5	0	0	34.5	

SW 152nd Street & SW 92nd Avenue

File Name : SW 152nd Street & SW 92nd Avenue
Site Code : 00000000
Start Date : 5/24/2016
Page No : 2

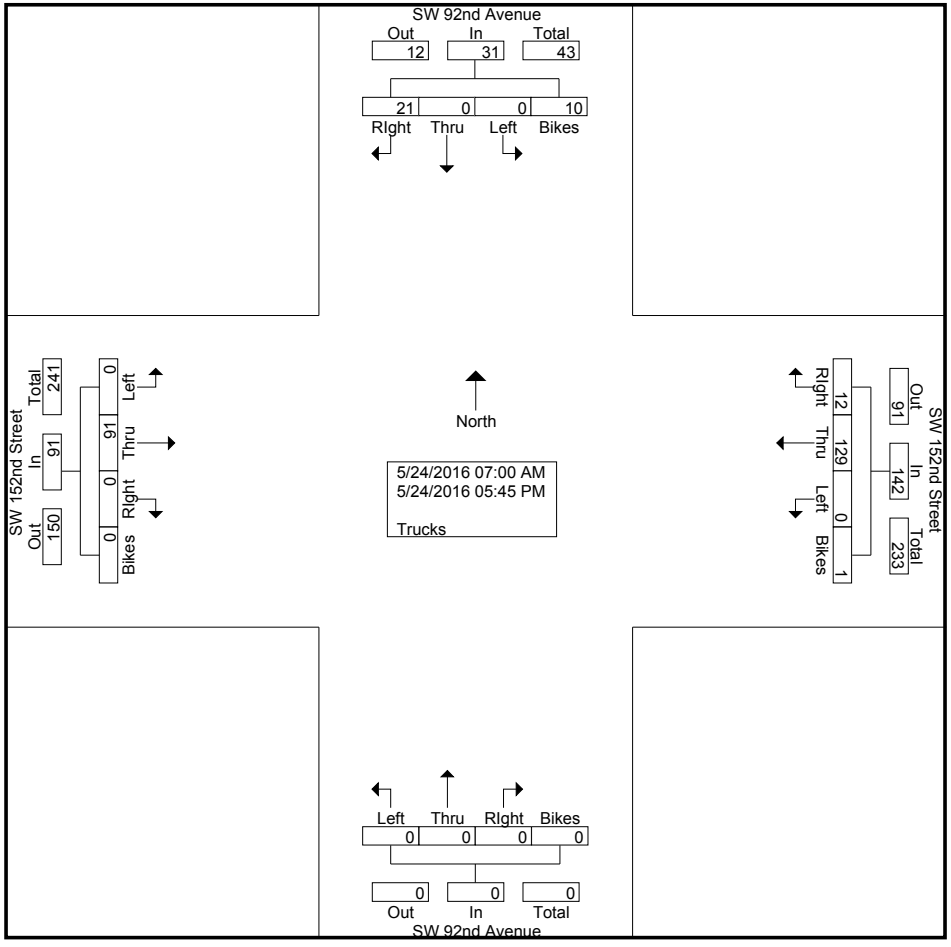

SW 152nd Street & SW 92nd Avenue

File Name : SW 152nd Street & SW 92nd Avenue
Site Code : 00000000
Start Date : 5/24/2016
Page No : 3

	SW 92nd Avenue Southbound					SW 92nd Avenue Northbound					SW 152nd Street Westbound					SW 152nd Street Eastbound					
Start Time	Left	Thru	RIght	Bikes	App. Total	Left	Thru	RIght	Bikes	App. Total	Left	Thru	RIght	Bikes	App. Total	Left	Thru	RIght	Bikes	App. Total	Int. Total
Peak Hour Analysis From 07:00 AM to 08:45 AM - Peak 1 of 1																					
Peak Hour for Entire Intersection Begins at 08:00 AM																					
08:00 AM	0	0	0	0	0	0	0	0	0	0	0	**10**	**1**	0	**11**	0	5	0	0	5	16
08:15 AM	0	0	**1**	0	1	0	0	0	0	0	0	9	1	0	10	0	3	0	0	3	14
08:30 AM	0	0	0	**3**	**3**	0	0	0	0	0	0	4	0	0	4	0	5	0	0	5	12
08:45 AM	0	0	1	1	2	0	0	0	0	0	0	5	1	0	6	0	**9**	0	0	**9**	**17**
Total Volume	0	0	2	4	6	0	0	0	0	0	0	28	3	0	31	0	22	0	0	22	59
% App. Total	0	0	33.3	66.7		0	0	0	0		0	90.3	9.7	0		0	100	0	0		
PHF	.000	.000	.500	.333	.500	.000	.000	.000	.000	.000	.000	.700	.750	.000	.705	.000	.611	.000	.000	.611	.868

SW 152nd Street & SW 92nd Avenue

File Name : SW 152nd Street & SW 92nd Avenue
Site Code : 00000000
Start Date : 5/24/2016
Page No : 4

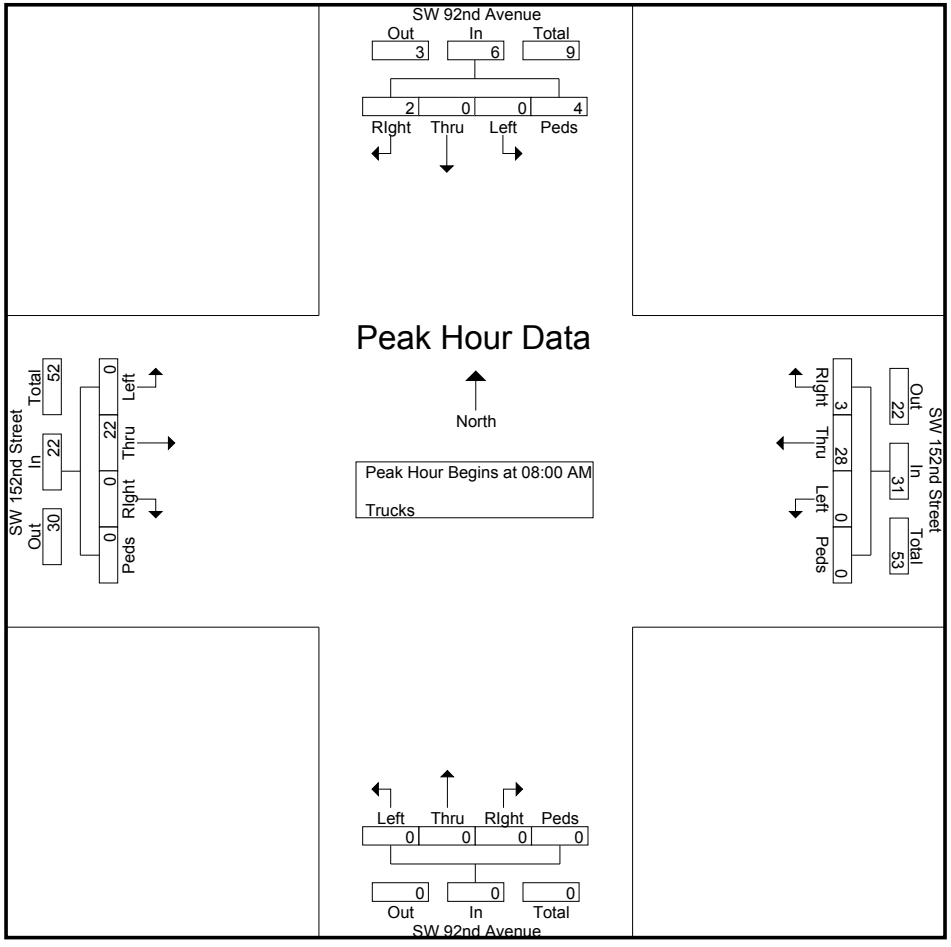

SW 152nd Street & SW 92nd Avenue

File Name : SW 152nd Street & SW 92nd Avenue
Site Code : 00000000
Start Date : 5/24/2016
Page No : 5

	SW 92nd Avenue Southbound					SW 92nd Avenue Northbound					SW 152nd Street Westbound					SW 152nd Street Eastbound					
Start Time	Left	Thru	RIght	Bikes	App. Total	Left	Thru	RIght	Bikes	App. Total	Left	Thru	RIght	Bikes	App. Total	Left	Thru	RIght	Bikes	App. Total	Int. Total
Peak Hour Analysis From 11:00 AM to 12:45 PM - Peak 1 of 1																					
Peak Hour for Entire Intersection Begins at 11:00 AM																					
11:00 AM	0	0	**1**	**1**	**2**	0	0	0	0	0	0	6	1	0	7	0	5	0	0	5	14
11:15 AM	0	0	1	0	1	0	0	0	0	0	0	**9**	0	0	**9**	0	**9**	0	0	**9**	**19**
11:30 AM	0	0	1	0	1	0	0	0	0	0	0	5	**3**	0	8	0	6	0	0	6	15
11:45 AM	0	0	1	0	1	0	0	0	0	0	0	7	0	0	7	0	1	0	0	1	9
Total Volume	0	0	4	1	5	0	0	0	0	0	0	27	4	0	31	0	21	0	0	21	57
% App. Total	0	0	80	20		0	0	0	0		0	87.1	12.9	0		0	100	0	0		
PHF	.000	.000	1.00	.250	.625	.000	.000	.000	.000	.000	.000	.750	.333	.000	.861	.000	.583	.000	.000	.583	.750

SW 152nd Street & SW 92nd Avenue

File Name : SW 152nd Street & SW 92nd Avenue
Site Code : 00000000
Start Date : 5/24/2016
Page No : 6

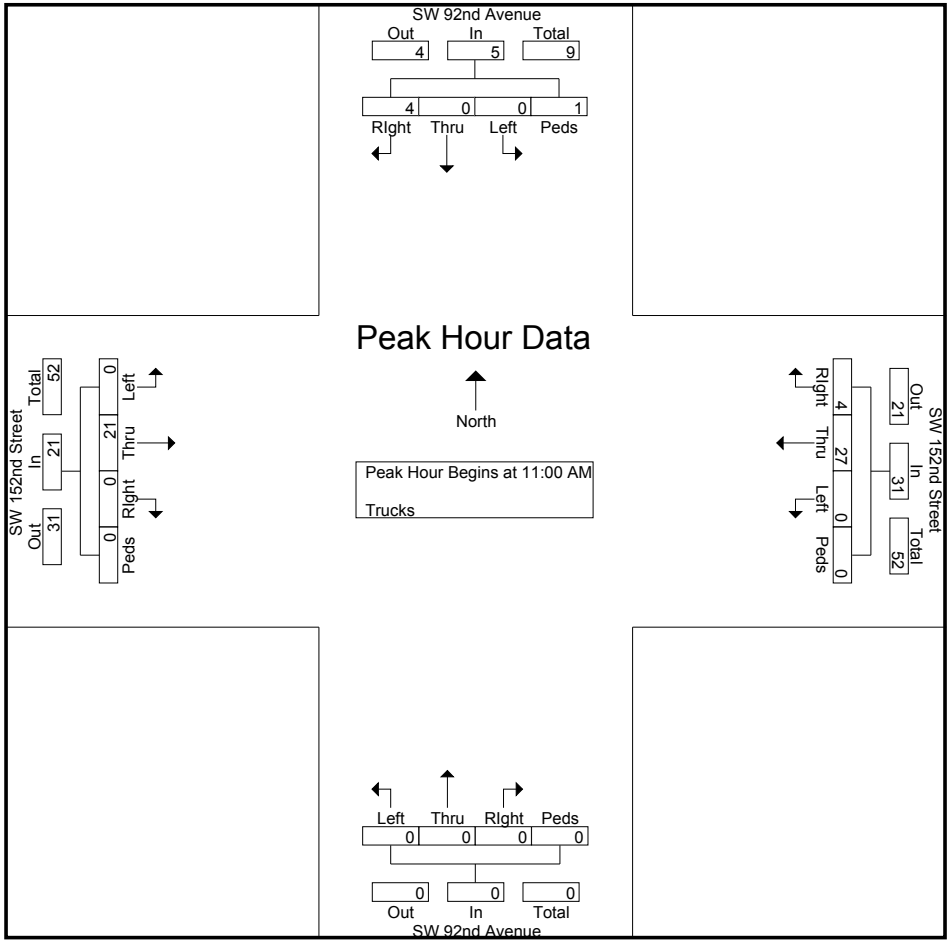

SW 152nd Street & SW 92nd Avenue

File Name : SW 152nd Street & SW 92nd Avenue
Site Code : 00000000
Start Date : 5/24/2016
Page No : 7

	SW 92nd Avenue Southbound					SW 92nd Avenue Northbound					SW 152nd Street Westbound					SW 152nd Street Eastbound					
Start Time	Left	Thru	RIght	Bikes	App. Total	Left	Thru	RIght	Bikes	App. Total	Left	Thru	RIght	Bikes	App. Total	Left	Thru	RIght	Bikes	App. Total	Int. Total
Peak Hour Analysis From 04:00 PM to 05:45 PM - Peak 1 of 1																					
Peak Hour for Entire Intersection Begins at 04:00 PM																					
04:00 PM	0	0	1	**1**	2	0	0	0	0	0	0	**5**	0	0	**5**	0	**6**	0	0	**6**	**13**
04:15 PM	0	0	2	0	2	0	0	0	0	0	0	3	0	0	3	0	0	0	0	0	5
04:30 PM	0	0	1	0	1	0	0	0	0	0	0	4	**1**	0	5	0	1	0	0	1	7
04:45 PM	0	0	**3**	0	**3**	0	0	0	0	0	0	4	0	0	4	0	1	0	0	1	8
Total Volume	0	0	7	1	8	0	0	0	0	0	0	16	1	0	17	0	8	0	0	8	33
% App. Total	0	0	87.5	12.5		0	0	0	0		0	94.1	5.9	0		0	100	0	0		
PHF	.000	.000	.583	.250	.667	.000	.000	.000	.000	.000	.000	.800	.250	.000	.850	.000	.333	.000	.000	.333	.635

SW 152nd Street & SW 92nd Avenue

File Name : SW 152nd Street & SW 92nd Avenue
Site Code : 00000000
Start Date : 5/24/2016
Page No : 8

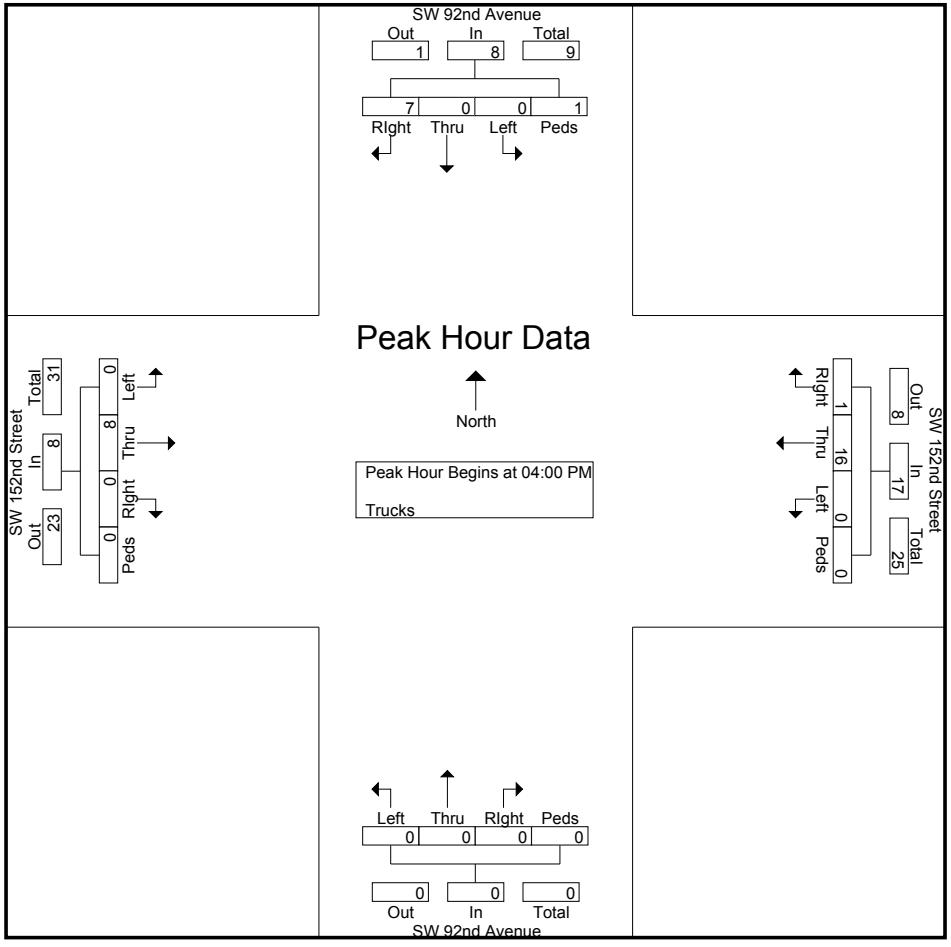

SW 152nd Street & SW 92nd Avenue

File Name : SW 152nd Street & SW 92nd Avenue
Site Code : 00000000
Start Date : 5/24/2016
Page No : 1

Groups Printed- Veh - Trucks - Turns

	SW 92nd Avenue Southbound					SW 92nd Avenue Northbound					SW 152nd Street Westbound					SW 152nd Street Eastbound					
Start Time	Left	Thru	RIght	Peds/Bike	App. Total	Left	Thru	RIght	Peds/Bike	App. Total	Left	Thru	RIght	Peds/Bike	App. Total	Left	Thru	RIght	Peds/Bike	App. Total	Int. Total
07:00 AM	0	0	66	0	66	0	0	0	0	0	0	179	56	1	236	0	241	0	0	241	543
07:15 AM	0	0	34	2	36	0	0	0	0	0	0	95	62	0	157	0	260	0	0	260	453
07:30 AM	0	0	30	3	33	0	0	0	0	0	0	112	81	0	193	0	242	0	0	242	468
07:45 AM	0	0	25	2	27	0	0	0	0	0	0	115	82	0	197	0	252	0	0	252	476
Total	0	0	155	7	162	0	0	0	0	0	0	501	281	1	783	0	995	0	0	995	1940
08:00 AM	0	0	26	1	27	0	0	0	0	0	0	149	85	0	234	0	277	0	0	277	538
08:15 AM	0	0	28	2	30	0	0	0	0	0	0	146	48	0	194	0	273	0	0	273	497
08:30 AM	0	0	42	5	47	0	0	0	0	0	0	132	57	0	189	0	244	0	0	244	480
08:45 AM	0	0	35	1	36	0	0	0	0	0	0	141	46	0	187	0	286	0	0	286	509
Total	0	0	131	9	140	0	0	0	0	0	0	568	236	0	804	0	1080	0	0	1080	2024
*** BREAK ***																					
11:00 AM	0	0	44	1	45	0	0	0	0	0	0	177	17	0	194	0	204	0	0	204	443
11:15 AM	0	0	41	1	42	0	0	0	0	0	0	180	24	0	204	0	209	0	0	209	455
11:30 AM	0	0	33	2	35	0	0	0	0	0	0	168	33	0	201	0	198	0	0	198	434
11:45 AM	0	0	46	2	48	0	0	0	0	0	0	160	23	0	183	0	173	0	0	173	404
Total	0	0	164	6	170	0	0	0	0	0	0	685	97	0	782	0	784	0	0	784	1736
12:00 PM	0	0	53	3	56	0	0	0	0	0	0	173	18	0	191	0	210	0	0	210	457
12:15 PM	0	0	49	2	51	0	0	0	0	0	0	198	21	0	219	0	187	0	0	187	457
12:30 PM	0	0	55	0	55	0	0	0	0	0	0	191	30	0	221	0	218	0	0	218	494
12:45 PM	0	0	56	2	58	0	0	0	0	0	0	191	27	0	218	0	182	0	0	182	458
Total	0	0	213	7	220	0	0	0	0	0	0	753	96	0	849	0	797	0	0	797	1866
*** BREAK ***																					
04:00 PM	0	0	111	4	115	0	0	0	0	0	0	235	30	0	265	0	206	0	0	206	586
04:15 PM	0	0	112	0	112	0	0	0	0	0	0	203	19	0	222	0	201	0	0	201	535
04:30 PM	0	0	125	0	125	0	0	0	0	0	0	247	26	0	273	0	212	0	0	212	610
04:45 PM	0	0	134	2	136	0	0	0	0	0	0	212	24	0	236	0	154	0	0	154	526
Total	0	0	482	6	488	0	0	0	0	0	0	897	99	0	996	0	773	0	0	773	2257
05:00 PM	0	0	153	0	153	0	0	0	0	0	0	216	25	0	241	0	200	0	0	200	594
05:15 PM	0	0	138	3	141	0	0	0	0	0	0	212	24	0	236	0	194	0	0	194	571
05:30 PM	0	0	161	1	162	0	0	0	0	0	0	252	23	0	275	0	168	0	0	168	605
05:45 PM	0	0	179	3	182	0	0	0	0	0	0	209	21	0	230	0	169	0	0	169	581
Total	0	0	631	7	638	0	0	0	0	0	0	889	93	0	982	0	731	0	0	731	2351
Grand Total	0	0	1776	42	1818	0	0	0	0	0	0	4293	902	1	5196	0	5160	0	0	5160	12174
Apprch %	0	0	97.7	2.3		0	0	0	0		0	82.6	17.4	0		0	100	0	0		
Total %	0	0	14.6	0.3	14.9	0	0	0	0	0	0	35.3	7.4	0	42.7	0	42.4	0	0	42.4	
Veh	0	0	1755	32	1787	0	0	0	0	0	0	4164	890	0	5054	0	5069	0	0	5069	11910
% Veh	0	0	98.8	76.2	98.3	0	0	0	0	0	0	97	98.7	0	97.3	0	98.2	0	0	98.2	97.8

SW 152nd Street & SW 92nd Avenue

File Name : SW 152nd Street & SW 92nd Avenue
Site Code : 00000000
Start Date : 5/24/2016
Page No : 2

Groups Printed- Veh - Trucks - Turns

	SW 92nd Avenue Southbound					SW 92nd Avenue Northbound					SW 152nd Street Westbound					SW 152nd Street Eastbound					
	Left	Thru	RIght	Peds/Bike	App. Total	Left	Thru	RIght	Peds/Bike	App. Total	Left	Thru	RIght	Peds/Bike	App. Total	Left	Thru	RIght	Peds/Bike	App. Total	Int. Total
Trucks	0	0	21	10	31	0	0	0	0	0	0	129	12	1	142	0	91	0	0	91	264
% Trucks	0	0	1.2	23.8	1.7	0	0	0	0	0	0	3	1.3	100	2.7	0	1.8	0	0	1.8	2.2
U-Turns	0	0	0	0	0	0	0	0	0	0	0	0	0	0	0	0	0	0	0	0	0
% U-Turns	0	0	0	0	0	0	0	0	0	0	0	0	0	0	0	0	0	0	0	0	0

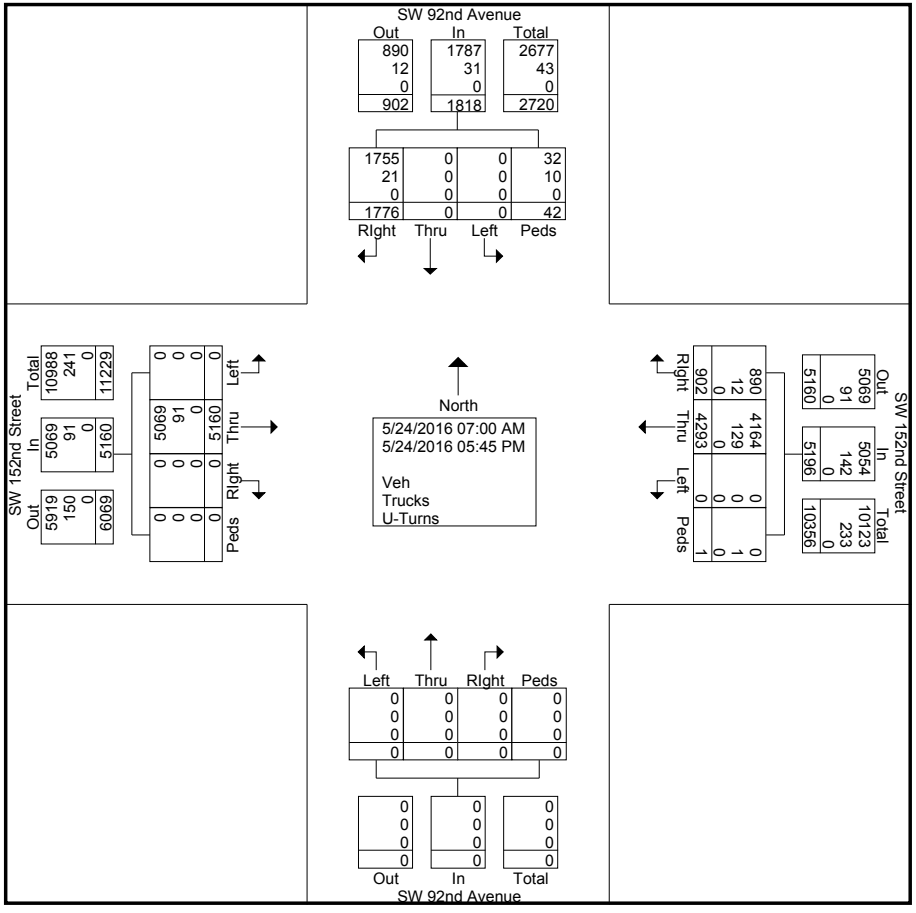

SW 152nd Street & SW 92nd Avenue

File Name : SW 152nd Street & SW 92nd Avenue
Site Code : 00000000
Start Date : 5/24/2016
Page No : 3

	SW 92nd Avenue Southbound					SW 92nd Avenue Northbound					SW 152nd Street Westbound					SW 152nd Street Eastbound					
Start Time	Left	Thru	RIght	Peds/Bike	App. Total	Left	Thru	RIght	Peds/Bike	App. Total	Left	Thru	RIght	Peds/Bike	App. Total	Left	Thru	RIght	Peds/Bike	App. Total	Int. Total
Peak Hour Analysis From 07:00 AM to 08:45 AM - Peak 1 of 1																					
Peak Hour for Entire Intersection Begins at 08:00 AM																					
08:00 AM	0	0	26	1	27	0	0	0	0	0	0	**149**	**85**	0	**234**	0	277	0	0	277	**538**
08:15 AM	0	0	28	2	30	0	0	0	0	0	0	146	48	0	194	0	273	0	0	273	497
08:30 AM	0	0	**42**	**5**	**47**	0	0	0	0	0	0	132	57	0	189	0	244	0	0	244	480
08:45 AM	0	0	35	1	36	0	0	0	0	0	0	141	46	0	187	0	**286**	0	0	**286**	509
Total Volume	0	0	131	9	140	0	0	0	0	0	0	568	236	0	804	0	1080	0	0	1080	2024
% App. Total	0	0	93.6	6.4		0	0	0	0		0	70.6	29.4	0		0	100	0	0		
PHF	.000	.000	.780	.450	.745	.000	.000	.000	.000	.000	.000	.953	.694	.000	.859	.000	.944	.000	.000	.944	.941

SW 152nd Street & SW 92nd Avenue

File Name : SW 152nd Street & SW 92nd Avenue
Site Code : 00000000
Start Date : 5/24/2016
Page No : 4

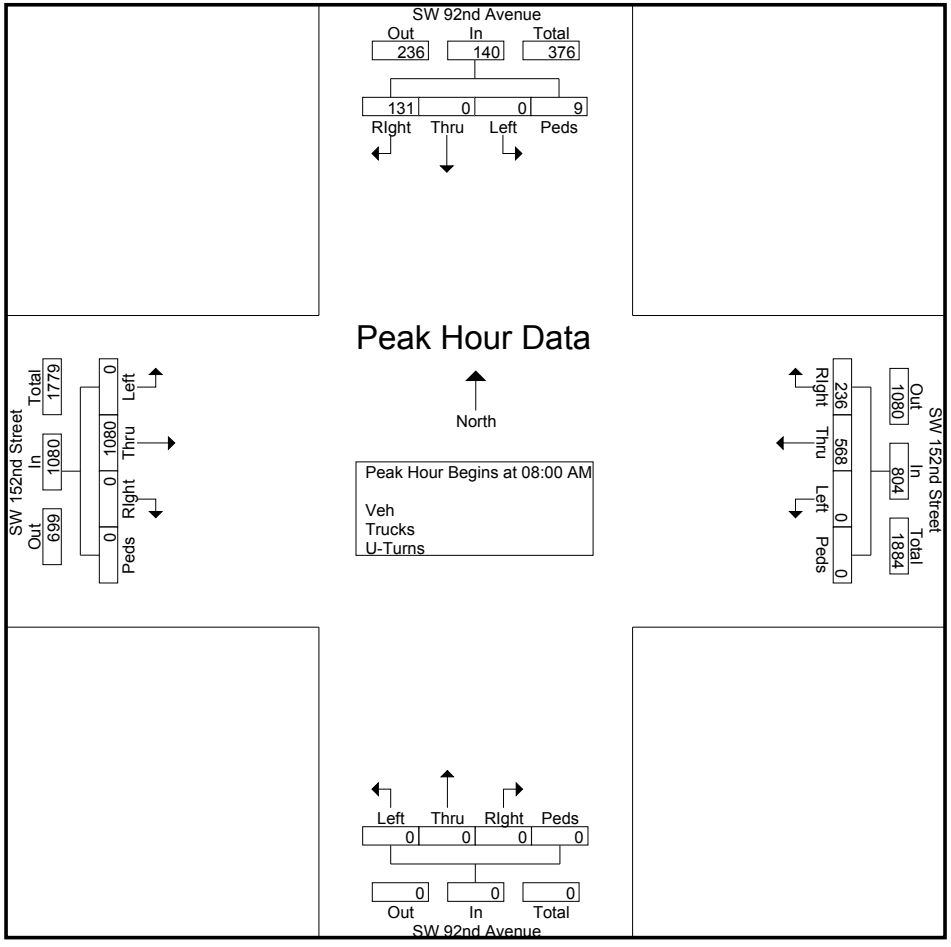

SW 152nd Street & SW 92nd Avenue

File Name : SW 152nd Street & SW 92nd Avenue
Site Code : 00000000
Start Date : 5/24/2016
Page No : 5

	SW 92nd Avenue Southbound					SW 92nd Avenue Northbound					SW 152nd Street Westbound					SW 152nd Street Eastbound					
Start Time	Left	Thru	RIght	Peds/Bike	App. Total	Left	Thru	RIght	Peds/Bike	App. Total	Left	Thru	RIght	Peds/Bike	App. Total	Left	Thru	RIght	Peds/Bike	App. Total	Int. Total
Peak Hour Analysis From 11:00 AM to 12:45 PM - Peak 1 of 1																					
Peak Hour for Entire Intersection Begins at 12:00 PM																					
12:00 PM	0	0	53	**3**	56	0	0	0	0	0	0	173	18	0	191	0	210	0	0	210	457
12:15 PM	0	0	49	2	51	0	0	0	0	0	0	**198**	21	0	219	0	187	0	0	187	457
12:30 PM	0	0	55	0	55	0	0	0	0	0	0	191	**30**	0	**221**	0	**218**	0	0	**218**	**494**
12:45 PM	0	0	**56**	2	**58**	0	0	0	0	0	0	191	27	0	218	0	182	0	0	182	458
Total Volume	0	0	213	7	220	0	0	0	0	0	0	753	96	0	849	0	797	0	0	797	1866
% App. Total	0	0	96.8	3.2		0	0	0	0		0	88.7	11.3	0		0	100	0	0		
PHF	.000	.000	.951	.583	.948	.000	.000	.000	.000	.000	.000	.951	.800	.000	.960	.000	.914	.000	.000	.914	.944

SW 152nd Street & SW 92nd Avenue

File Name : SW 152nd Street & SW 92nd Avenue
Site Code : 00000000
Start Date : 5/24/2016
Page No : 6

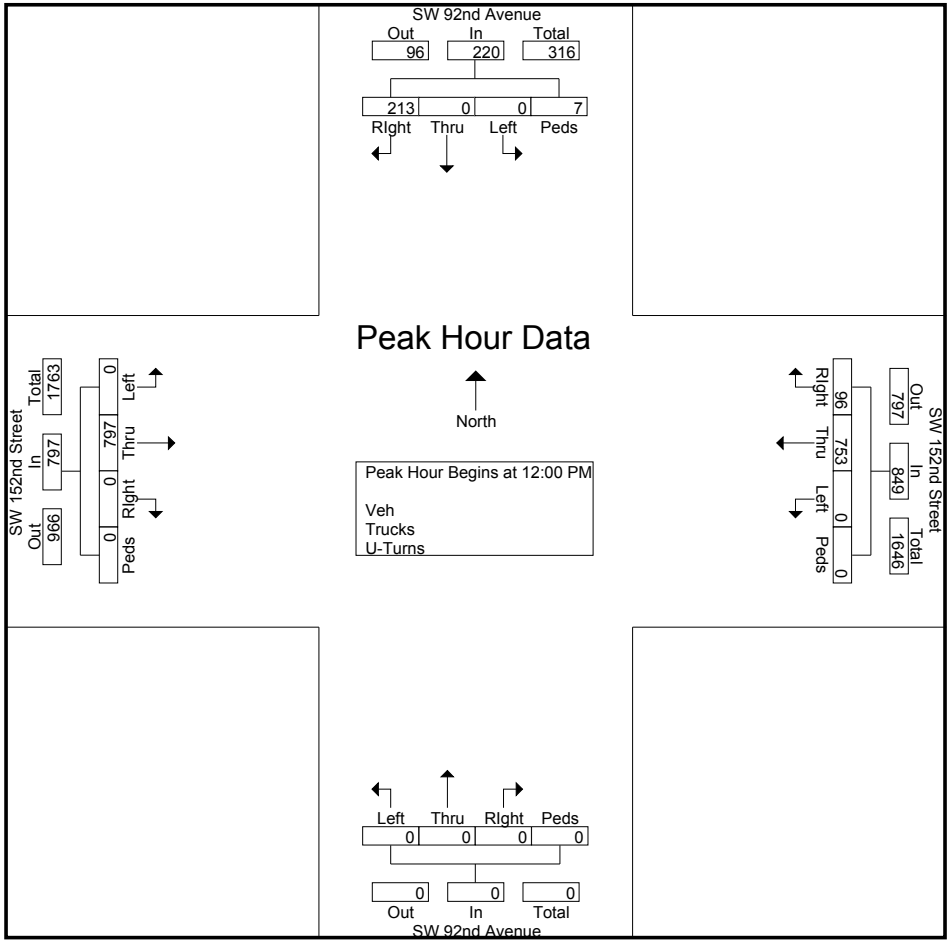

SW 152nd Street & SW 92nd Avenue

File Name : SW 152nd Street & SW 92nd Avenue
Site Code : 00000000
Start Date : 5/24/2016
Page No : 7

	SW 92nd Avenue Southbound					SW 92nd Avenue Northbound					SW 152nd Street Westbound					SW 152nd Street Eastbound					
Start Time	Left	Thru	RIght	Peds/Bike	App. Total	Left	Thru	RIght	Peds/Bike	App. Total	Left	Thru	RIght	Peds/Bike	App. Total	Left	Thru	RIght	Peds/Bike	App. Total	Int. Total
Peak Hour Analysis From 04:00 PM to 05:45 PM - Peak 1 of 1																					
Peak Hour for Entire Intersection Begins at 05:00 PM																					
05:00 PM	0	0	153	0	153	0	0	0	0	0	0	216	**25**	0	241	0	**200**	0	0	**200**	594
05:15 PM	0	0	138	**3**	141	0	0	0	0	0	0	212	24	0	236	0	194	0	0	194	571
05:30 PM	0	0	161	1	162	0	0	0	0	0	0	**252**	23	0	**275**	0	168	0	0	168	**605**
05:45 PM	0	0	**179**	3	**182**	0	0	0	0	0	0	209	21	0	230	0	169	0	0	169	581
Total Volume	0	0	631	7	638	0	0	0	0	0	0	889	93	0	982	0	731	0	0	731	2351
% App. Total	0	0	98.9	1.1		0	0	0	0		0	90.5	9.5	0		0	100	0	0		
PHF	.000	.000	.881	.583	.876	.000	.000	.000	.000	.000	.000	.882	.930	.000	.893	.000	.914	.000	.000	.914	.971

SW 152nd Street & SW 92nd Avenue

File Name : SW 152nd Street & SW 92nd Avenue
Site Code : 00000000
Start Date : 5/24/2016
Page No : 8

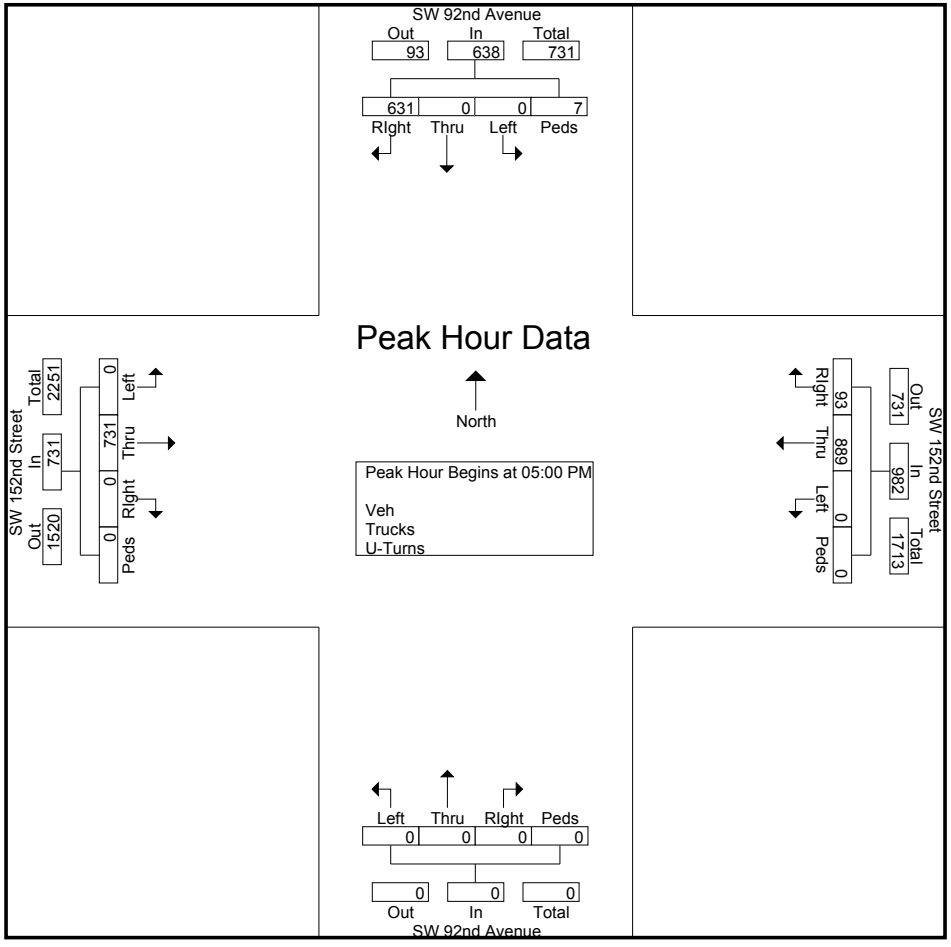

SW 152nd Street & SW 93rd Avenue

File Name : SW 152nd Street & SW 93rd Avenue
Site Code : 00000000
Start Date : 5/24/2016
Page No : 1

Groups Printed- Trucks

	SW 93rd Avenue Southbound					SW 93rd Avenue Northbound					SW 152nd Street Westbound					SW 152nd Street Eastbound					
Start Time	Left	Thru	RIght	Bikes	App. Total	Left	Thru	RIght	Bikes	App. Total	Left	Thru	RIght	Bikes	App. Total	Left	Thru	RIght	Bikes	App. Total	Int. Total
07:00 AM	0	0	0	0	0	0	0	0	0	0	0	2	0	0	2	1	4	0	0	5	7
07:15 AM	0	0	0	0	0	0	0	0	1	1	0	6	0	2	8	0	7	0	0	7	16
07:30 AM	0	0	0	0	0	0	0	0	2	2	0	4	0	0	4	2	8	0	0	10	16
07:45 AM	0	0	0	0	0	0	0	0	0	0	0	2	0	0	2	4	7	0	0	11	13
Total	0	0	0	0	0	0	0	0	3	3	0	14	0	2	16	7	26	0	0	33	52
08:00 AM	0	0	0	0	0	0	0	0	1	1	0	9	1	0	10	1	9	0	0	10	21
08:15 AM	0	0	0	0	0	0	0	0	2	2	0	8	0	0	8	5	5	0	0	10	20
08:30 AM	0	0	0	0	0	0	0	0	0	0	0	4	0	0	4	2	8	0	0	10	14
08:45 AM	0	0	0	0	0	0	0	0	1	1	0	5	0	0	5	3	9	0	0	12	18
Total	0	0	0	0	0	0	0	0	4	4	0	26	1	0	27	11	31	0	0	42	73
*** BREAK ***																					
11:00 AM	0	0	0	1	1	0	0	0	0	0	0	9	0	0	9	0	4	0	0	4	14
11:15 AM	0	0	2	0	2	0	0	0	0	0	0	10	0	0	10	1	12	0	0	13	25
11:30 AM	1	0	1	0	2	0	0	0	0	0	0	8	1	0	9	0	7	0	0	7	18
11:45 AM	0	0	3	0	3	0	0	0	1	1	0	6	1	0	7	1	2	0	0	3	14
Total	1	0	6	1	8	0	0	0	1	1	0	33	2	0	35	2	25	0	0	27	71
12:00 PM	0	0	3	0	3	0	0	0	1	1	1	8	0	0	9	0	3	0	0	3	16
12:15 PM	0	0	1	0	1	0	0	0	2	2	0	14	0	0	14	0	6	0	0	6	23
12:30 PM	0	0	1	0	1	0	0	0	0	0	0	3	1	0	4	0	3	0	0	3	8
12:45 PM	0	0	3	0	3	1	0	0	0	1	1	7	0	0	8	8	3	0	0	11	23
Total	0	0	8	0	8	1	0	0	3	4	2	32	1	0	35	8	15	0	0	23	70
*** BREAK ***																					
04:00 PM	0	0	2	1	3	0	0	0	1	1	0	4	0	0	4	2	7	0	0	9	17
04:15 PM	0	0	2	0	2	0	0	0	0	0	0	3	0	0	3	1	2	0	0	3	8
04:30 PM	0	0	1	0	1	0	0	0	2	2	0	6	1	1	8	0	1	0	0	1	12
04:45 PM	0	0	2	0	2	0	0	0	0	0	0	8	0	0	8	2	1	0	0	3	13
Total	0	0	7	1	8	0	0	0	3	3	0	21	1	1	23	5	11	0	0	16	50
05:00 PM	1	0	1	1	3	0	0	0	1	1	0	5	0	0	5	1	5	0	0	6	15
05:15 PM	0	0	3	1	4	0	0	0	0	0	0	7	0	0	7	1	2	0	0	3	14
05:30 PM	0	0	0	0	0	0	0	0	0	0	0	5	1	0	6	0	2	0	0	2	8
05:45 PM	0	0	3	0	3	0	0	0	1	1	0	5	0	0	5	0	4	0	0	4	13
Total	1	0	7	2	10	0	0	0	2	2	0	22	1	0	23	2	13	0	0	15	50
Grand Total	2	0	28	4	34	1	0	0	16	17	2	148	6	3	159	35	121	0	0	156	366
Apprch %	5.9	0	82.4	11.8		5.9	0	0	94.1		1.3	93.1	3.8	1.9		22.4	77.6	0	0		
Total %	0.5	0	7.7	1.1	9.3	0.3	0	0	4.4	4.6	0.5	40.4	1.6	0.8	43.4	9.6	33.1	0	0	42.6	

SW 152nd Street & SW 93rd Avenue

File Name : SW 152nd Street & SW 93rd Avenue
Site Code : 00000000
Start Date : 5/24/2016
Page No : 2

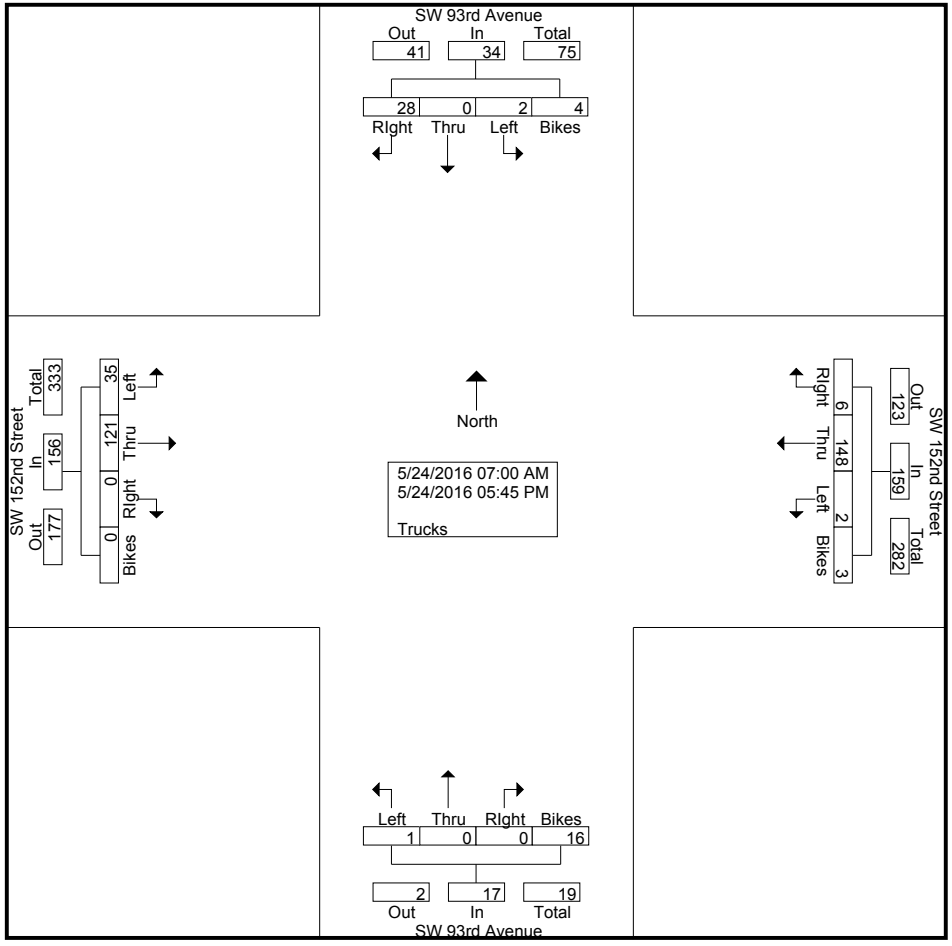

SW 152nd Street & SW 93rd Avenue

File Name : SW 152nd Street & SW 93rd Avenue
Site Code : 00000000
Start Date : 5/24/2016
Page No : 3

	SW 93rd Avenue Southbound					SW 93rd Avenue Northbound					SW 152nd Street Westbound					SW 152nd Street Eastbound					
Start Time	Left	Thru	RIght	Bikes	App. Total	Left	Thru	RIght	Bikes	App. Total	Left	Thru	RIght	Bikes	App. Total	Left	Thru	RIght	Bikes	App. Total	Int. Total
Peak Hour Analysis From 07:00 AM to 08:45 AM - Peak 1 of 1																					
Peak Hour for Entire Intersection Begins at 08:00 AM																					
08:00 AM	0	0	0	0	0	0	0	0	1	1	0	**9**	**1**	0	**10**	1	**9**	0	0	10	**21**
08:15 AM	0	0	0	0	0	0	0	0	**2**	**2**	0	8	0	0	8	**5**	5	0	0	10	20
08:30 AM	0	0	0	0	0	0	0	0	0	0	0	4	0	0	4	2	8	0	0	10	14
08:45 AM	0	0	0	0	0	0	0	0	1	1	0	5	0	0	5	3	9	0	0	**12**	18
Total Volume	0	0	0	0	0	0	0	0	4	4	0	26	1	0	27	11	31	0	0	42	73
% App. Total	0	0	0	0		0	0	0	100		0	96.3	3.7	0		26.2	73.8	0	0		
PHF	.000	.000	.000	.000	.000	.000	.000	.000	.500	.500	.000	.722	.250	.000	.675	.550	.861	.000	.000	.875	.869

SW 152nd Street & SW 93rd Avenue

File Name : SW 152nd Street & SW 93rd Avenue
Site Code : 00000000
Start Date : 5/24/2016
Page No : 4

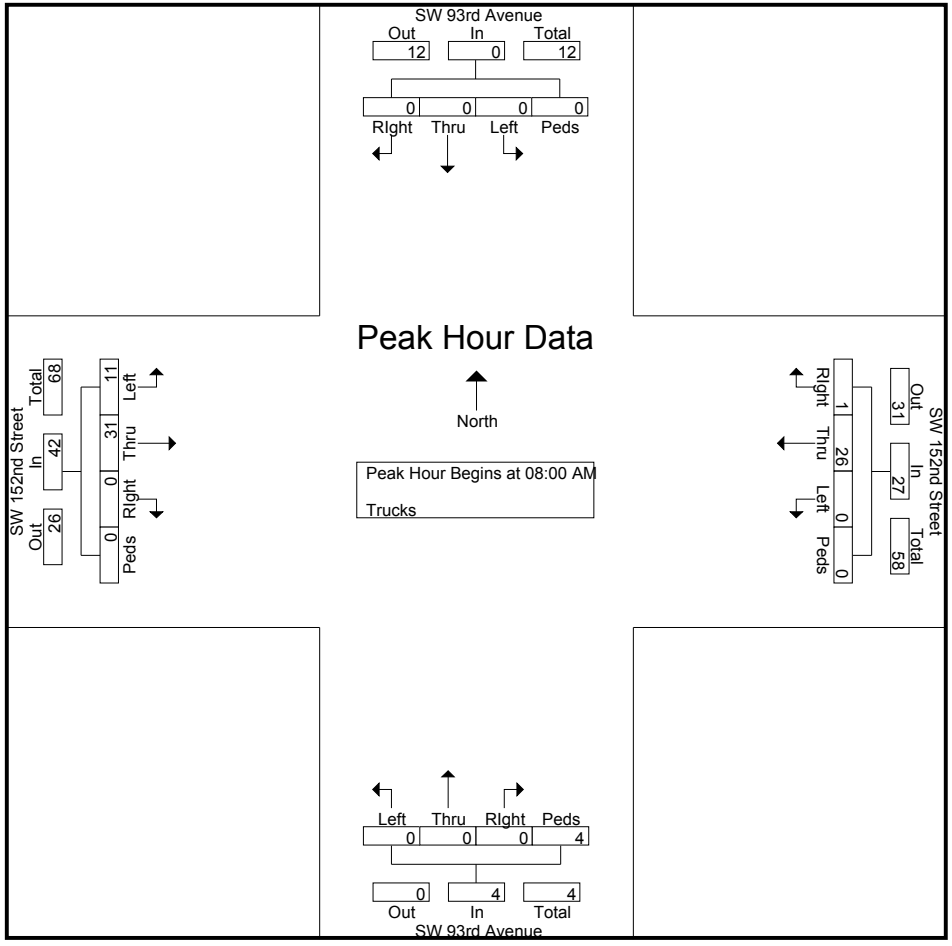

SW 152nd Street & SW 93rd Avenue

File Name : SW 152nd Street & SW 93rd Avenue
Site Code : 00000000
Start Date : 5/24/2016
Page No : 5

	SW 93rd Avenue Southbound					SW 93rd Avenue Northbound					SW 152nd Street Westbound					SW 152nd Street Eastbound					
Start Time	Left	Thru	RIght	Bikes	App. Total	Left	Thru	RIght	Bikes	App. Total	Left	Thru	RIght	Bikes	App. Total	Left	Thru	RIght	Bikes	App. Total	Int. Total
Peak Hour Analysis From 11:00 AM to 12:45 PM - Peak 1 of 1																					
Peak Hour for Entire Intersection Begins at 11:15 AM																					
11:15 AM	0	0	2	0	2	0	0	0	0	0	0	**10**	0	0	**10**	**1**	**12**	0	0	**13**	**25**
11:30 AM	**1**	0	1	0	2	0	0	0	0	0	0	8	**1**	0	9	0	7	0	0	7	18
11:45 AM	0	0	**3**	0	**3**	0	0	0	**1**	**1**	0	6	1	0	7	1	2	0	0	3	14
12:00 PM	0	0	3	0	3	0	0	0	1	1	**1**	8	0	0	9	0	3	0	0	3	16
Total Volume	1	0	9	0	10	0	0	0	2	2	1	32	2	0	35	2	24	0	0	26	73
% App. Total	10	0	90	0		0	0	0	100		2.9	91.4	5.7	0		7.7	92.3	0	0		
PHF	.250	.000	.750	.000	.833	.000	.000	.000	.500	.500	.250	.800	.500	.000	.875	.500	.500	.000	.000	.500	.730

SW 152nd Street & SW 93rd Avenue

File Name : SW 152nd Street & SW 93rd Avenue
Site Code : 00000000
Start Date : 5/24/2016
Page No : 6

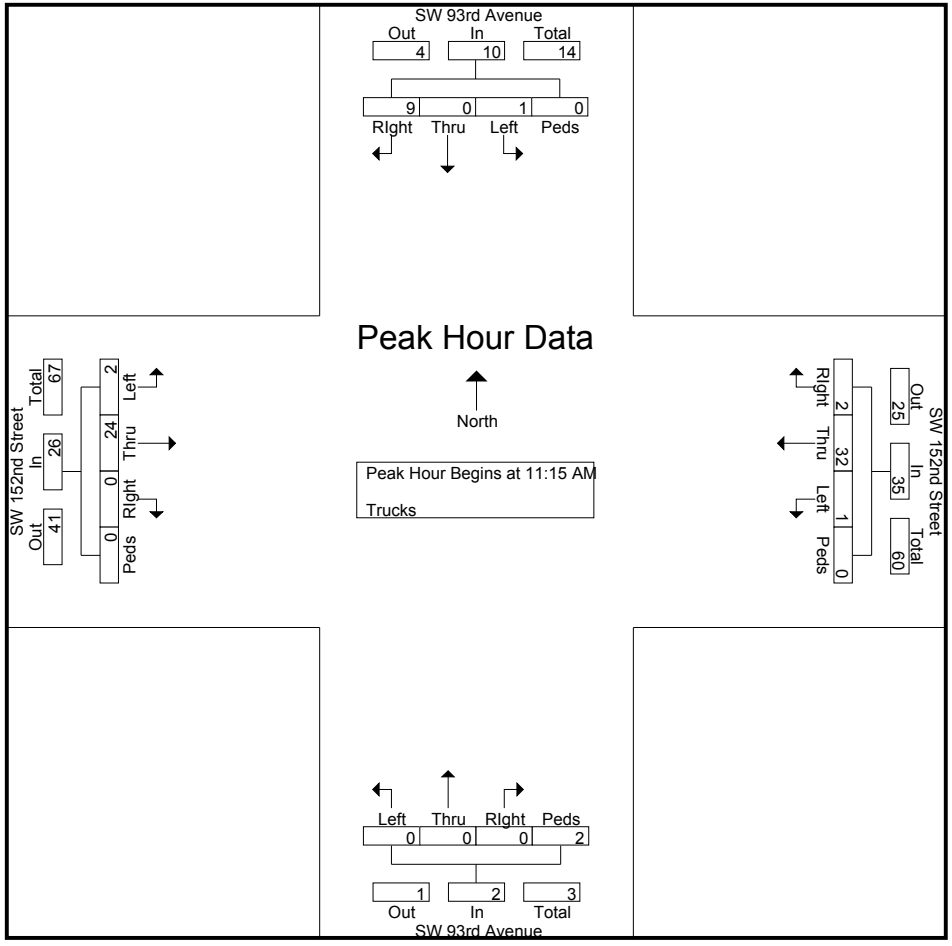

SW 152nd Street & SW 93rd Avenue

File Name : SW 152nd Street & SW 93rd Avenue
Site Code : 00000000
Start Date : 5/24/2016
Page No : 7

	SW 93rd Avenue Southbound					SW 93rd Avenue Northbound					SW 152nd Street Westbound					SW 152nd Street Eastbound					
Start Time	Left	Thru	RIght	Bikes	App. Total	Left	Thru	RIght	Bikes	App. Total	Left	Thru	RIght	Bikes	App. Total	Left	Thru	RIght	Bikes	App. Total	Int. Total
Peak Hour Analysis From 04:00 PM to 05:45 PM - Peak 1 of 1																					
Peak Hour for Entire Intersection Begins at 04:30 PM																					
04:30 PM	0	0	1	0	1	0	0	0	**2**	**2**	0	6	**1**	**1**	**8**	0	1	0	0	1	12
04:45 PM	0	0	2	0	2	0	0	0	0	0	0	**8**	0	0	8	**2**	1	0	0	3	13
05:00 PM	**1**	0	1	**1**	3	0	0	0	1	1	0	5	0	0	5	1	**5**	0	0	**6**	**15**
05:15 PM	0	0	**3**	1	**4**	0	0	0	0	0	0	7	0	0	7	1	2	0	0	3	14
Total Volume	1	0	7	2	10	0	0	0	3	3	0	26	1	1	28	4	9	0	0	13	54
% App. Total	10	0	70	20		0	0	0	100		0	92.9	3.6	3.6		30.8	69.2	0	0		
PHF	.250	.000	.583	.500	.625	.000	.000	.000	.375	.375	.000	.813	.250	.250	.875	.500	.450	.000	.000	.542	.900

SW 152nd Street & SW 93rd Avenue

File Name : SW 152nd Street & SW 93rd Avenue
Site Code : 00000000
Start Date : 5/24/2016
Page No : 8

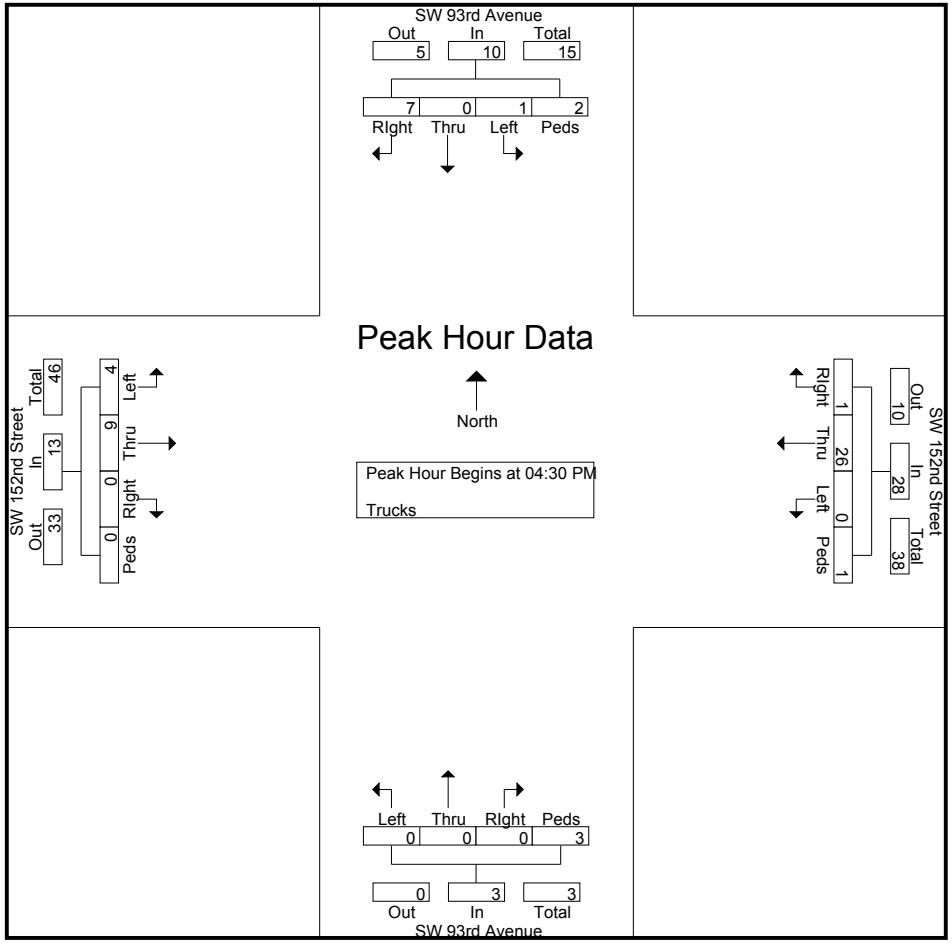

SW 152nd Street & SW 93rd Avenue

File Name : SW 152nd Street & SW 93rd Avenue
Site Code : 00000000
Start Date : 5/24/2016
Page No : 1

Groups Printed- Turns

	SW 93rd Avenue Southbound					SW 93rd Avenue Northbound					SW 152nd Street Westbound					SW 152nd Street Eastbound					
Start Time	Left	Thru	RIght	Peds/Bike	App. Total	Left	Thru	RIght	Peds/Bike	App. Total	Left	Thru	RIght	Peds/Bike	App. Total	Left	Thru	RIght	Peds/Bike	App. Total	Int. Total
*** BREAK ***																					
08:15 AM	0	0	0	0	0	0	0	0	0	0	0	0	0	0	0	1	0	0	0	1	1
*** BREAK ***																					
Total	0	0	0	0	0	0	0	0	0	0	0	0	0	0	0	1	0	0	0	1	1
*** BREAK ***																					
11:15 AM	0	0	0	0	0	0	0	0	0	0	1	0	0	0	1	0	0	0	0	0	1
*** BREAK ***																					
Total	0	0	0	0	0	0	0	0	0	0	1	0	0	0	1	0	0	0	0	0	1
*** BREAK ***																					
04:30 PM	0	0	0	0	0	0	0	0	0	0	2	0	0	0	2	0	0	0	0	0	2
*** BREAK ***																					
Total	0	0	0	0	0	0	0	0	0	0	2	0	0	0	2	0	0	0	0	0	2
05:00 PM	0	0	0	0	0	0	0	0	0	0	1	0	0	0	1	0	0	0	0	0	1
*** BREAK ***																					
Total	0	0	0	0	0	0	0	0	0	0	1	0	0	0	1	0	0	0	0	0	1
Grand Total	0	0	0	0	0	0	0	0	0	0	4	0	0	0	4	1	0	0	0	1	5
Apprch %	0	0	0	0		0	0	0	0		100	0	0	0		100	0	0	0		
Total %	0	0	0	0	0	0	0	0	0	0	80	0	0	0	80	20	0	0	0	20	

SW 152nd Street & SW 93rd Avenue

File Name : SW 152nd Street & SW 93rd Avenue
Site Code : 00000000
Start Date : 5/24/2016
Page No : 2

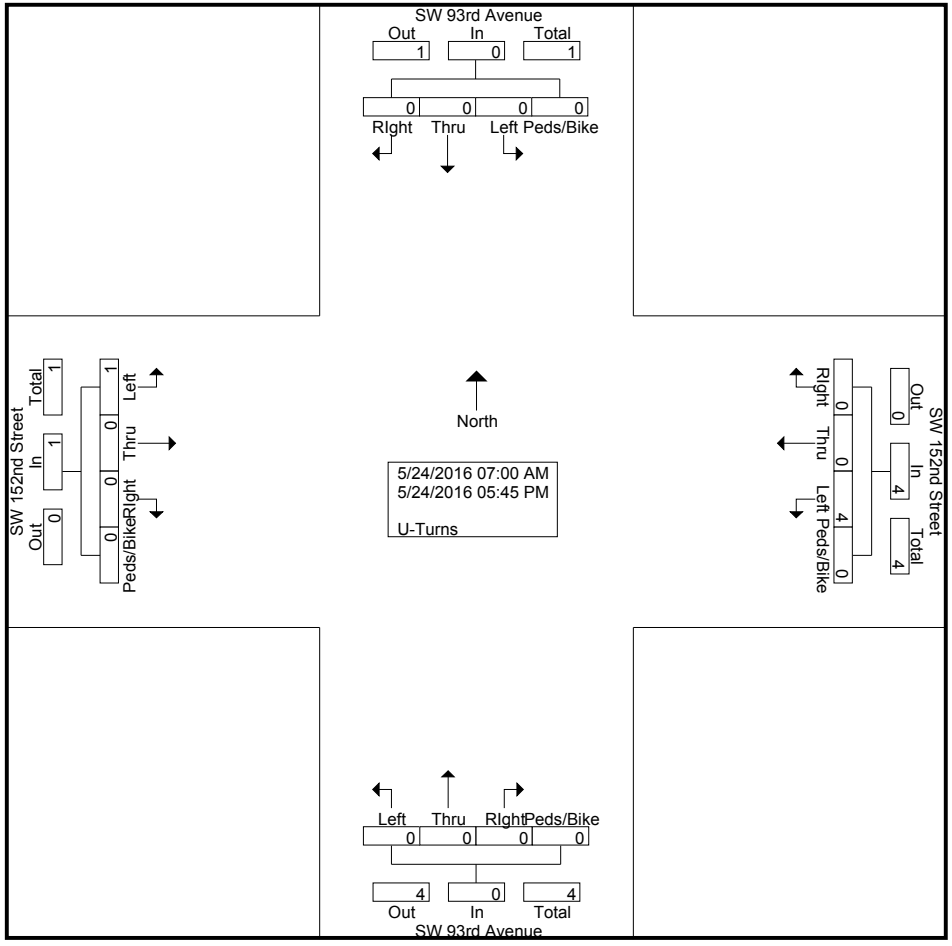

SW 152nd Street & SW 93rd Avenue

File Name : SW 152nd Street & SW 93rd Avenue
Site Code : 00000000
Start Date : 5/24/2016
Page No : 3

	SW 93rd Avenue Southbound					SW 93rd Avenue Northbound					SW 152nd Street Westbound					SW 152nd Street Eastbound					
Start Time	Left	Thru	RIght	Peds/Bike	App. Total	Left	Thru	RIght	Peds/Bike	App. Total	Left	Thru	RIght	Peds/Bike	App. Total	Left	Thru	RIght	Peds/Bike	App. Total	Int. Total
Peak Hour Analysis From 07:00 AM to 08:45 AM - Peak 1 of 1																					
Peak Hour for Entire Intersection Begins at 07:30 AM																					
07:30 AM	0	0	0	0	0	0	0	0	0	0	0	0	0	0	0	0	0	0	0	0	0
07:45 AM	0	0	0	0	0	0	0	0	0	0	0	0	0	0	0	0	0	0	0	0	0
08:00 AM	0	0	0	0	0	0	0	0	0	0	0	0	0	0	0	0	0	0	0	0	0
08:15 AM	0	0	0	0	0	0	0	0	0	0	0	0	0	0	0	**1**	0	0	0	**1**	**1**
Total Volume	0	0	0	0	0	0	0	0	0	0	0	0	0	0	0	1	0	0	0	1	1
% App. Total	0	0	0	0		0	0	0	0		0	0	0	0		100	0	0	0		
PHF	.000	.000	.000	.000	.000	.000	.000	.000	.000	.000	.000	.000	.000	.000	.000	.250	.000	.000	.000	.250	.250

SW 152nd Street & SW 93rd Avenue

File Name : SW 152nd Street & SW 93rd Avenue
Site Code : 00000000
Start Date : 5/24/2016
Page No : 4

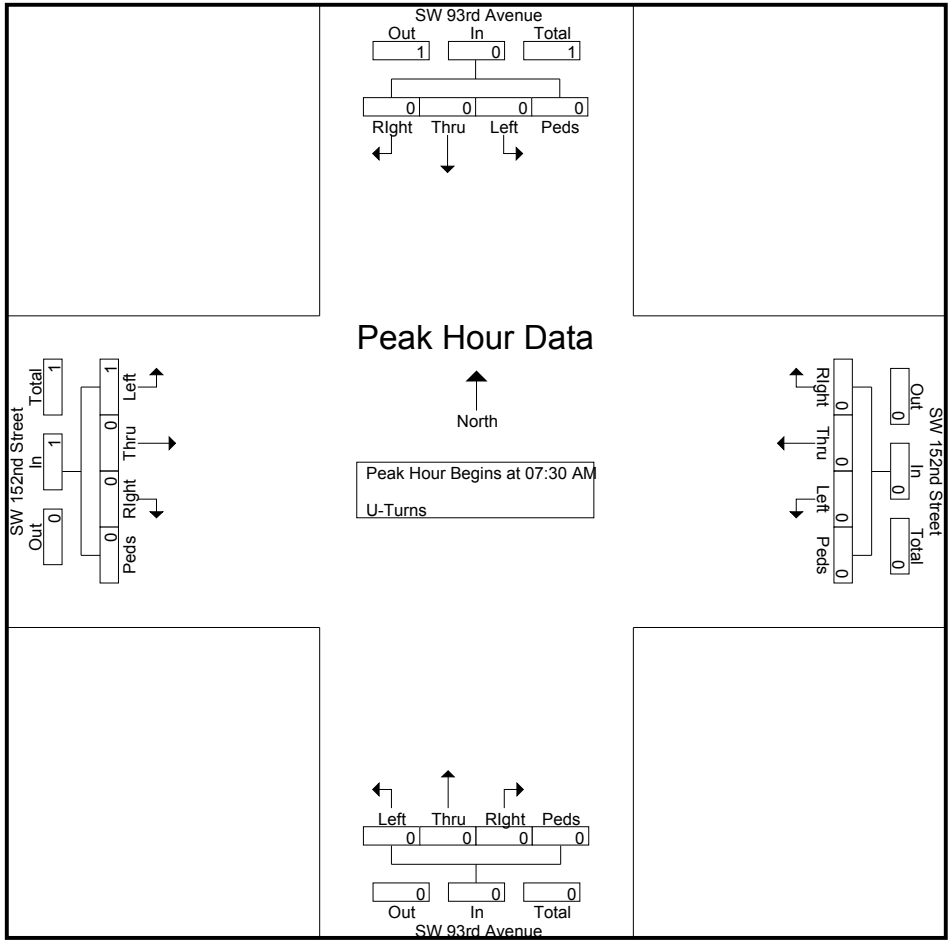

SW 152nd Street & SW 93rd Avenue

File Name : SW 152nd Street & SW 93rd Avenue
Site Code : 00000000
Start Date : 5/24/2016
Page No : 5

	SW 93rd Avenue Southbound					SW 93rd Avenue Northbound					SW 152nd Street Westbound					SW 152nd Street Eastbound					
Start Time	Left	Thru	RIght	Peds/Bike	App. Total	Left	Thru	RIght	Peds/Bike	App. Total	Left	Thru	RIght	Peds/Bike	App. Total	Left	Thru	RIght	Peds/Bike	App. Total	Int. Total
Peak Hour Analysis From 11:00 AM to 12:45 PM - Peak 1 of 1																					
Peak Hour for Entire Intersection Begins at 11:00 AM																					
11:00 AM	0	0	0	0	0	0	0	0	0	0	0	0	0	0	0	0	0	0	0	0	0
11:15 AM	0	0	0	0	0	0	0	0	0	0	**1**	0	0	0	**1**	0	0	0	0	0	**1**
11:30 AM	0	0	0	0	0	0	0	0	0	0	0	0	0	0	0	0	0	0	0	0	0
11:45 AM	0	0	0	0	0	0	0	0	0	0	0	0	0	0	0	0	0	0	0	0	0
Total Volume	0	0	0	0	0	0	0	0	0	0	1	0	0	0	1	0	0	0	0	0	1
% App. Total	0	0	0	0		0	0	0	0		100	0	0	0		0	0	0	0		
PHF	.000	.000	.000	.000	.000	.000	.000	.000	.000	.000	.250	.000	.000	.000	.250	.000	.000	.000	.000	.000	.250

SW 152nd Street & SW 93rd Avenue

File Name : SW 152nd Street & SW 93rd Avenue
Site Code : 00000000
Start Date : 5/24/2016
Page No : 6

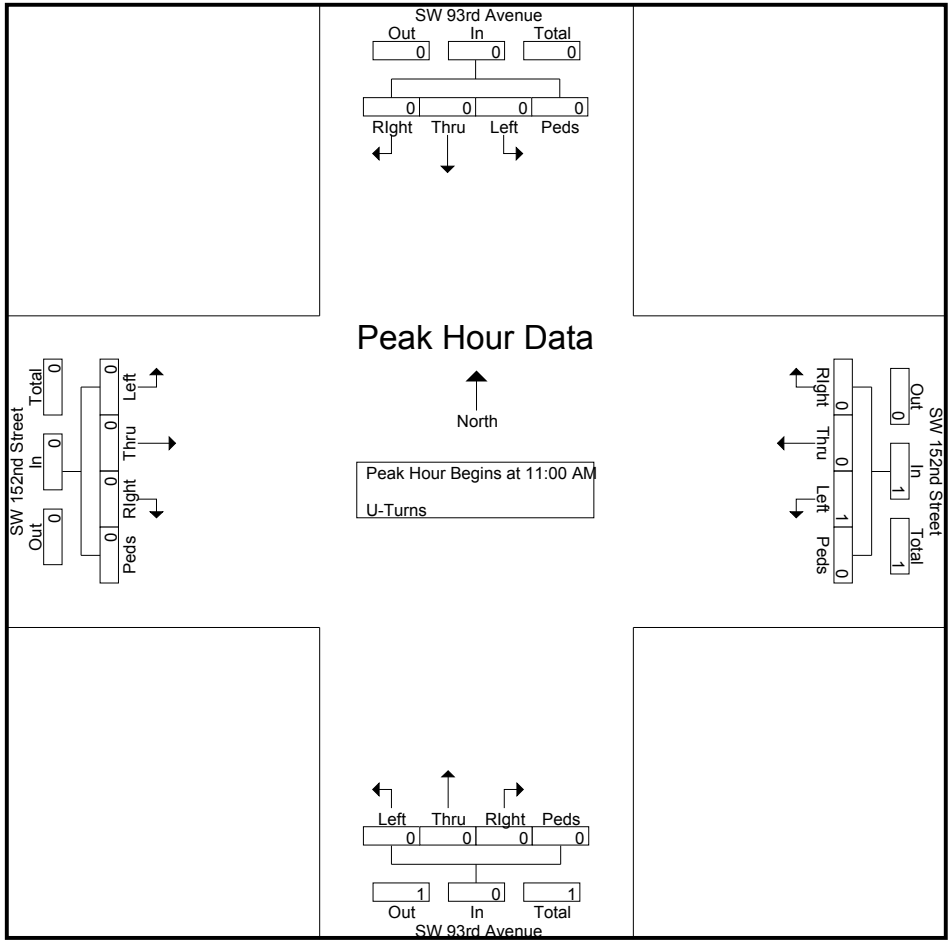

SW 152nd Street & SW 93rd Avenue

File Name : SW 152nd Street & SW 93rd Avenue
Site Code : 00000000
Start Date : 5/24/2016
Page No : 7

	SW 93rd Avenue Southbound					SW 93rd Avenue Northbound					SW 152nd Street Westbound					SW 152nd Street Eastbound					
Start Time	Left	Thru	RIght	Peds/Bike	App. Total	Left	Thru	RIght	Peds/Bike	App. Total	Left	Thru	RIght	Peds/Bike	App. Total	Left	Thru	RIght	Peds/Bike	App. Total	Int. Total
Peak Hour Analysis From 04:00 PM to 05:45 PM - Peak 1 of 1																					
Peak Hour for Entire Intersection Begins at 04:15 PM																					
04:15 PM	0	0	0	0	0	0	0	0	0	0	0	0	0	0	0	0	0	0	0	0	0
04:30 PM	0	0	0	0	0	0	0	0	0	0	**2**	0	0	0	**2**	0	0	0	0	0	**2**
04:45 PM	0	0	0	0	0	0	0	0	0	0	0	0	0	0	0	0	0	0	0	0	0
05:00 PM	0	0	0	0	0	0	0	0	0	0	1	0	0	0	1	0	0	0	0	0	1
Total Volume	0	0	0	0	0	0	0	0	0	0	3	0	0	0	3	0	0	0	0	0	3
% App. Total	0	0	0	0		0	0	0	0		100	0	0	0		0	0	0	0		
PHF	.000	.000	.000	.000	.000	.000	.000	.000	.000	.000	.375	.000	.000	.000	.375	.000	.000	.000	.000	.000	.375

SW 152nd Street & SW 93rd Avenue

File Name : SW 152nd Street & SW 93rd Avenue
Site Code : 00000000
Start Date : 5/24/2016
Page No : 8

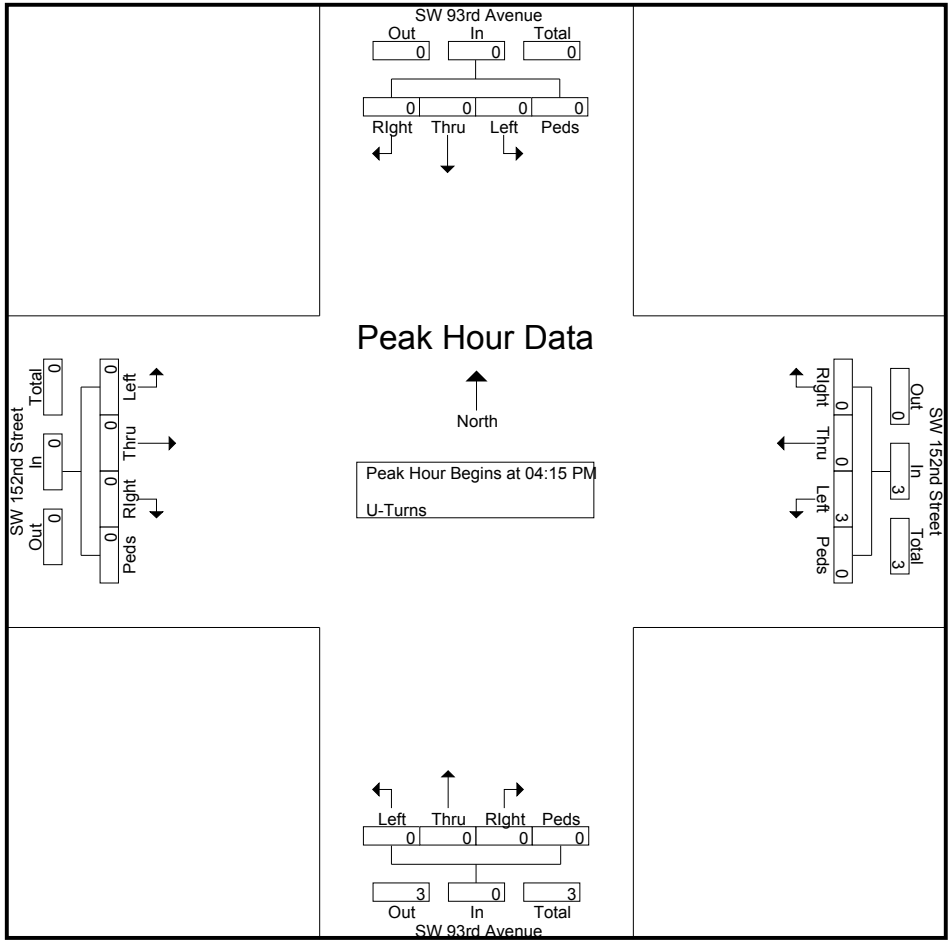

SW 152nd Street & SW 93rd Avenue

File Name : SW 152nd Street & SW 93rd Avenue
Site Code : 00000000
Start Date : 5/24/2016
Page No : 1

Groups Printed- Veh - Trucks - Turns

	SW 93rd Avenue Southbound					SW 93rd Avenue Northbound					SW 152nd Street Westbound					SW 152nd Street Eastbound					
Start Time	Left	Thru	RIght	Peds/Bike	App. Total	Left	Thru	RIght	Peds/Bike	App. Total	Left	Thru	RIght	Peds/Bike	App. Total	Left	Thru	RIght	Peds/Bike	App. Total	Int. Total
07:00 AM	2	0	66	1	69	1	0	1	4	6	3	253	10	1	267	154	243	23	0	420	762
07:15 AM	5	1	27	0	33	2	0	0	2	4	2	123	4	2	131	182	245	21	0	448	616
07:30 AM	15	2	27	0	44	1	1	0	2	4	1	119	11	1	132	129	257	22	0	408	588
07:45 AM	8	0	18	0	26	1	3	1	0	5	4	129	12	1	146	113	229	20	0	362	539
Total	30	3	138	1	172	5	4	2	8	19	10	624	37	5	676	578	974	86	0	1638	2505
08:00 AM	6	2	22	0	30	2	3	0	3	8	2	161	13	0	176	138	259	16	0	413	627
08:15 AM	18	0	15	0	33	2	0	2	4	8	2	143	17	0	162	121	241	10	0	372	575
08:30 AM	12	0	18	0	30	3	1	2	0	6	3	149	15	0	167	117	251	8	0	376	579
08:45 AM	16	1	15	0	32	1	0	2	3	6	1	166	23	0	190	141	266	7	0	414	642
Total	52	3	70	0	125	8	4	6	10	28	8	619	68	0	695	517	1017	41	0	1575	2423
*** BREAK ***																					
11:00 AM	21	1	22	2	46	6	0	3	1	10	2	206	15	1	224	52	173	7	0	232	512
11:15 AM	20	1	23	1	45	2	0	4	0	6	2	192	11	0	205	78	205	3	0	286	542
11:30 AM	18	0	20	0	38	5	0	2	1	8	3	192	18	1	214	63	164	4	0	231	491
11:45 AM	16	1	36	1	54	4	1	3	1	9	3	190	17	3	213	62	161	3	0	226	502
Total	75	3	101	4	183	17	1	12	3	33	10	780	61	5	856	255	703	17	0	975	2047
12:00 PM	23	1	37	5	66	1	0	4	1	6	4	205	13	0	222	57	172	3	0	232	526
12:15 PM	10	2	18	2	32	3	1	6	4	14	3	217	20	0	240	73	160	2	0	235	521
12:30 PM	21	2	26	0	49	4	0	6	3	13	2	234	17	0	253	70	201	3	0	274	589
12:45 PM	19	0	30	0	49	2	1	1	0	4	4	227	14	1	246	70	148	3	0	221	520
Total	73	5	111	7	196	10	2	17	8	37	13	883	64	1	961	270	681	11	0	962	2156
*** BREAK ***																					
04:00 PM	28	0	69	1	98	10	0	1	3	14	5	324	11	0	340	70	182	3	0	255	707
04:15 PM	26	0	58	0	84	6	0	4	0	10	2	321	16	0	339	53	155	2	0	210	643
04:30 PM	26	3	47	0	76	12	2	4	2	20	7	351	16	1	375	72	164	1	0	237	708
04:45 PM	19	0	63	0	82	10	1	2	1	14	3	339	8	0	350	60	146	2	0	208	654
Total	99	3	237	1	340	38	3	11	6	58	17	1335	51	1	1404	255	647	8	0	910	2712
05:00 PM	37	0	94	3	134	8	0	2	1	11	4	357	12	0	373	65	160	2	0	227	745
05:15 PM	26	0	91	1	118	21	4	3	0	28	1	328	9	0	338	55	146	2	0	203	687
05:30 PM	28	2	83	3	116	8	1	2	2	13	3	416	7	1	427	47	124	3	0	174	730
05:45 PM	34	1	79	0	114	26	0	2	2	30	3	378	7	2	390	57	138	4	0	199	733
Total	125	3	347	7	482	63	5	9	5	82	11	1479	35	3	1528	224	568	11	0	803	2895
Grand Total	454	20	1004	20	1498	141	19	57	40	257	69	5720	316	15	6120	2099	4590	174	0	6863	14738
Apprch %	30.3	1.3	67	1.3		54.9	7.4	22.2	15.6		1.1	93.5	5.2	0.2		30.6	66.9	2.5	0		
Total %	3.1	0.1	6.8	0.1	10.2	1	0.1	0.4	0.3	1.7	0.5	38.8	2.1	0.1	41.5	14.2	31.1	1.2	0	46.6	
Veh	452	20	976	16	1464	140	19	57	24	240	63	5572	310	12	5957	2063	4469	174	0	6706	14367
% Veh	99.6	100	97.2	80	97.7	99.3	100	100	60	93.4	91.3	97.4	98.1	80	97.3	98.3	97.4	100	0	97.7	97.5
Trucks	2	0	28	4	34	1	0	0	16	17	2	148	6	3	159	35	121	0	0	156	366
% Trucks	0.4	0	2.8	20	2.3	0.7	0	0	40	6.6	2.9	2.6	1.9	20	2.6	1.7	2.6	0	0	2.3	2.5

SW 152nd Street & SW 93rd Avenue

File Name : SW 152nd Street & SW 93rd Avenue
Site Code : 00000000
Start Date : 5/24/2016
Page No : 2

Groups Printed- Veh - Trucks - Turns

	SW 93rd Avenue Southbound					SW 93rd Avenue Northbound					SW 152nd Street Westbound					SW 152nd Street Eastbound					
	Left	Thru	RIght	Peds/Bike	App. Total	Left	Thru	RIght	Peds/Bike	App. Total	Left	Thru	RIght	Peds/Bike	App. Total	Left	Thru	RIght	Peds/Bike	App. Total	Int. Total
U-Turns	0	0	0	0	0	0	0	0	0	0	4	0	0	0	4	1	0	0	0	1	5
% U-Turns	0	0	0	0	0	0	0	0	0	0	5.8	0	0	0	0.1	0	0	0	0	0	0

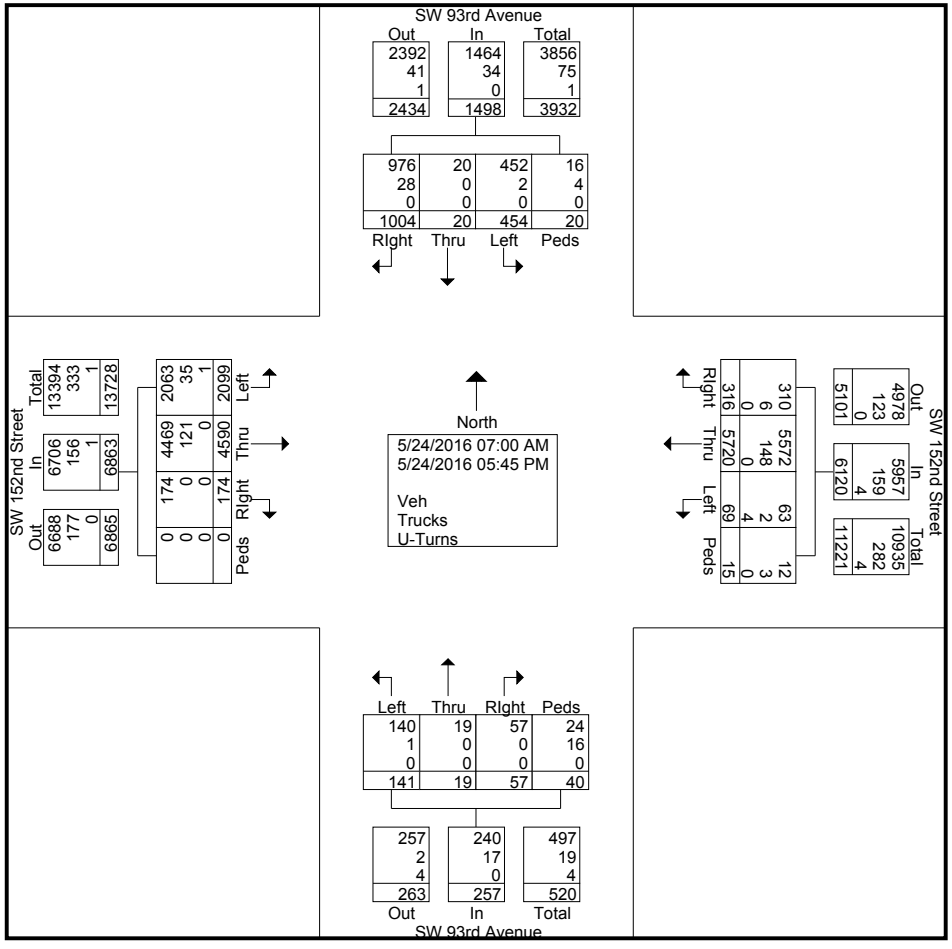

SW 152nd Street & SW 93rd Avenue

File Name : SW 152nd Street & SW 93rd Avenue
Site Code : 00000000
Start Date : 5/24/2016
Page No : 3

	SW 93rd Avenue Southbound					SW 93rd Avenue Northbound					SW 152nd Street Westbound					SW 152nd Street Eastbound					
Start Time	Left	Thru	RIght	Peds/Bike	App. Total	Left	Thru	RIght	Peds/Bike	App. Total	Left	Thru	RIght	Peds/Bike	App. Total	Left	Thru	RIght	Peds/Bike	App. Total	Int. Total
Peak Hour Analysis From 07:00 AM to 08:45 AM - Peak 1 of 1																					
Peak Hour for Entire Intersection Begins at 07:00 AM																					
07:00 AM	2	0	**66**	**1**	**69**	1	0	**1**	**4**	**6**	3	**253**	10	1	**267**	154	243	**23**	0	420	**762**
07:15 AM	5	1	27	0	33	**2**	0	0	2	4	2	123	4	**2**	131	**182**	245	21	0	**448**	616
07:30 AM	**15**	**2**	27	0	44	1	1	0	2	4	1	119	11	1	132	129	**257**	22	0	408	588
07:45 AM	8	0	18	0	26	1	**3**	1	0	5	**4**	129	**12**	1	146	113	229	20	0	362	539
Total Volume	30	3	138	1	172	5	4	2	8	19	10	624	37	5	676	578	974	86	0	1638	2505
% App. Total	17.4	1.7	80.2	0.6		26.3	21.1	10.5	42.1		1.5	92.3	5.5	0.7		35.3	59.5	5.3	0		
PHF	.500	.375	.523	.250	.623	.625	.333	.500	.500	.792	.625	.617	.771	.625	.633	.794	.947	.935	.000	.914	.822

SW 152nd Street & SW 93rd Avenue

File Name : SW 152nd Street & SW 93rd Avenue
Site Code : 00000000
Start Date : 5/24/2016
Page No : 4

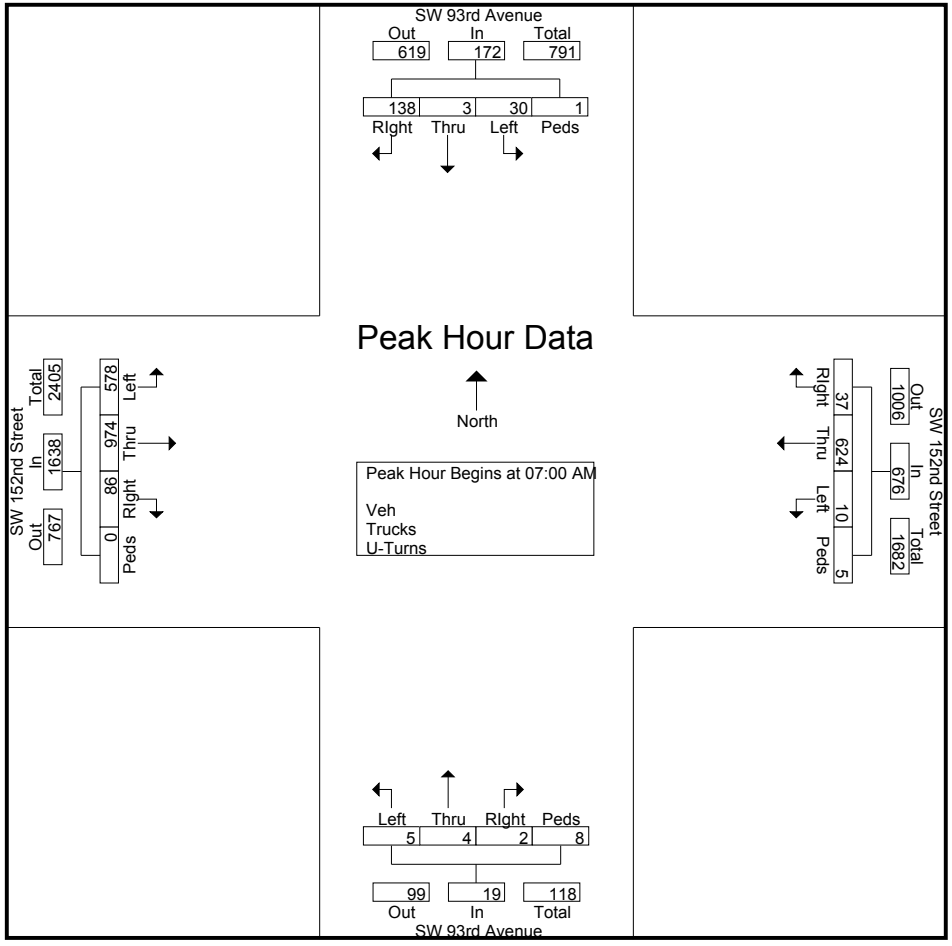

SW 152nd Street & SW 93rd Avenue

File Name : SW 152nd Street & SW 93rd Avenue
Site Code : 00000000
Start Date : 5/24/2016
Page No : 5

	SW 93rd Avenue Southbound					SW 93rd Avenue Northbound					SW 152nd Street Westbound					SW 152nd Street Eastbound					
Start Time	Left	Thru	RIght	Peds/Bike	App. Total	Left	Thru	RIght	Peds/Bike	App. Total	Left	Thru	RIght	Peds/Bike	App. Total	Left	Thru	RIght	Peds/Bike	App. Total	Int. Total
Peak Hour Analysis From 11:00 AM to 12:45 PM - Peak 1 of 1																					
Peak Hour for Entire Intersection Begins at 12:00 PM																					
12:00 PM	**23**	1	**37**	**5**	**66**	1	0	4	1	6	**4**	205	13	0	222	57	172	**3**	0	232	526
12:15 PM	10	**2**	18	2	32	3	**1**	**6**	**4**	**14**	3	217	**20**	0	240	**73**	160	2	0	235	521
12:30 PM	21	2	26	0	49	**4**	0	6	3	13	2	**234**	17	0	**253**	70	**201**	3	0	**274**	**589**
12:45 PM	19	0	30	0	49	2	1	1	0	4	4	227	14	**1**	246	70	148	3	0	221	520
Total Volume	73	5	111	7	196	10	2	17	8	37	13	883	64	1	961	270	681	11	0	962	2156
% App. Total	37.2	2.6	56.6	3.6		27	5.4	45.9	21.6		1.4	91.9	6.7	0.1		28.1	70.8	1.1	0		
PHF	.793	.625	.750	.350	.742	.625	.500	.708	.500	.661	.813	.943	.800	.250	.950	.925	.847	.917	.000	.878	.915

SW 152nd Street & SW 93rd Avenue

File Name : SW 152nd Street & SW 93rd Avenue
Site Code : 00000000
Start Date : 5/24/2016
Page No : 6

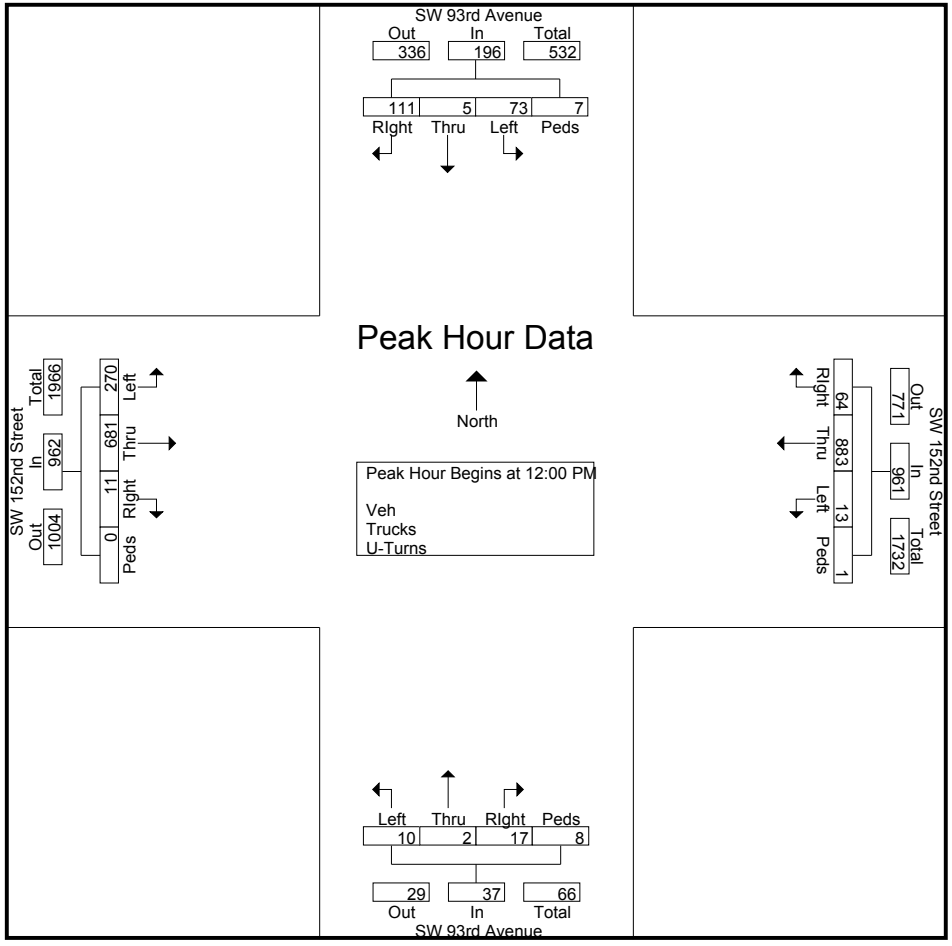

SW 152nd Street & SW 93rd Avenue

File Name : SW 152nd Street & SW 93rd Avenue
Site Code : 00000000
Start Date : 5/24/2016
Page No : 7

	SW 93rd Avenue Southbound					SW 93rd Avenue Northbound					SW 152nd Street Westbound					SW 152nd Street Eastbound					
Start Time	Left	Thru	RIght	Peds/Bike	App. Total	Left	Thru	RIght	Peds/Bike	App. Total	Left	Thru	RIght	Peds/Bike	App. Total	Left	Thru	RIght	Peds/Bike	App. Total	Int. Total
Peak Hour Analysis From 04:00 PM to 05:45 PM - Peak 1 of 1																					
Peak Hour for Entire Intersection Begins at 05:00 PM																					
05:00 PM	**37**	0	**94**	**3**	**134**	8	0	2	1	11	**4**	357	**12**	0	373	**65**	**160**	2	0	**227**	**745**
05:15 PM	26	0	91	1	118	21	**4**	**3**	0	28	1	328	9	0	338	55	146	2	0	203	687
05:30 PM	28	**2**	83	3	116	8	1	2	**2**	13	3	**416**	7	1	**427**	47	124	3	0	174	730
05:45 PM	34	1	79	0	114	**26**	0	2	2	**30**	3	378	7	**2**	390	57	138	**4**	0	199	733
Total Volume	125	3	347	7	482	63	5	9	5	82	11	1479	35	3	1528	224	568	11	0	803	2895
% App. Total	25.9	0.6	72	1.5		76.8	6.1	11	6.1		0.7	96.8	2.3	0.2		27.9	70.7	1.4	0		
PHF	.845	.375	.923	.583	.899	.606	.313	.750	.625	.683	.688	.889	.729	.375	.895	.862	.888	.688	.000	.884	.971

SW 152nd Street & SW 93rd Avenue

File Name : SW 152nd Street & SW 93rd Avenue
Site Code : 00000000
Start Date : 5/24/2016
Page No : 8

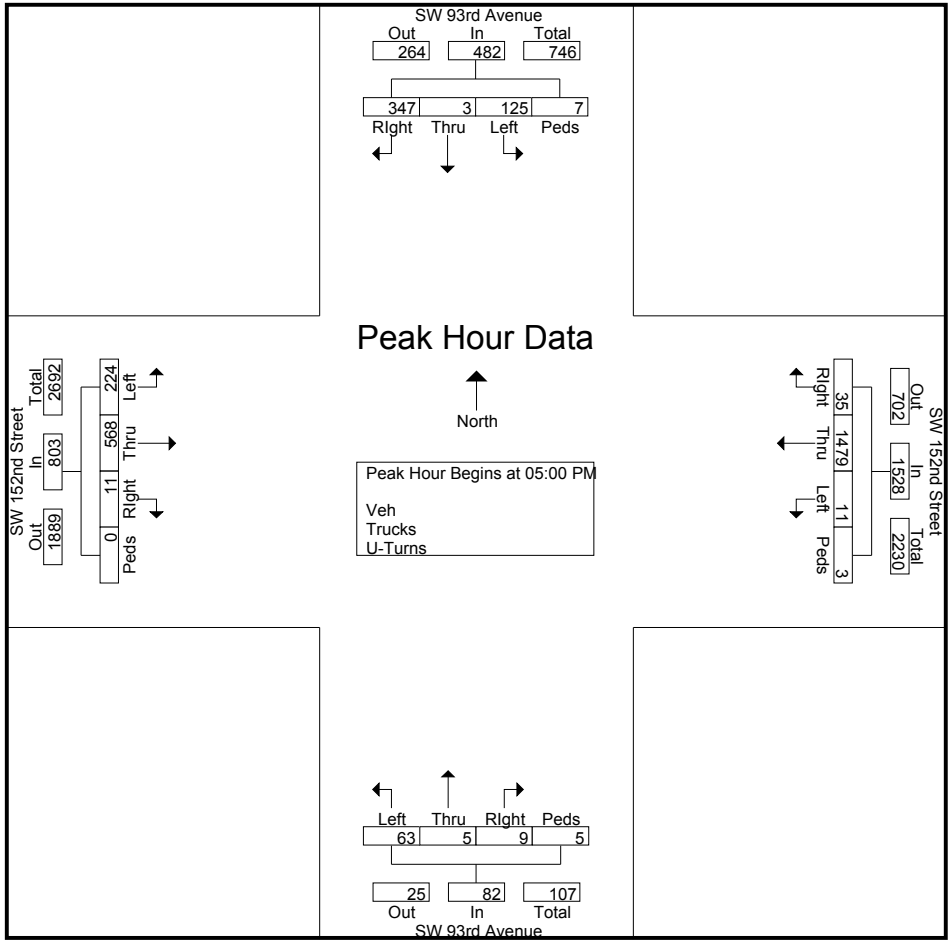

SW 152nd Street & SW 107th Avenue

File Name : SW 152nd Street & SW 107th Avenue
Site Code : 00000000
Start Date : 5/24/2016
Page No : 1

Groups Printed- Trucks

	SW 107th Avenue Southbound					SW 107th Avenue Northbound					SW 152nd Street Westbound					SW 152nd Street Eastbound					
Start Time	Left	Thru	RIght	Bikes	App. Total	Left	Thru	RIght	Bikes	App. Total	Left	Thru	RIght	Bikes	App. Total	Left	Thru	RIght	Bikes	App. Total	Int. Total
07:00 AM	0	0	0	0	0	0	0	0	0	0	0	4	2	0	6	0	2	0	0	2	8
07:15 AM	0	0	0	0	0	0	0	0	0	0	0	7	3	0	10	0	2	0	0	2	12
07:30 AM	1	0	1	0	2	0	0	0	0	0	0	8	0	0	8	0	4	0	0	4	14
07:45 AM	0	0	0	0	0	0	0	0	0	0	0	3	2	1	6	0	11	0	0	11	17
Total	1	0	1	0	2	0	0	0	0	0	0	22	7	1	30	0	19	0	0	19	51
08:00 AM	1	0	0	1	2	0	0	0	0	0	0	10	2	1	13	0	4	0	0	4	19
08:15 AM	0	0	0	2	2	0	0	0	0	0	0	7	0	1	8	1	9	0	0	10	20
08:30 AM	2	0	1	1	4	0	0	0	0	0	0	14	0	1	15	0	11	0	0	11	30
08:45 AM	0	0	1	0	1	0	0	0	0	0	0	8	1	0	9	0	10	0	0	10	20
Total	3	0	2	4	9	0	0	0	0	0	0	39	3	3	45	1	34	0	0	35	89
*** BREAK ***																					
11:00 AM	0	0	0	0	0	0	0	0	0	0	0	11	0	0	11	0	6	0	0	6	17
11:15 AM	0	0	0	0	0	0	0	0	0	0	0	17	2	0	19	0	15	0	0	15	34
11:30 AM	1	0	0	0	1	0	0	0	0	0	0	6	0	0	6	0	5	0	0	5	12
11:45 AM	0	0	0	0	0	0	0	0	0	0	0	9	1	0	10	0	4	0	0	4	14
Total	1	0	0	0	1	0	0	0	0	0	0	43	3	0	46	0	30	0	0	30	77
12:00 PM	0	0	1	0	1	0	0	0	0	0	0	7	1	1	9	1	5	0	0	6	16
12:15 PM	0	0	0	1	1	0	0	0	0	0	0	14	0	0	14	0	7	0	0	7	22
12:30 PM	1	0	0	1	2	0	0	0	0	0	0	3	0	1	4	0	6	0	0	6	12
12:45 PM	0	0	0	2	2	0	0	0	0	0	0	9	1	0	10	0	7	0	1	8	20
Total	1	0	1	4	6	0	0	0	0	0	0	33	2	2	37	1	25	0	1	27	70
*** BREAK ***																					
04:00 PM	2	0	1	0	3	0	0	0	0	0	0	16	0	1	17	0	5	0	0	5	25
04:15 PM	2	0	1	0	3	0	0	0	0	0	0	7	0	1	8	0	2	0	0	2	13
04:30 PM	2	0	0	0	2	0	0	0	0	0	0	7	3	0	10	0	1	0	0	1	13
04:45 PM	0	0	0	0	0	0	0	0	0	0	0	8	0	0	8	0	3	0	0	3	11
Total	6	0	2	0	8	0	0	0	0	0	0	38	3	2	43	0	11	0	0	11	62
05:00 PM	1	0	0	0	1	0	0	0	0	0	0	7	1	0	8	0	7	0	0	7	16
05:15 PM	0	0	0	0	0	0	0	0	0	0	0	3	1	0	4	0	2	0	0	2	6
05:30 PM	1	0	0	0	1	0	0	0	0	0	0	4	0	3	7	0	3	0	0	3	11
05:45 PM	0	0	0	0	0	0	0	0	0	0	0	5	1	0	6	0	3	0	0	3	9
Total	2	0	0	0	2	0	0	0	0	0	0	19	3	3	25	0	15	0	0	15	42
Grand Total	14	0	6	8	28	0	0	0	0	0	0	194	21	11	226	2	134	0	1	137	391
Apprch %	50	0	21.4	28.6		0	0	0	0		0	85.8	9.3	4.9		1.5	97.8	0	0.7		
Total %	3.6	0	1.5	2	7.2	0	0	0	0	0	0	49.6	5.4	2.8	57.8	0.5	34.3	0	0.3	35	

SW 152nd Street & SW 107th Avenue

File Name : SW 152nd Street & SW 107th Avenue
Site Code : 00000000
Start Date : 5/24/2016
Page No : 2

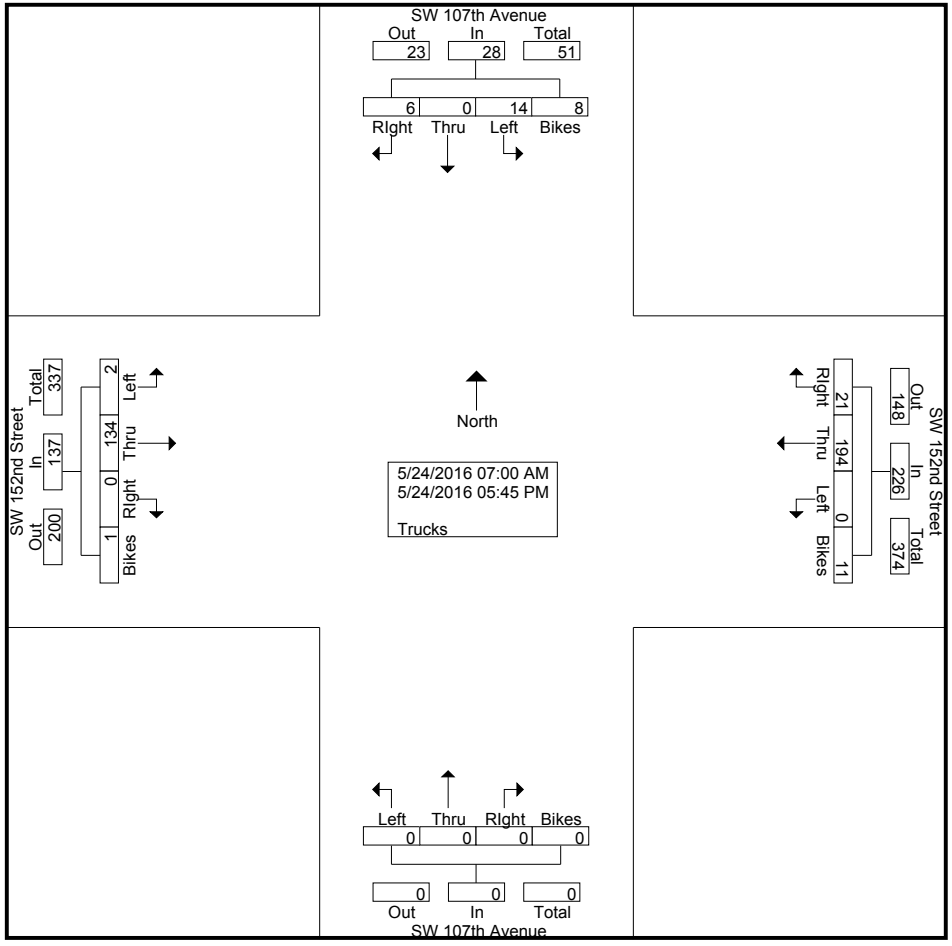

SW 152nd Street & SW 107th Avenue

File Name : SW 152nd Street & SW 107th Avenue
Site Code : 00000000
Start Date : 5/24/2016
Page No : 3

	SW 107th Avenue Southbound					SW 107th Avenue Northbound					SW 152nd Street Westbound					SW 152nd Street Eastbound					
Start Time	Left	Thru	Right	Bikes	App. Total	Left	Thru	Right	Bikes	App. Total	Left	Thru	Right	Bikes	App. Total	Left	Thru	Right	Bikes	App. Total	Int. Total
Peak Hour Analysis From 07:00 AM to 08:45 AM - Peak 1 of 1																					
Peak Hour for Entire Intersection Begins at 08:00 AM																					
08:00 AM	1	0	0	1	2	0	0	0	0	0	0	10	**2**	**1**	13	0	4	0	0	4	19
08:15 AM	0	0	0	**2**	2	0	0	0	0	0	0	7	0	1	8	**1**	9	0	0	10	20
08:30 AM	**2**	0	**1**	1	**4**	0	0	0	0	0	0	**14**	0	1	**15**	0	**11**	0	0	**11**	**30**
08:45 AM	0	0	1	0	1	0	0	0	0	0	0	8	1	0	9	0	10	0	0	10	20
Total Volume	3	0	2	4	9	0	0	0	0	0	0	39	3	3	45	1	34	0	0	35	89
% App. Total	33.3	0	22.2	44.4		0	0	0	0		0	86.7	6.7	6.7		2.9	97.1	0	0		
PHF	.375	.000	.500	.500	.563	.000	.000	.000	.000	.000	.000	.696	.375	.750	.750	.250	.773	.000	.000	.795	.742

SW 152nd Street & SW 107th Avenue

File Name : SW 152nd Street & SW 107th Avenue
Site Code : 00000000
Start Date : 5/24/2016
Page No : 4

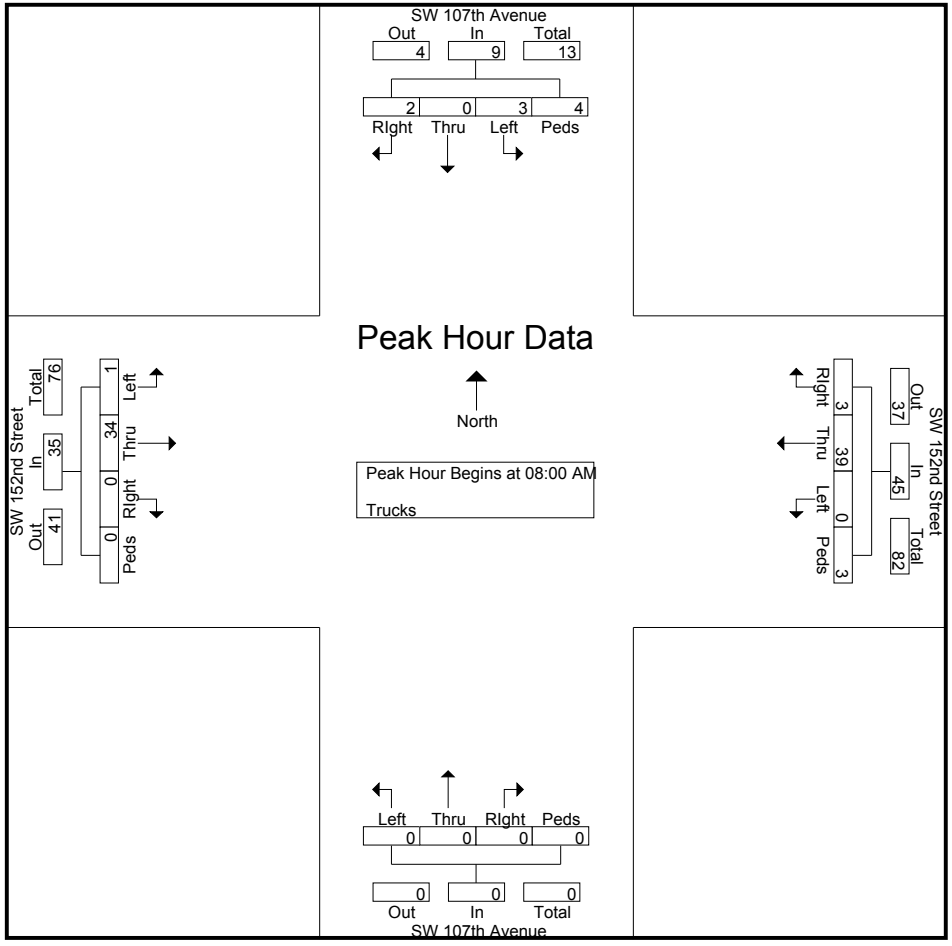

SW 152nd Street & SW 107th Avenue

File Name : SW 152nd Street & SW 107th Avenue
Site Code : 00000000
Start Date : 5/24/2016
Page No : 5

	SW 107th Avenue Southbound					SW 107th Avenue Northbound					SW 152nd Street Westbound					SW 152nd Street Eastbound					
Start Time	Left	Thru	RIght	Bikes	App. Total	Left	Thru	RIght	Bikes	App. Total	Left	Thru	RIght	Bikes	App. Total	Left	Thru	RIght	Bikes	App. Total	Int. Total
Peak Hour Analysis From 11:00 AM to 12:45 PM - Peak 1 of 1																					
Peak Hour for Entire Intersection Begins at 11:00 AM																					
11:00 AM	0	0	0	0	0	0	0	0	0	0	0	11	0	0	11	0	6	0	0	6	17
11:15 AM	0	0	0	0	0	0	0	0	0	0	0	**17**	**2**	0	**19**	0	**15**	0	0	**15**	**34**
11:30 AM	**1**	0	0	0	**1**	0	0	0	0	0	0	6	0	0	6	0	5	0	0	5	12
11:45 AM	0	0	0	0	0	0	0	0	0	0	0	9	1	0	10	0	4	0	0	4	14
Total Volume	1	0	0	0	1	0	0	0	0	0	0	43	3	0	46	0	30	0	0	30	77
% App. Total	100	0	0	0		0	0	0	0		0	93.5	6.5	0		0	100	0	0		
PHF	.250	.000	.000	.000	.250	.000	.000	.000	.000	.000	.000	.632	.375	.000	.605	.000	.500	.000	.000	.500	.566

SW 152nd Street & SW 107th Avenue

File Name : SW 152nd Street & SW 107th Avenue
Site Code : 00000000
Start Date : 5/24/2016
Page No : 6

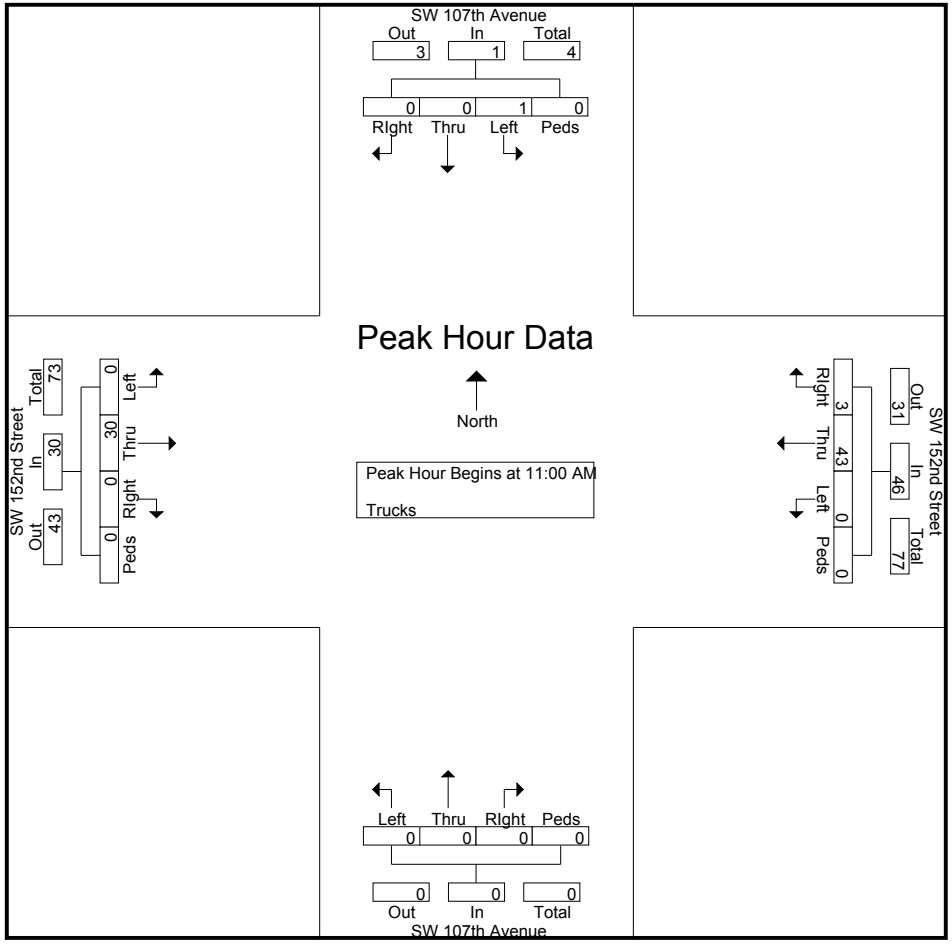

SW 152nd Street & SW 107th Avenue

File Name : SW 152nd Street & SW 107th Avenue
Site Code : 00000000
Start Date : 5/24/2016
Page No : 7

	SW 107th Avenue Southbound					SW 107th Avenue Northbound					SW 152nd Street Westbound					SW 152nd Street Eastbound					
Start Time	Left	Thru	RIght	Bikes	App. Total	Left	Thru	RIght	Bikes	App. Total	Left	Thru	RIght	Bikes	App. Total	Left	Thru	RIght	Bikes	App. Total	Int. Total
Peak Hour Analysis From 04:00 PM to 05:45 PM - Peak 1 of 1																					
Peak Hour for Entire Intersection Begins at 04:00 PM																					
04:00 PM	**2**	0	**1**	0	**3**	0	0	0	0	0	0	**16**	0	**1**	**17**	0	**5**	0	0	**5**	**25**
04:15 PM	2	0	1	0	3	0	0	0	0	0	0	7	0	1	8	0	2	0	0	2	13
04:30 PM	2	0	0	0	2	0	0	0	0	0	0	7	**3**	0	10	0	1	0	0	1	13
04:45 PM	0	0	0	0	0	0	0	0	0	0	0	8	0	0	8	0	3	0	0	3	11
Total Volume	6	0	2	0	8	0	0	0	0	0	0	38	3	2	43	0	11	0	0	11	62
% App. Total	75	0	25	0		0	0	0	0		0	88.4	7	4.7		0	100	0	0		
PHF	.750	.000	.500	.000	.667	.000	.000	.000	.000	.000	.000	.594	.250	.500	.632	.000	.550	.000	.000	.550	.620

SW 152nd Street & SW 107th Avenue

File Name : SW 152nd Street & SW 107th Avenue
Site Code : 00000000
Start Date : 5/24/2016
Page No : 8

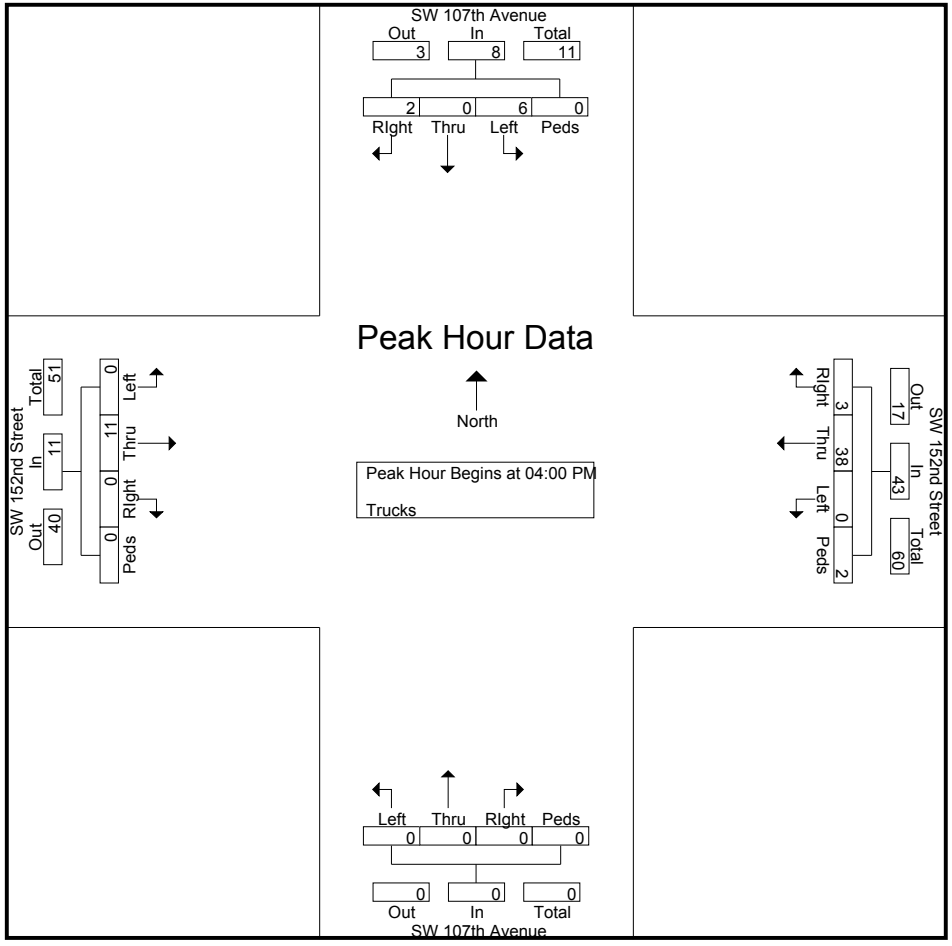

SW 152nd Street & SW 107th Avenue

File Name : SW 152nd Street & SW 107th Avenue
Site Code : 00000000
Start Date : 5/24/2016
Page No : 1

Groups Printed- Turns

	SW 107th Avenue Southbound					SW 107th Avenue Northbound					SW 152nd Street Westbound					SW 152nd Street Eastbound					
Start Time	Left	Thru	RIght	Peds/Bike	App. Total	Left	Thru	RIght	Peds/Bike	App. Total	Left	Thru	RIght	Peds/Bike	App. Total	Left	Thru	RIght	Peds/Bike	App. Total	Int. Total
*** BREAK ***																					
08:45 AM	0	0	0	0	0	0	0	0	0	0	0	0	0	0	0	1	0	0	0	1	1
Total	0	0	0	0	0	0	0	0	0	0	0	0	0	0	0	1	0	0	0	1	1
*** BREAK ***																					
12:00 PM	0	0	0	0	0	0	0	0	0	0	0	0	0	0	0	1	0	0	0	1	1
*** BREAK ***																					
12:30 PM	0	0	0	0	0	0	0	0	0	0	1	0	0	0	1	0	0	0	0	0	1
12:45 PM	0	0	0	0	0	0	0	0	0	0	0	0	0	0	0	2	0	0	0	2	2
Total	0	0	0	0	0	0	0	0	0	0	1	0	0	0	1	3	0	0	0	3	4
*** BREAK ***																					
04:00 PM	0	0	0	0	0	0	0	0	0	0	0	0	0	0	0	1	0	0	0	1	1
04:15 PM	0	0	0	0	0	0	0	0	0	0	0	0	0	0	0	1	0	0	0	1	1
04:30 PM	0	0	0	0	0	0	0	0	0	0	0	0	0	0	0	1	0	0	0	1	1
*** BREAK ***																					
Total	0	0	0	0	0	0	0	0	0	0	0	0	0	0	0	3	0	0	0	3	3
*** BREAK ***																					
Grand Total	0	0	0	0	0	0	0	0	0	0	1	0	0	0	1	7	0	0	0	7	8
Apprch %	0	0	0	0		0	0	0	0		100	0	0	0		100	0	0	0		
Total %	0	0	0	0	0	0	0	0	0	0	12.5	0	0	0	12.5	87.5	0	0	0	87.5	

SW 152nd Street & SW 107th Avenue

File Name : SW 152nd Street & SW 107th Avenue
Site Code : 00000000
Start Date : 5/24/2016
Page No : 2

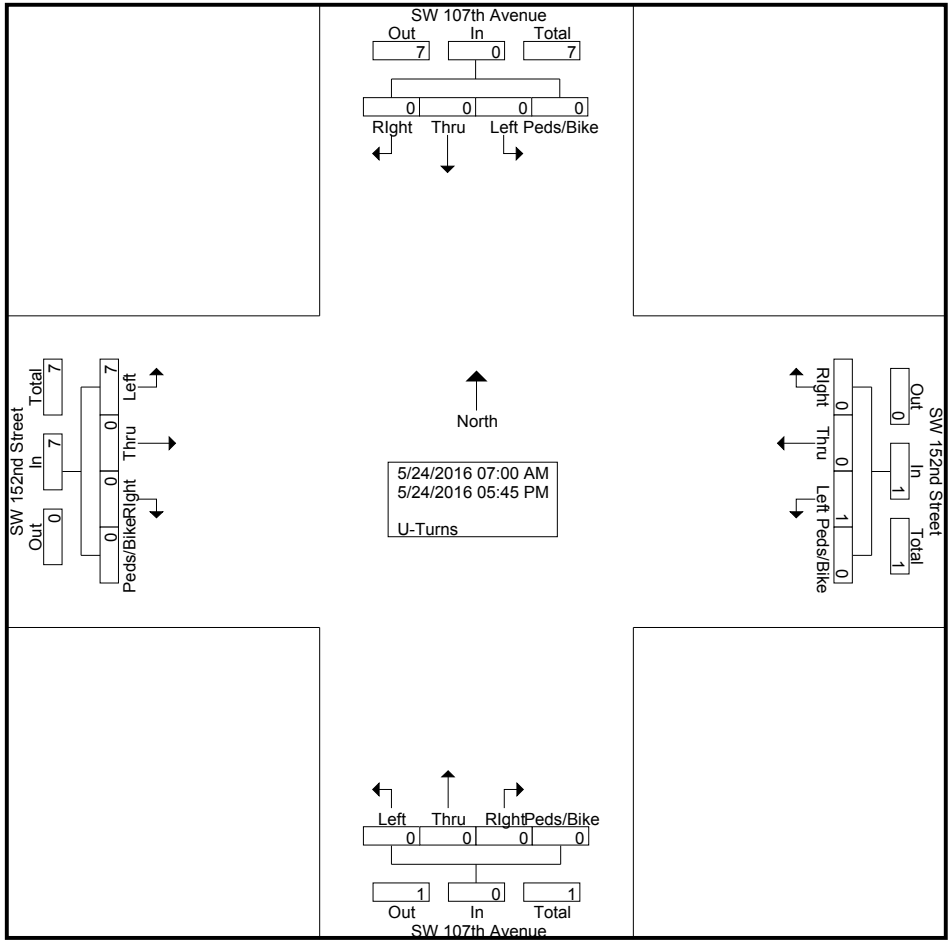

SW 152nd Street & SW 107th Avenue

File Name : SW 152nd Street & SW 107th Avenue
Site Code : 00000000
Start Date : 5/24/2016
Page No : 3

	SW 107th Avenue Southbound					SW 107th Avenue Northbound					SW 152nd Street Westbound					SW 152nd Street Eastbound					
Start Time	Left	Thru	RIght	Peds/Bike	App. Total	Left	Thru	RIght	Peds/Bike	App. Total	Left	Thru	RIght	Peds/Bike	App. Total	Left	Thru	RIght	Peds/Bike	App. Total	Int. Total
Peak Hour Analysis From 07:00 AM to 08:45 AM - Peak 1 of 1																					
Peak Hour for Entire Intersection Begins at 08:00 AM																					
08:00 AM	0	0	0	0	0	0	0	0	0	0	0	0	0	0	0	0	0	0	0	0	0
08:15 AM	0	0	0	0	0	0	0	0	0	0	0	0	0	0	0	0	0	0	0	0	0
08:30 AM	0	0	0	0	0	0	0	0	0	0	0	0	0	0	0	0	0	0	0	0	0
08:45 AM	0	0	0	0	0	0	0	0	0	0	0	0	0	0	0	**1**	0	0	0	**1**	**1**
Total Volume	0	0	0	0	0	0	0	0	0	0	0	0	0	0	0	1	0	0	0	1	1
% App. Total	0	0	0	0		0	0	0	0		0	0	0	0		100	0	0	0		
PHF	.000	.000	.000	.000	.000	.000	.000	.000	.000	.000	.000	.000	.000	.000	.000	.250	.000	.000	.000	.250	.250

SW 152nd Street & SW 107th Avenue

File Name : SW 152nd Street & SW 107th Avenue
Site Code : 00000000
Start Date : 5/24/2016
Page No : 4

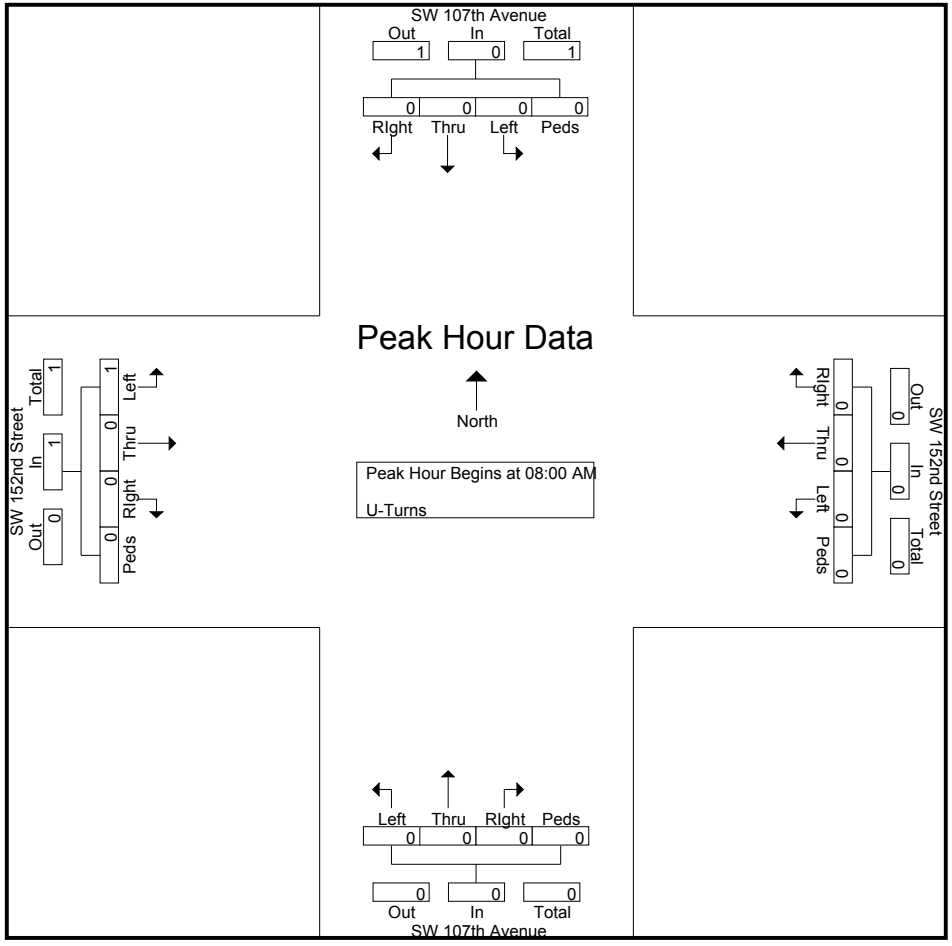

SW 152nd Street & SW 107th Avenue

File Name : SW 152nd Street & SW 107th Avenue
Site Code : 00000000
Start Date : 5/24/2016
Page No : 5

	SW 107th Avenue Southbound					SW 107th Avenue Northbound					SW 152nd Street Westbound					SW 152nd Street Eastbound					
Start Time	Left	Thru	RIght	Peds/Bike	App. Total	Left	Thru	RIght	Peds/Bike	App. Total	Left	Thru	RIght	Peds/Bike	App. Total	Left	Thru	RIght	Peds/Bike	App. Total	Int. Total
Peak Hour Analysis From 11:00 AM to 12:45 PM - Peak 1 of 1																					
Peak Hour for Entire Intersection Begins at 12:00 PM																					
12:00 PM	0	0	0	0	0	0	0	0	0	0	0	0	0	0	0	1	0	0	0	1	1
12:15 PM	0	0	0	0	0	0	0	0	0	0	0	0	0	0	0	0	0	0	0	0	0
12:30 PM	0	0	0	0	0	0	0	0	0	0	**1**	0	0	0	**1**	0	0	0	0	0	1
12:45 PM	0	0	0	0	0	0	0	0	0	0	0	0	0	0	0	**2**	0	0	0	**2**	**2**
Total Volume	0	0	0	0	0	0	0	0	0	0	1	0	0	0	1	3	0	0	0	3	4
% App. Total	0	0	0	0		0	0	0	0		100	0	0	0		100	0	0	0		
PHF	.000	.000	.000	.000	.000	.000	.000	.000	.000	.000	.250	.000	.000	.000	.250	.375	.000	.000	.000	.375	.500

SW 152nd Street & SW 107th Avenue

File Name : SW 152nd Street & SW 107th Avenue
Site Code : 00000000
Start Date : 5/24/2016
Page No : 6

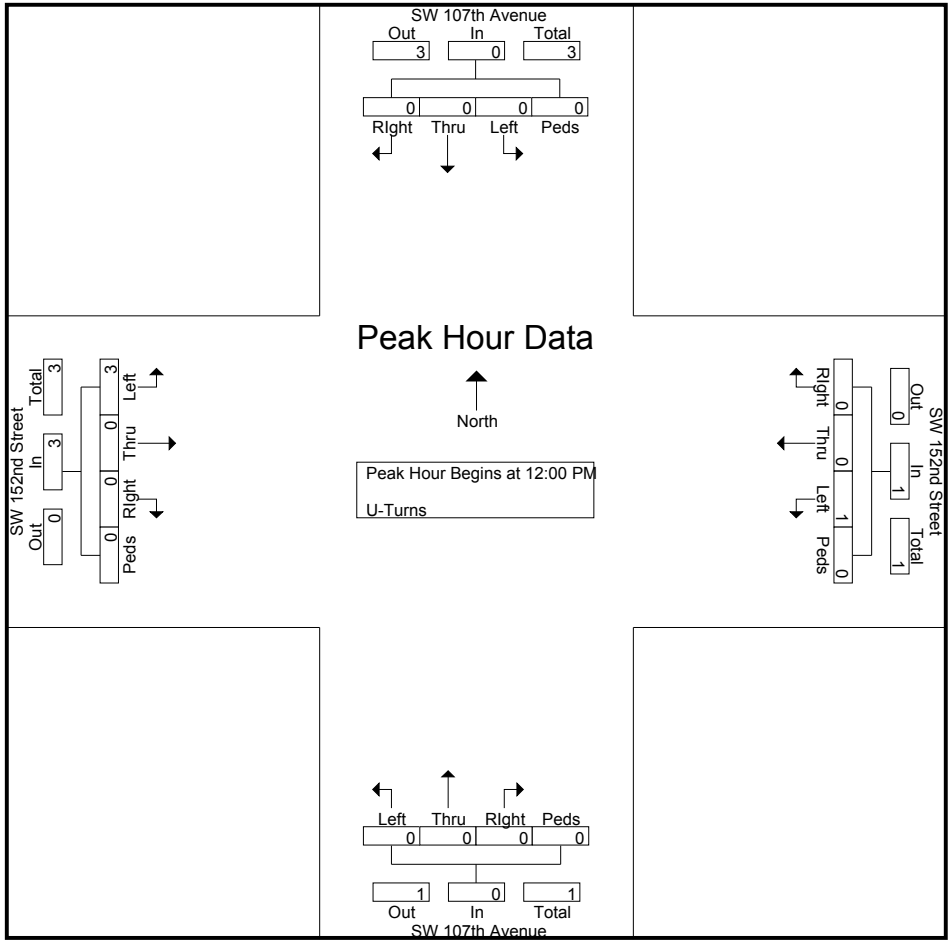

SW 152nd Street & SW 107th Avenue

File Name : SW 152nd Street & SW 107th Avenue
Site Code : 00000000
Start Date : 5/24/2016
Page No : 7

	SW 107th Avenue Southbound					SW 107th Avenue Northbound					SW 152nd Street Westbound					SW 152nd Street Eastbound					
Start Time	Left	Thru	RIght	Peds/Bike	App. Total	Left	Thru	RIght	Peds/Bike	App. Total	Left	Thru	RIght	Peds/Bike	App. Total	Left	Thru	RIght	Peds/Bike	App. Total	Int. Total
Peak Hour Analysis From 04:00 PM to 05:45 PM - Peak 1 of 1																					
Peak Hour for Entire Intersection Begins at 04:00 PM																					
04:00 PM	0	0	0	0	0	0	0	0	0	0	0	0	0	0	0	**1**	0	0	0	**1**	**1**
04:15 PM	0	0	0	0	0	0	0	0	0	0	0	0	0	0	0	1	0	0	0	1	1
04:30 PM	0	0	0	0	0	0	0	0	0	0	0	0	0	0	0	1	0	0	0	1	1
04:45 PM	0	0	0	0	0	0	0	0	0	0	0	0	0	0	0	0	0	0	0	0	0
Total Volume	0	0	0	0	0	0	0	0	0	0	0	0	0	0	0	3	0	0	0	3	3
% App. Total	0	0	0	0		0	0	0	0		0	0	0	0		100	0	0	0		
PHF	.000	.000	.000	.000	.000	.000	.000	.000	.000	.000	.000	.000	.000	.000	.000	.750	.000	.000	.000	.750	.750

SW 152nd Street & SW 107th Avenue

File Name : SW 152nd Street & SW 107th Avenue
Site Code : 00000000
Start Date : 5/24/2016
Page No : 8

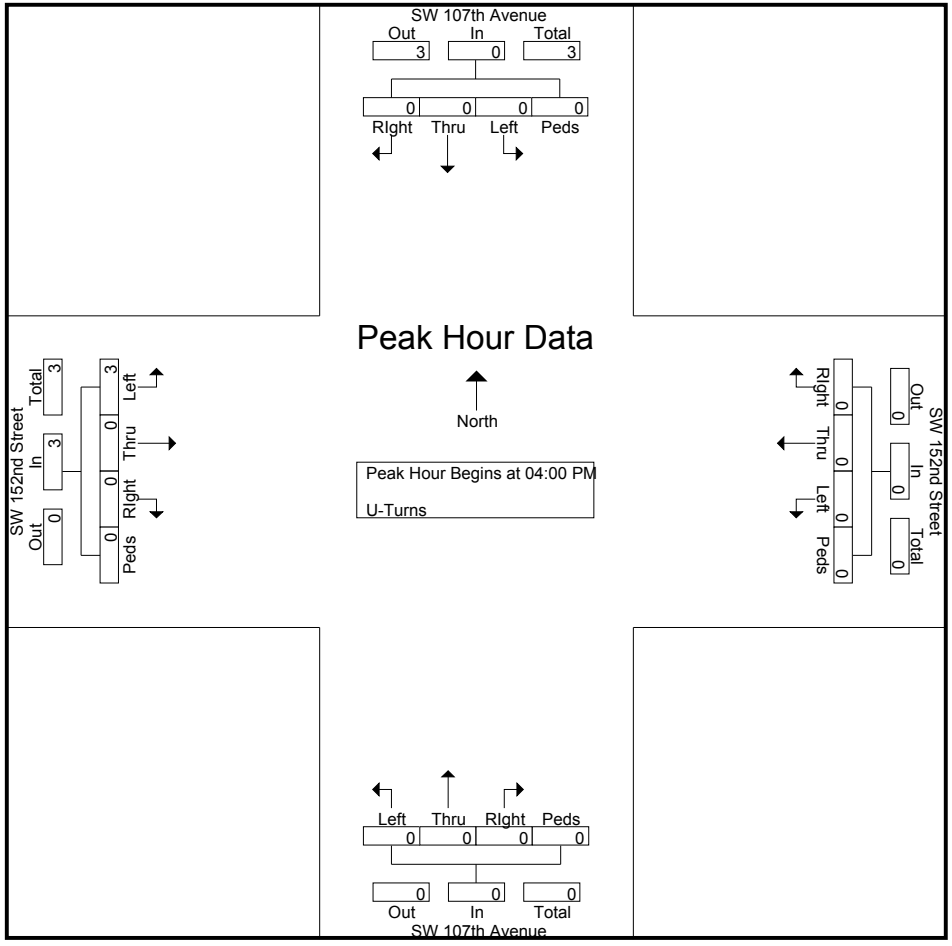

SW 152nd Street & SW 107th Avenue

File Name : SW 152nd Street & SW 107th Avenue
Site Code : 00000000
Start Date : 5/24/2016
Page No : 1

Groups Printed- Veh - Trucks - Turns

	SW 107th Avenue Southbound					SW 107th Avenue Northbound					SW 152nd Street Westbound					SW 152nd Street Eastbound					
Start Time	Left	Thru	RIght	Peds/Bike	App. Total	Left	Thru	RIght	Peds/Bike	App. Total	Left	Thru	RIght	Peds/Bike	App. Total	Left	Thru	RIght	Peds/Bike	App. Total	Int. Total
07:00 AM	21	0	35	0	56	0	0	0	0	0	0	256	16	0	272	41	287	0	1	329	657
07:15 AM	15	0	35	1	51	0	0	0	0	0	0	279	21	1	301	20	232	0	0	252	604
07:30 AM	30	0	18	0	48	0	0	0	0	0	0	225	10	2	237	2	266	0	0	268	553
07:45 AM	17	0	15	0	32	0	0	0	0	0	0	225	25	1	251	9	229	0	0	238	521
Total	83	0	103	1	187	0	0	0	0	0	0	985	72	4	1061	72	1014	0	1	1087	2335
08:00 AM	20	0	15	3	38	0	0	0	0	0	0	246	33	1	280	6	295	0	0	301	619
08:15 AM	35	0	10	3	48	0	0	0	0	0	0	214	18	2	234	7	287	0	0	294	576
08:30 AM	40	0	19	2	61	0	0	0	0	0	0	242	7	1	250	8	311	0	0	319	630
08:45 AM	27	0	12	0	39	0	0	0	0	0	0	191	14	6	211	6	376	0	0	382	632
Total	122	0	56	8	186	0	0	0	0	0	0	893	72	10	975	27	1269	0	0	1296	2457
*** BREAK ***																					
11:00 AM	13	0	10	0	23	0	0	0	0	0	0	239	11	1	251	10	246	0	0	256	530
11:15 AM	19	0	10	0	29	0	0	0	0	0	0	236	13	0	249	6	234	0	0	240	518
11:30 AM	13	0	9	0	22	0	0	0	0	0	0	232	14	0	246	7	210	0	0	217	485
11:45 AM	9	0	13	0	22	0	0	0	0	0	0	215	13	0	228	6	226	0	0	232	482
Total	54	0	42	0	96	0	0	0	0	0	0	922	51	1	974	29	916	0	0	945	2015
12:00 PM	13	0	11	0	24	0	0	0	0	0	0	213	16	2	231	10	221	0	0	231	486
12:15 PM	8	0	7	1	16	0	0	0	0	0	0	214	14	1	229	9	229	0	0	238	483
12:30 PM	15	0	11	1	27	0	0	0	0	0	1	259	15	1	276	16	236	0	0	252	555
12:45 PM	13	0	11	2	26	0	0	0	0	0	0	229	10	1	240	3	250	0	1	254	520
Total	49	0	40	4	93	0	0	0	0	0	1	915	55	5	976	38	936	0	1	975	2044
*** BREAK ***																					
04:00 PM	37	0	26	0	63	0	0	0	0	0	0	370	16	2	388	9	211	0	0	220	671
04:15 PM	32	0	20	0	52	0	0	0	0	0	0	363	16	1	380	11	215	0	0	226	658
04:30 PM	35	0	8	0	43	0	0	0	0	0	0	393	23	0	416	10	199	0	0	209	668
04:45 PM	31	0	10	0	41	0	0	0	0	0	0	340	17	0	357	5	191	0	0	196	594
Total	135	0	64	0	199	0	0	0	0	0	0	1466	72	3	1541	35	816	0	0	851	2591
05:00 PM	45	0	13	0	58	0	0	0	0	0	0	384	13	0	397	11	213	0	0	224	679
05:15 PM	42	0	14	0	56	0	0	0	0	0	0	392	23	0	415	9	182	0	0	191	662
05:30 PM	58	0	21	1	80	0	0	0	0	0	0	388	19	5	412	5	168	0	0	173	665
05:45 PM	44	0	14	0	58	0	0	0	0	0	0	393	22	0	415	9	210	0	0	219	692
Total	189	0	62	1	252	0	0	0	0	0	0	1557	77	5	1639	34	773	0	0	807	2698
Grand Total	632	0	367	14	1013	0	0	0	0	0	1	6738	399	28	7166	235	5724	0	2	5961	14140
Apprch %	62.4	0	36.2	1.4		0	0	0	0		0	94	5.6	0.4		3.9	96	0	0		
Total %	4.5	0	2.6	0.1	7.2	0	0	0	0	0	0	47.7	2.8	0.2	50.7	1.7	40.5	0	0	42.2	
Veh	618	0	361	6	985	0	0	0	0	0	0	6544	378	17	6939	226	5590	0	1	5817	13741
% Veh	97.8	0	98.4	42.9	97.2	0	0	0	0	0	0	97.1	94.7	60.7	96.8	96.2	97.7	0	50	97.6	97.2
Trucks	14	0	6	8	28	0	0	0	0	0	0	194	21	11	226	2	134	0	1	137	391
% Trucks	2.2	0	1.6	57.1	2.8	0	0	0	0	0	0	2.9	5.3	39.3	3.2	0.9	2.3	0	50	2.3	2.8

SW 152nd Street & SW 107th Avenue

File Name : SW 152nd Street & SW 107th Avenue
Site Code : 00000000
Start Date : 5/24/2016
Page No : 2

Groups Printed- Veh - Trucks - Turns

	SW 107th Avenue Southbound					SW 107th Avenue Northbound					SW 152nd Street Westbound					SW 152nd Street Eastbound					
	Left	Thru	RIght	Peds/Bike	App. Total	Left	Thru	RIght	Peds/Bike	App. Total	Left	Thru	RIght	Peds/Bike	App. Total	Left	Thru	RIght	Peds/Bike	App. Total	Int. Total
U-Turns	0	0	0	0	0	0	0	0	0	0	1	0	0	0	1	7	0	0	0	7	8
% U-Turns	0	0	0	0	0	0	0	0	0	0	100	0	0	0	0	3	0	0	0	0.1	0.1

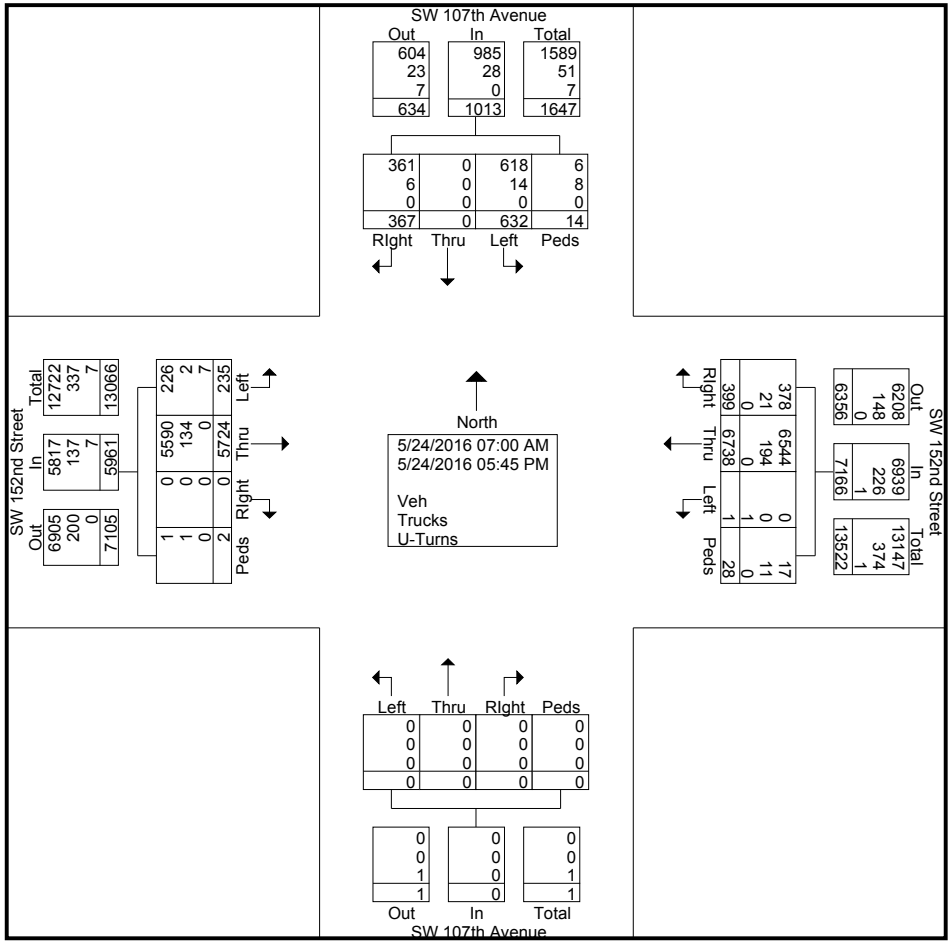

SW 152nd Street & SW 107th Avenue

File Name : SW 152nd Street & SW 107th Avenue
Site Code : 00000000
Start Date : 5/24/2016
Page No : 3

	SW 107th Avenue Southbound					SW 107th Avenue Northbound					SW 152nd Street Westbound					SW 152nd Street Eastbound					
Start Time	Left	Thru	RIght	Peds/Bike	App. Total	Left	Thru	RIght	Peds/Bike	App. Total	Left	Thru	RIght	Peds/Bike	App. Total	Left	Thru	RIght	Peds/Bike	App. Total	Int. Total
Peak Hour Analysis From 07:00 AM to 08:45 AM - Peak 1 of 1																					
Peak Hour for Entire Intersection Begins at 08:00 AM																					
08:00 AM	20	0	15	**3**	38	0	0	0	0	0	0	**246**	**33**	1	**280**	6	295	0	0	301	619
08:15 AM	35	0	10	3	48	0	0	0	0	0	0	214	18	2	234	7	287	0	0	294	576
08:30 AM	**40**	0	**19**	2	**61**	0	0	0	0	0	0	242	7	1	250	**8**	311	0	0	319	630
08:45 AM	27	0	12	0	39	0	0	0	0	0	0	191	14	**6**	211	6	**376**	0	0	**382**	**632**
Total Volume	122	0	56	8	186	0	0	0	0	0	0	893	72	10	975	27	1269	0	0	1296	2457
% App. Total	65.6	0	30.1	4.3		0	0	0	0		0	91.6	7.4	1		2.1	97.9	0	0		
PHF	.763	.000	.737	.667	.762	.000	.000	.000	.000	.000	.000	.908	.545	.417	.871	.844	.844	.000	.000	.848	.972

SW 152nd Street & SW 107th Avenue

File Name : SW 152nd Street & SW 107th Avenue
Site Code : 00000000
Start Date : 5/24/2016
Page No : 4

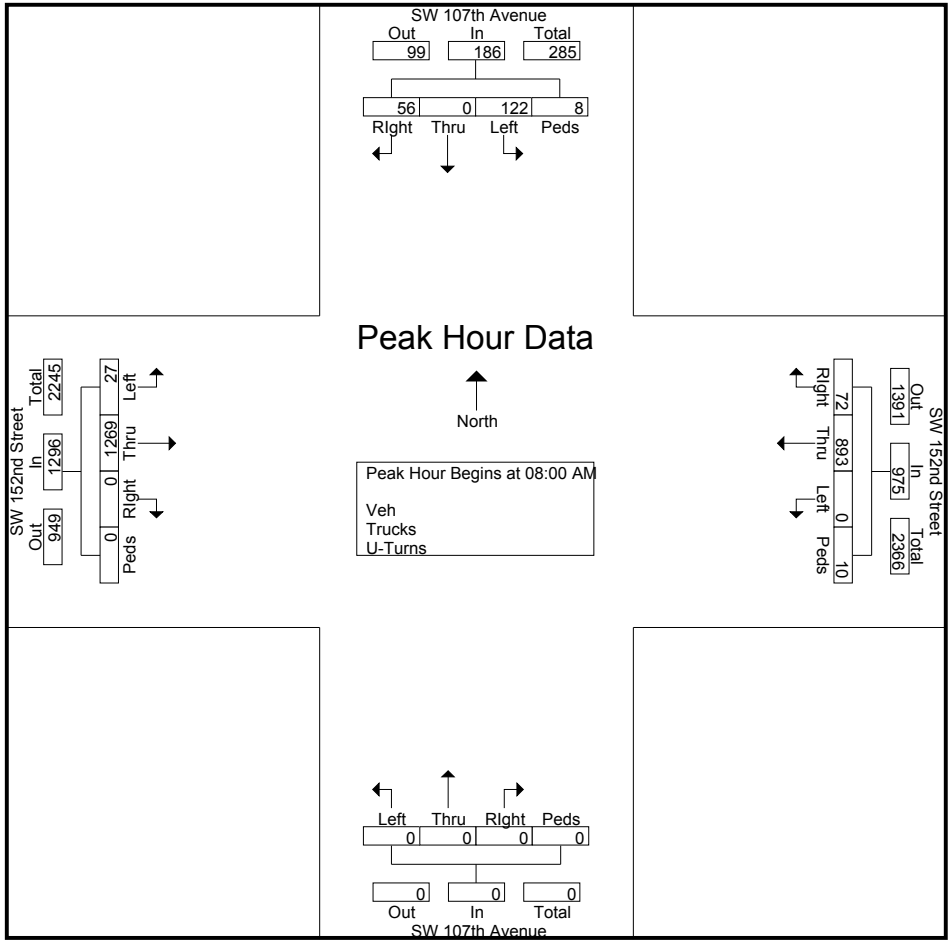

SW 152nd Street & SW 107th Avenue

File Name : SW 152nd Street & SW 107th Avenue
Site Code : 00000000
Start Date : 5/24/2016
Page No : 5

	SW 107th Avenue Southbound					SW 107th Avenue Northbound					SW 152nd Street Westbound					SW 152nd Street Eastbound					
Start Time	Left	Thru	RIght	Peds/Bike	App. Total	Left	Thru	RIght	Peds/Bike	App. Total	Left	Thru	RIght	Peds/Bike	App. Total	Left	Thru	RIght	Peds/Bike	App. Total	Int. Total
Peak Hour Analysis From 11:00 AM to 12:45 PM - Peak 1 of 1																					
Peak Hour for Entire Intersection Begins at 12:00 PM																					
12:00 PM	13	0	**11**	0	24	0	0	0	0	0	0	213	**16**	**2**	231	10	221	0	0	231	486
12:15 PM	8	0	7	1	16	0	0	0	0	0	0	214	14	1	229	9	229	0	0	238	483
12:30 PM	**15**	0	11	1	**27**	0	0	0	0	0	**1**	**259**	15	1	**276**	**16**	236	0	0	252	**555**
12:45 PM	13	0	11	**2**	26	0	0	0	0	0	0	229	10	1	240	3	**250**	0	**1**	**254**	520
Total Volume	49	0	40	4	93	0	0	0	0	0	1	915	55	5	976	38	936	0	1	975	2044
% App. Total	52.7	0	43	4.3		0	0	0	0		0.1	93.8	5.6	0.5		3.9	96	0	0.1		
PHF	.817	.000	.909	.500	.861	.000	.000	.000	.000	.000	.250	.883	.859	.625	.884	.594	.936	.000	.250	.960	.921

SW 152nd Street & SW 107th Avenue

File Name : SW 152nd Street & SW 107th Avenue
Site Code : 00000000
Start Date : 5/24/2016
Page No : 6

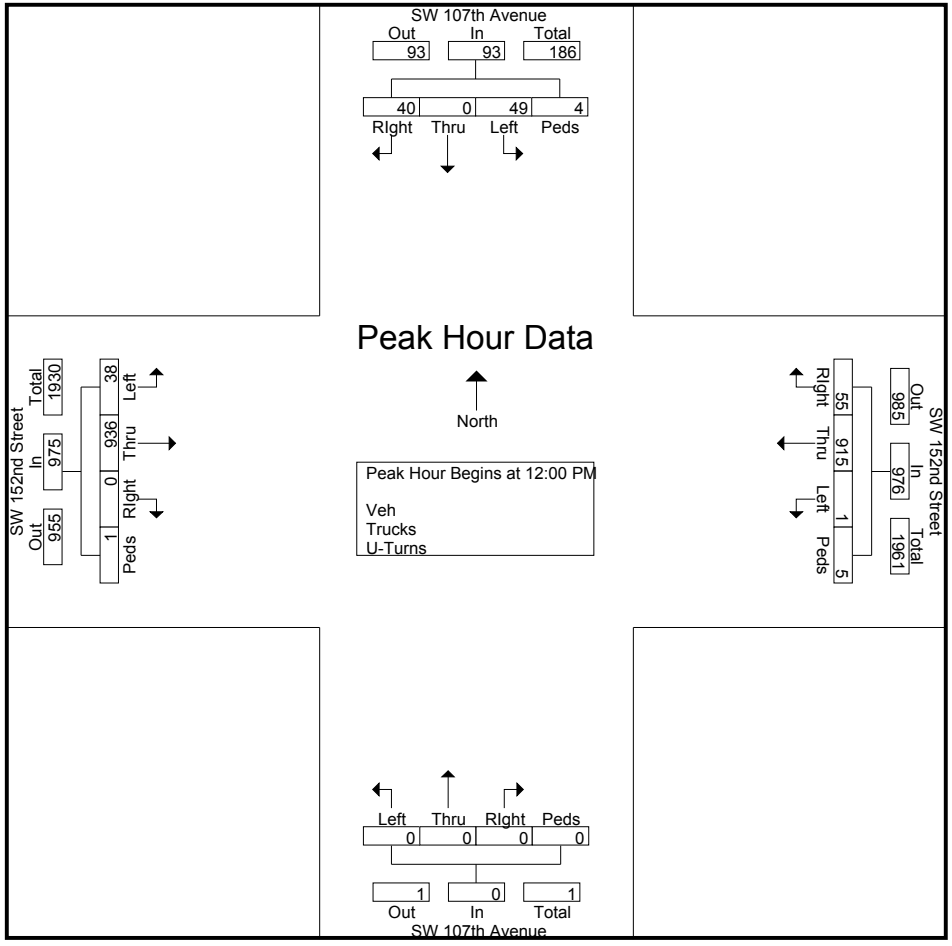

SW 152nd Street & SW 107th Avenue

File Name : SW 152nd Street & SW 107th Avenue
Site Code : 00000000
Start Date : 5/24/2016
Page No : 7

	SW 107th Avenue Southbound					SW 107th Avenue Northbound					SW 152nd Street Westbound					SW 152nd Street Eastbound					
Start Time	Left	Thru	RIght	Peds/Bike	App. Total	Left	Thru	RIght	Peds/Bike	App. Total	Left	Thru	RIght	Peds/Bike	App. Total	Left	Thru	RIght	Peds/Bike	App. Total	Int. Total
Peak Hour Analysis From 04:00 PM to 05:45 PM - Peak 1 of 1																					
Peak Hour for Entire Intersection Begins at 05:00 PM																					
05:00 PM	45	0	13	0	58	0	0	0	0	0	0	384	13	0	397	**11**	**213**	0	0	**224**	679
05:15 PM	42	0	14	0	56	0	0	0	0	0	0	392	**23**	0	**415**	9	182	0	0	191	662
05:30 PM	**58**	0	**21**	**1**	**80**	0	0	0	0	0	0	388	19	**5**	412	5	168	0	0	173	665
05:45 PM	44	0	14	0	58	0	0	0	0	0	0	**393**	22	0	415	9	210	0	0	219	**692**
Total Volume	189	0	62	1	252	0	0	0	0	0	0	1557	77	5	1639	34	773	0	0	807	2698
% App. Total	75	0	24.6	0.4		0	0	0	0		0	95	4.7	0.3		4.2	95.8	0	0		
PHF	.815	.000	.738	.250	.788	.000	.000	.000	.000	.000	.000	.990	.837	.250	.987	.773	.907	.000	.000	.901	.975

SW 152nd Street & SW 107th Avenue

File Name : SW 152nd Street & SW 107th Avenue
Site Code : 00000000
Start Date : 5/24/2016
Page No : 8

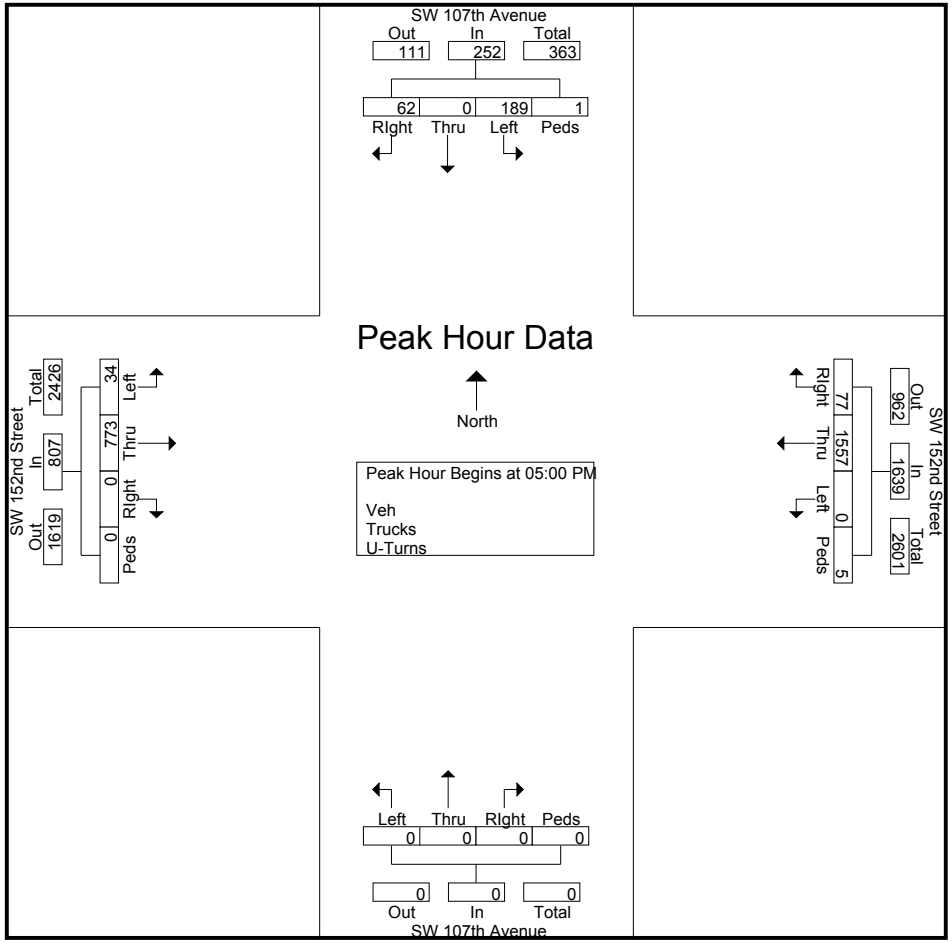

SW 152nd Street & SW 112nd Avenue

File Name : SW 152nd Street & SW 112nd Avenue
Site Code : 00000000
Start Date : 5/24/2016
Page No : 1

Groups Printed- Trucks

	SW 112nd Avenue Southbound					SW 112nd Avenue Northbound					SW 152nd Street Westbound					SW 152nd Street Eastbound					
Start Time	Left	Thru	RIght	Bikes	App. Total	Left	Thru	RIght	Bikes	App. Total	Left	Thru	RIght	Bikes	App. Total	Left	Thru	RIght	Bikes	App. Total	Int. Total
07:00 AM	0	2	0	0	2	1	1	0	0	2	0	6	1	0	7	1	1	0	0	2	13
07:15 AM	0	2	0	0	2	1	0	0	0	1	0	4	2	0	6	1	2	0	0	3	12
07:30 AM	0	1	1	1	3	0	1	0	0	1	0	8	2	0	10	0	3	1	0	4	18
07:45 AM	0	1	0	0	1	1	5	0	0	6	0	4	0	0	4	1	8	2	0	11	22
Total	0	6	1	1	8	3	7	0	0	10	0	22	5	0	27	3	14	3	0	20	65
08:00 AM	0	3	2	0	5	2	3	0	0	5	0	9	0	0	9	2	5	0	0	7	26
08:15 AM	0	1	0	0	1	1	2	0	0	3	0	7	1	1	9	0	8	2	0	10	23
08:30 AM	0	0	1	2	3	2	0	1	0	3	1	13	0	0	14	1	9	0	0	10	30
08:45 AM	0	1	0	2	3	4	1	0	0	5	2	5	1	2	10	1	7	1	0	9	27
Total	0	5	3	4	12	9	6	1	0	16	3	34	2	3	42	4	29	3	0	36	106
*** BREAK ***																					
11:00 AM	0	1	0	0	1	2	2	0	0	4	1	8	1	0	10	1	5	2	0	8	23
11:15 AM	0	3	2	0	5	2	1	0	0	3	0	11	0	0	11	0	17	0	1	18	37
11:30 AM	0	0	0	1	1	1	0	0	0	1	0	8	0	1	9	1	2	0	0	3	14
11:45 AM	0	1	1	2	4	3	1	0	0	4	1	6	0	0	7	0	4	3	0	7	22
Total	0	5	3	3	11	8	4	0	0	12	2	33	1	1	37	2	28	5	1	36	96
12:00 PM	0	0	1	2	3	5	1	0	0	6	0	6	0	0	6	0	4	3	0	7	22
12:15 PM	0	1	0	2	3	2	0	0	0	2	0	15	1	0	16	0	5	0	0	5	26
12:30 PM	0	1	0	1	2	1	0	0	0	1	0	4	0	0	4	0	3	0	0	3	10
12:45 PM	1	0	0	0	1	3	1	0	0	4	0	7	0	0	7	0	3	3	0	6	18
Total	1	2	1	5	9	11	2	0	0	13	0	32	1	0	33	0	15	6	0	21	76
*** BREAK ***																					
04:00 PM	0	0	0	1	1	0	1	0	0	1	3	12	0	0	15	0	2	0	0	2	19
04:15 PM	0	2	0	2	4	0	0	0	0	0	1	7	0	0	8	1	3	1	0	5	17
04:30 PM	0	3	1	0	4	1	0	0	0	1	2	6	0	0	8	0	1	0	0	1	14
04:45 PM	0	0	0	0	0	0	1	0	0	1	2	7	0	0	9	0	4	0	0	4	14
Total	0	5	1	3	9	1	2	0	0	3	8	32	0	0	40	1	10	1	0	12	64
05:00 PM	0	1	1	1	3	0	1	0	0	1	0	7	0	1	8	0	3	0	0	3	15
05:15 PM	0	0	0	3	3	1	1	0	0	2	0	5	0	0	5	0	1	0	0	1	11
05:30 PM	1	2	0	1	4	0	0	0	0	0	0	6	0	0	6	0	2	0	0	2	12
05:45 PM	0	0	0	0	0	1	1	0	0	2	1	3	0	0	4	0	3	0	0	3	9
Total	1	3	1	5	10	2	3	0	0	5	1	21	0	1	23	0	9	0	0	9	47
Grand Total	2	26	10	21	59	34	24	1	0	59	14	174	9	5	202	10	105	18	1	134	454
Apprch %	3.4	44.1	16.9	35.6		57.6	40.7	1.7	0		6.9	86.1	4.5	2.5		7.5	78.4	13.4	0.7		
Total %	0.4	5.7	2.2	4.6	13	7.5	5.3	0.2	0	13	3.1	38.3	2	1.1	44.5	2.2	23.1	4	0.2	29.5	

SW 152nd Street & SW 112nd Avenue

File Name : SW 152nd Street & SW 112nd Avenue
Site Code : 00000000
Start Date : 5/24/2016
Page No : 2

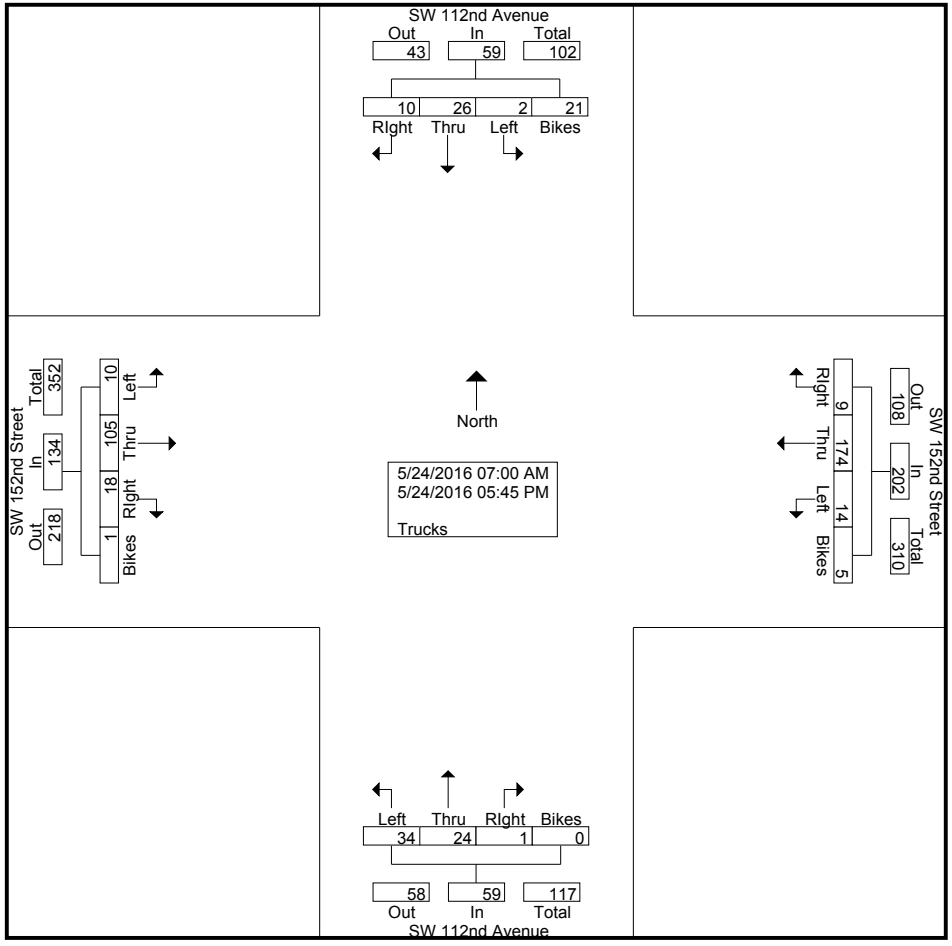

SW 152nd Street & SW 112nd Avenue

File Name : SW 152nd Street & SW 112nd Avenue
Site Code : 00000000
Start Date : 5/24/2016
Page No : 3

	SW 112nd Avenue Southbound					SW 112nd Avenue Northbound					SW 152nd Street Westbound					SW 152nd Street Eastbound					
Start Time	Left	Thru	RIght	Bikes	App. Total	Left	Thru	RIght	Bikes	App. Total	Left	Thru	RIght	Bikes	App. Total	Left	Thru	RIght	Bikes	App. Total	Int. Total
Peak Hour Analysis From 07:00 AM to 08:45 AM - Peak 1 of 1																					
Peak Hour for Entire Intersection Begins at 08:00 AM																					
08:00 AM	0	**3**	**2**	0	**5**	2	**3**	0	0	**5**	0	9	0	0	9	**2**	5	0	0	7	26
08:15 AM	0	1	0	0	1	1	2	0	0	3	0	7	**1**	1	9	0	8	**2**	0	**10**	23
08:30 AM	0	0	1	**2**	3	2	0	**1**	0	3	1	**13**	0	0	**14**	1	**9**	0	0	10	**30**
08:45 AM	0	1	0	2	3	**4**	1	0	0	5	**2**	5	1	**2**	10	1	7	1	0	9	27
Total Volume	0	5	3	4	12	9	6	1	0	16	3	34	2	3	42	4	29	3	0	36	106
% App. Total	0	41.7	25	33.3		56.2	37.5	6.2	0		7.1	81	4.8	7.1		11.1	80.6	8.3	0		
PHF	.000	.417	.375	.500	.600	.563	.500	.250	.000	.800	.375	.654	.500	.375	.750	.500	.806	.375	.000	.900	.883

SW 152nd Street & SW 112nd Avenue

File Name : SW 152nd Street & SW 112nd Avenue
Site Code : 00000000
Start Date : 5/24/2016
Page No : 4

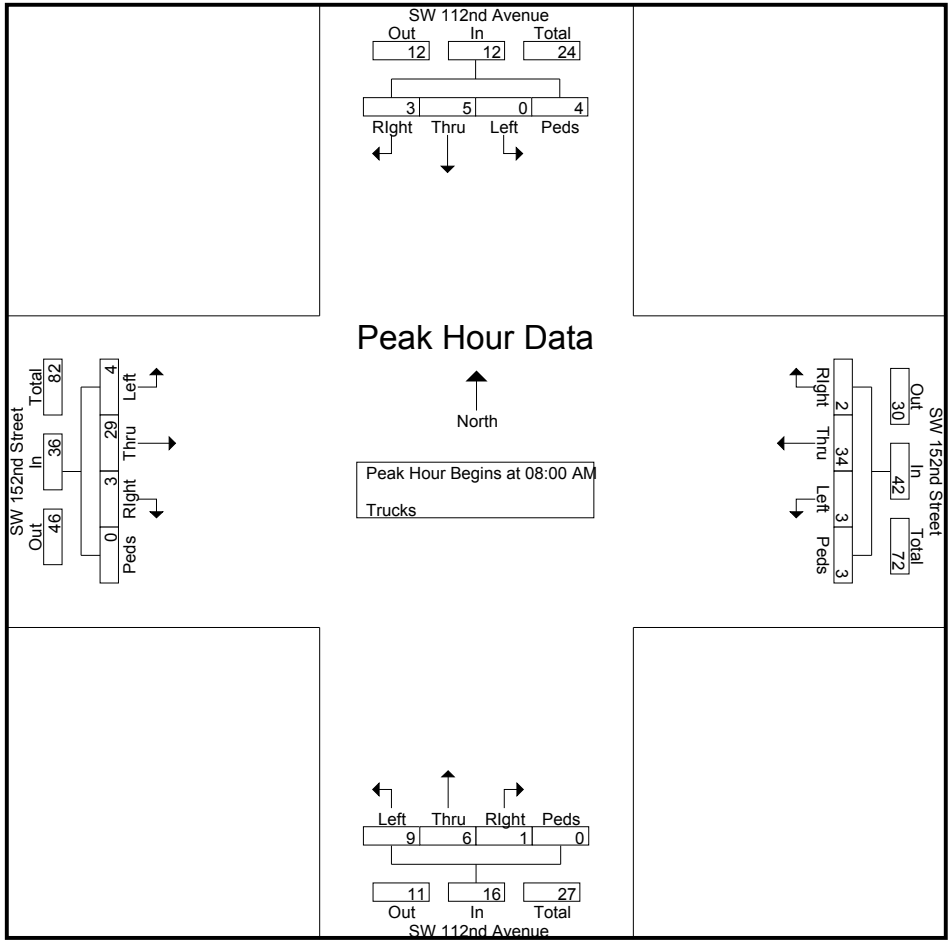

SW 152nd Street & SW 112nd Avenue

File Name : SW 152nd Street & SW 112nd Avenue
Site Code : 00000000
Start Date : 5/24/2016
Page No : 5

	SW 112nd Avenue Southbound					SW 112nd Avenue Northbound					SW 152nd Street Westbound					SW 152nd Street Eastbound					
Start Time	Left	Thru	RIght	Bikes	App. Total	Left	Thru	RIght	Bikes	App. Total	Left	Thru	RIght	Bikes	App. Total	Left	Thru	RIght	Bikes	App. Total	Int. Total
Peak Hour Analysis From 11:00 AM to 12:45 PM - Peak 1 of 1																					
Peak Hour for Entire Intersection Begins at 11:00 AM																					
11:00 AM	0	1	0	0	1	2	**2**	0	0	**4**	**1**	8	**1**	0	10	**1**	5	2	0	8	23
11:15 AM	0	**3**	**2**	0	**5**	2	1	0	0	3	0	**11**	0	0	**11**	0	**17**	0	**1**	**18**	**37**
11:30 AM	0	0	0	1	1	1	0	0	0	1	0	8	0	**1**	9	1	2	0	0	3	14
11:45 AM	0	1	1	**2**	4	**3**	1	0	0	4	1	6	0	0	7	0	4	**3**	0	7	22
Total Volume	0	5	3	3	11	8	4	0	0	12	2	33	1	1	37	2	28	5	1	36	96
% App. Total	0	45.5	27.3	27.3		66.7	33.3	0	0		5.4	89.2	2.7	2.7		5.6	77.8	13.9	2.8		
PHF	.000	.417	.375	.375	.550	.667	.500	.000	.000	.750	.500	.750	.250	.250	.841	.500	.412	.417	.250	.500	.649

SW 152nd Street & SW 112nd Avenue

File Name : SW 152nd Street & SW 112nd Avenue
Site Code : 00000000
Start Date : 5/24/2016
Page No : 6

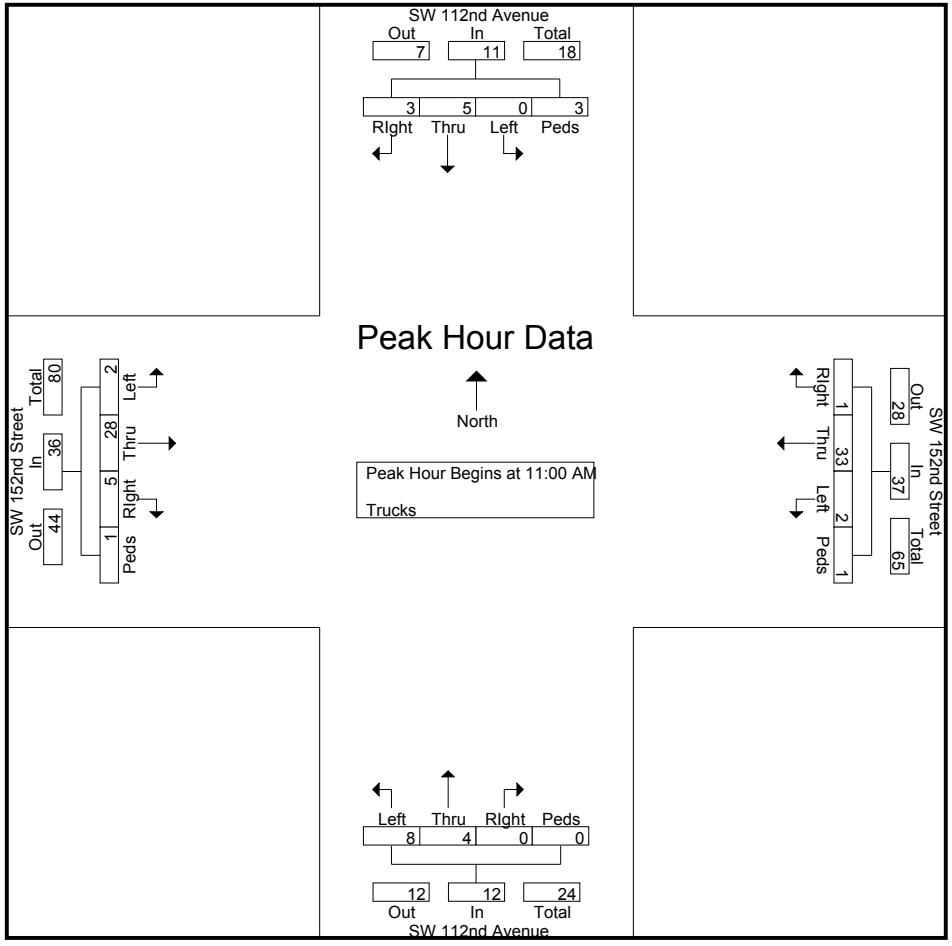

SW 152nd Street & SW 112nd Avenue

File Name : SW 152nd Street & SW 112nd Avenue
Site Code : 00000000
Start Date : 5/24/2016
Page No : 7

	SW 112nd Avenue Southbound					SW 112nd Avenue Northbound					SW 152nd Street Westbound					SW 152nd Street Eastbound					
Start Time	Left	Thru	RIght	Bikes	App. Total	Left	Thru	RIght	Bikes	App. Total	Left	Thru	RIght	Bikes	App. Total	Left	Thru	RIght	Bikes	App. Total	Int. Total
Peak Hour Analysis From 04:00 PM to 05:45 PM - Peak 1 of 1																					
Peak Hour for Entire Intersection Begins at 04:00 PM																					
04:00 PM	0	0	0	1	1	0	**1**	0	0	**1**	**3**	**12**	0	0	**15**	0	2	0	0	2	**19**
04:15 PM	0	2	0	**2**	**4**	0	0	0	0	0	1	7	0	0	8	**1**	3	**1**	0	**5**	17
04:30 PM	0	**3**	**1**	0	4	**1**	0	0	0	1	2	6	0	0	8	0	1	0	0	1	14
04:45 PM	0	0	0	0	0	0	1	0	0	1	2	7	0	0	9	0	**4**	0	0	4	14
Total Volume	0	5	1	3	9	1	2	0	0	3	8	32	0	0	40	1	10	1	0	12	64
% App. Total	0	55.6	11.1	33.3		33.3	66.7	0	0		20	80	0	0		8.3	83.3	8.3	0		
PHF	.000	.417	.250	.375	.563	.250	.500	.000	.000	.750	.667	.667	.000	.000	.667	.250	.625	.250	.000	.600	.842

SW 152nd Street & SW 112nd Avenue

File Name : SW 152nd Street & SW 112nd Avenue
Site Code : 00000000
Start Date : 5/24/2016
Page No : 8

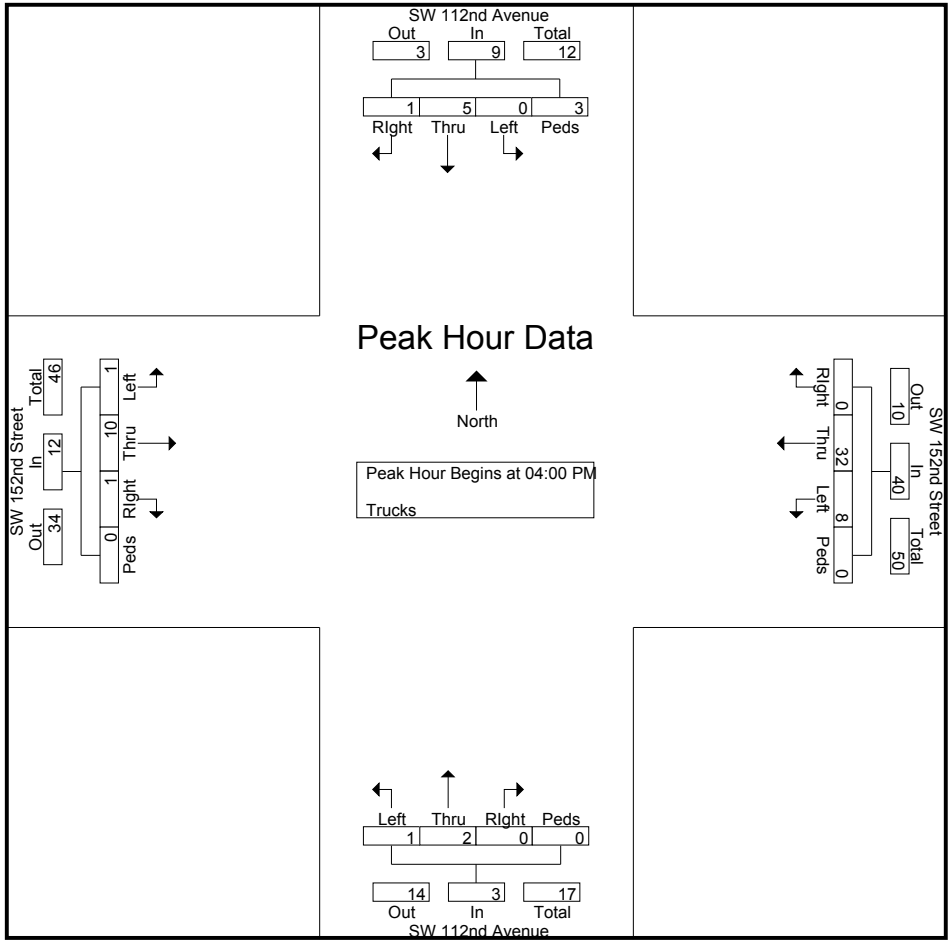

SW 152nd Street & SW 112nd Avenue

File Name : SW 152nd Street & SW 112nd Avenue
Site Code : 00000000
Start Date : 5/24/2016
Page No : 1

Groups Printed- Turns

	SW 112nd Avenue Southbound					SW 112nd Avenue Northbound					SW 152nd Street Westbound					SW 152nd Street Eastbound					
Start Time	Left	Thru	RIght	Peds/Bike	App. Total	Left	Thru	RIght	Peds/Bike	App. Total	Left	Thru	RIght	Peds/Bike	App. Total	Left	Thru	RIght	Peds/Bike	App. Total	Int. Total
07:00 AM	1	0	0	0	1	0	0	0	0	0	0	0	0	0	0	0	0	0	0	0	1
*** BREAK ***																					
Total	1	0	0	0	1	0	0	0	0	0	0	0	0	0	0	0	0	0	0	0	1
*** BREAK ***																					
08:15 AM	1	0	0	0	1	0	0	0	0	0	0	0	0	0	0	0	0	0	0	0	1
08:30 AM	0	0	0	0	0	0	0	0	0	0	0	0	0	0	0	1	0	0	0	1	1
*** BREAK ***																					
Total	1	0	0	0	1	0	0	0	0	0	0	0	0	0	0	1	0	0	0	1	2
*** BREAK ***																					
12:15 PM	0	0	0	0	0	1	0	0	0	1	0	0	0	0	0	0	0	0	0	0	1
*** BREAK ***																					
12:45 PM	1	0	0	0	1	0	0	0	0	0	0	0	0	0	0	0	0	0	0	0	1
Total	1	0	0	0	1	1	0	0	0	1	0	0	0	0	0	0	0	0	0	0	2
*** BREAK ***																					
04:15 PM	1	0	0	0	1	0	0	0	0	0	0	0	0	0	0	0	0	0	0	0	1
*** BREAK ***																					
Total	1	0	0	0	1	0	0	0	0	0	0	0	0	0	0	0	0	0	0	0	1
*** BREAK ***																					
Grand Total	4	0	0	0	4	1	0	0	0	1	0	0	0	0	0	1	0	0	0	1	6
Apprch %	100	0	0	0		100	0	0	0		0	0	0	0		100	0	0	0		
Total %	66.7	0	0	0	66.7	16.7	0	0	0	16.7	0	0	0	0	0	16.7	0	0	0	16.7	

SW 152nd Street & SW 112nd Avenue

File Name : SW 152nd Street & SW 112nd Avenue
Site Code : 00000000
Start Date : 5/24/2016
Page No : 2

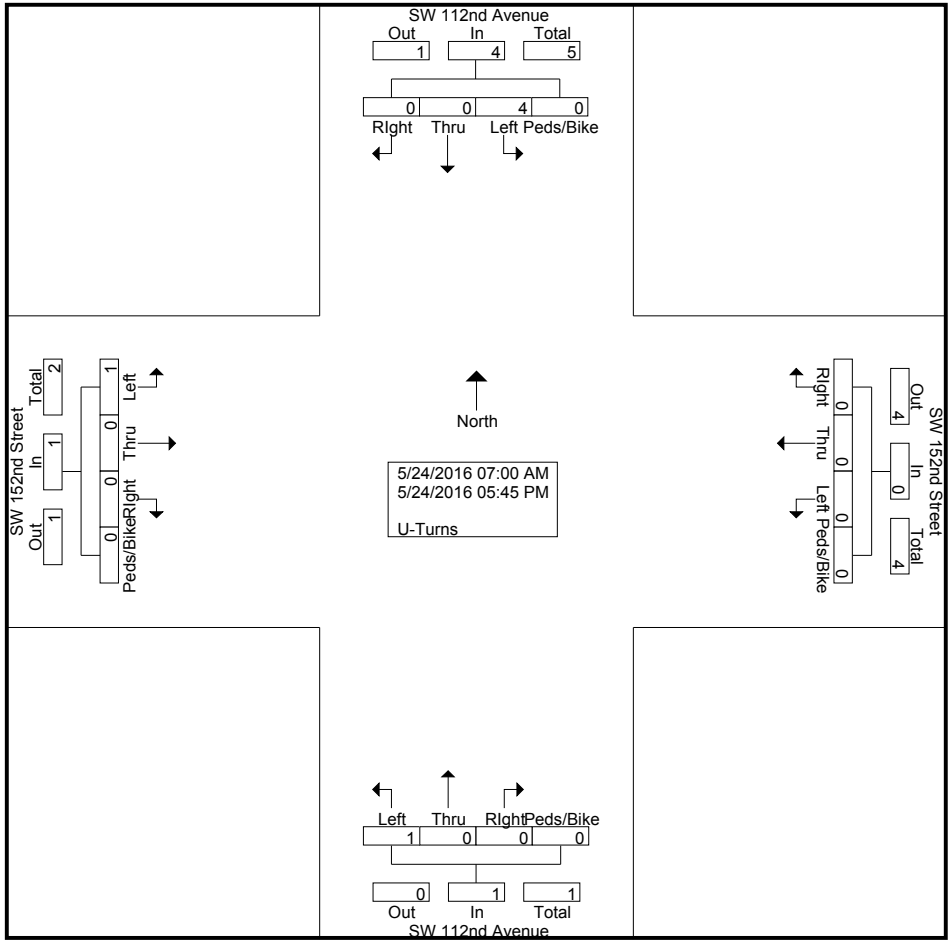

SW 152nd Street & SW 112nd Avenue

File Name : SW 152nd Street & SW 112nd Avenue
Site Code : 00000000
Start Date : 5/24/2016
Page No : 3

	SW 112nd Avenue Southbound					SW 112nd Avenue Northbound					SW 152nd Street Westbound					SW 152nd Street Eastbound					
Start Time	Left	Thru	RIght	Peds/Bike	App. Total	Left	Thru	RIght	Peds/Bike	App. Total	Left	Thru	RIght	Peds/Bike	App. Total	Left	Thru	RIght	Peds/Bike	App. Total	Int. Total
Peak Hour Analysis From 07:00 AM to 08:45 AM - Peak 1 of 1																					
Peak Hour for Entire Intersection Begins at 07:45 AM																					
07:45 AM	0	0	0	0	0	0	0	0	0	0	0	0	0	0	0	0	0	0	0	0	0
08:00 AM	0	0	0	0	0	0	0	0	0	0	0	0	0	0	0	0	0	0	0	0	0
08:15 AM	**1**	0	0	0	**1**	0	0	0	0	0	0	0	0	0	0	0	0	0	0	0	**1**
08:30 AM	0	0	0	0	0	0	0	0	0	0	0	0	0	0	0	**1**	0	0	0	**1**	1
Total Volume	1	0	0	0	1	0	0	0	0	0	0	0	0	0	0	1	0	0	0	1	2
% App. Total	100	0	0	0		0	0	0	0		0	0	0	0		100	0	0	0		
PHF	.250	.000	.000	.000	.250	.000	.000	.000	.000	.000	.000	.000	.000	.000	.000	.250	.000	.000	.000	.250	.500

SW 152nd Street & SW 112nd Avenue

File Name : SW 152nd Street & SW 112nd Avenue
Site Code : 00000000
Start Date : 5/24/2016
Page No : 4

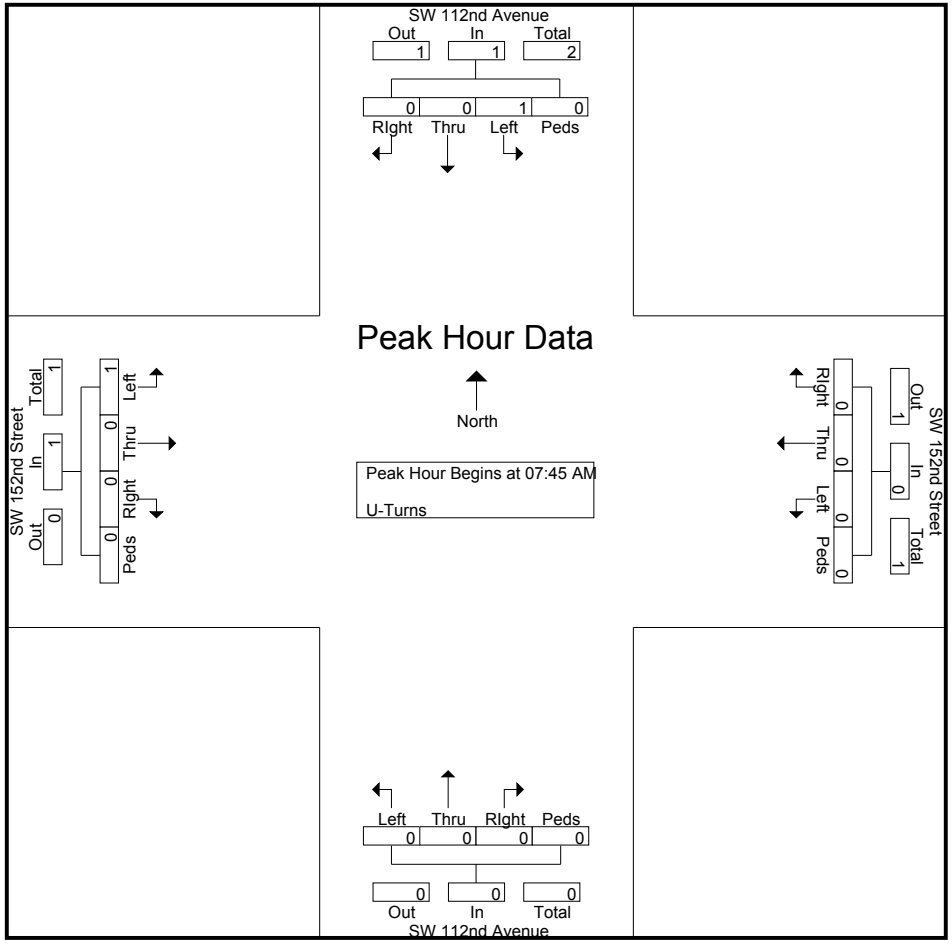

SW 152nd Street & SW 112nd Avenue

File Name : SW 152nd Street & SW 112nd Avenue
Site Code : 00000000
Start Date : 5/24/2016
Page No : 5

	SW 112nd Avenue Southbound					SW 112nd Avenue Northbound					SW 152nd Street Westbound					SW 152nd Street Eastbound					
Start Time	Left	Thru	RIght	Peds/Bike	App. Total	Left	Thru	RIght	Peds/Bike	App. Total	Left	Thru	RIght	Peds/Bike	App. Total	Left	Thru	RIght	Peds/Bike	App. Total	Int. Total
Peak Hour Analysis From 11:00 AM to 12:45 PM - Peak 1 of 1																					
Peak Hour for Entire Intersection Begins at 12:00 PM																					
12:00 PM	0	0	0	0	0	0	0	0	0	0	0	0	0	0	0	0	0	0	0	0	0
12:15 PM	0	0	0	0	0	**1**	0	0	0	**1**	0	0	0	0	0	0	0	0	0	0	**1**
12:30 PM	0	0	0	0	0	0	0	0	0	0	0	0	0	0	0	0	0	0	0	0	0
12:45 PM	**1**	0	0	0	**1**	0	0	0	0	0	0	0	0	0	0	0	0	0	0	0	1
Total Volume	1	0	0	0	1	1	0	0	0	1	0	0	0	0	0	0	0	0	0	0	2
% App. Total	100	0	0	0		100	0	0	0		0	0	0	0		0	0	0	0		
PHF	.250	.000	.000	.000	.250	.250	.000	.000	.000	.250	.000	.000	.000	.000	.000	.000	.000	.000	.000	.000	.500

SW 152nd Street & SW 112nd Avenue

File Name : SW 152nd Street & SW 112nd Avenue
Site Code : 00000000
Start Date : 5/24/2016
Page No : 6

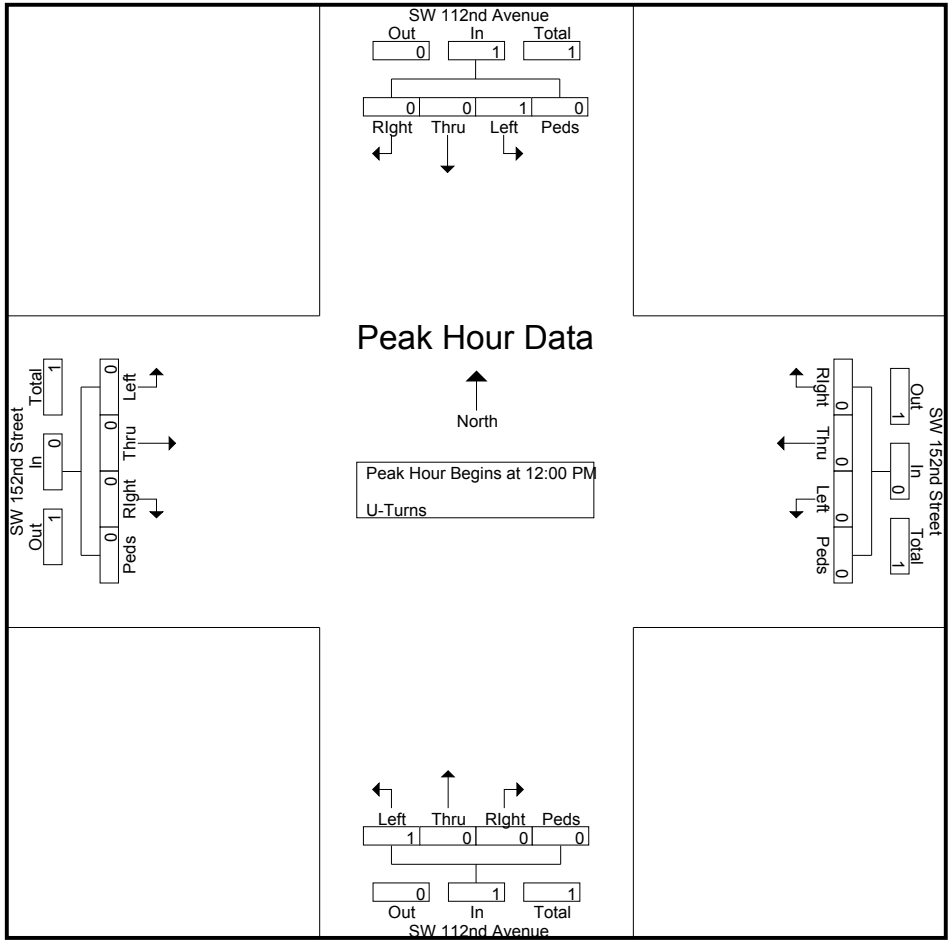

SW 152nd Street & SW 112nd Avenue

File Name : SW 152nd Street & SW 112nd Avenue
Site Code : 00000000
Start Date : 5/24/2016
Page No : 7

	SW 112nd Avenue Southbound					SW 112nd Avenue Northbound					SW 152nd Street Westbound					SW 152nd Street Eastbound					
Start Time	Left	Thru	RIght	Peds/Bike	App. Total	Left	Thru	RIght	Peds/Bike	App. Total	Left	Thru	RIght	Peds/Bike	App. Total	Left	Thru	RIght	Peds/Bike	App. Total	Int. Total
Peak Hour Analysis From 04:00 PM to 05:45 PM - Peak 1 of 1																					
Peak Hour for Entire Intersection Begins at 04:00 PM																					
04:00 PM	0	0	0	0	0	0	0	0	0	0	0	0	0	0	0	0	0	0	0	0	0
04:15 PM	**1**	0	0	0	**1**	0	0	0	0	0	0	0	0	0	0	0	0	0	0	0	**1**
04:30 PM	0	0	0	0	0	0	0	0	0	0	0	0	0	0	0	0	0	0	0	0	0
04:45 PM	0	0	0	0	0	0	0	0	0	0	0	0	0	0	0	0	0	0	0	0	0
Total Volume	1	0	0	0	1	0	0	0	0	0	0	0	0	0	0	0	0	0	0	0	1
% App. Total	100	0	0	0		0	0	0	0		0	0	0	0		0	0	0	0		
PHF	.250	.000	.000	.000	.250	.000	.000	.000	.000	.000	.000	.000	.000	.000	.000	.000	.000	.000	.000	.000	.250

SW 152nd Street & SW 112nd Avenue

File Name : SW 152nd Street & SW 112nd Avenue
Site Code : 00000000
Start Date : 5/24/2016
Page No : 8

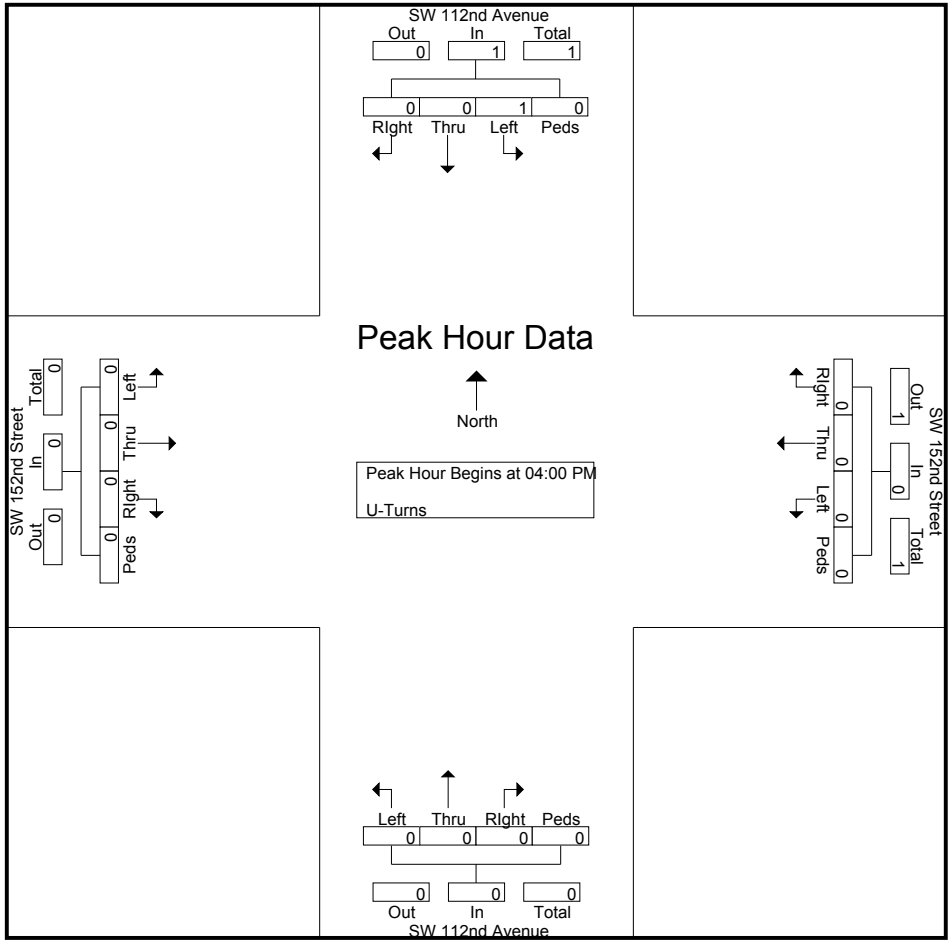

SW 152nd Street & SW 112nd Avenue

File Name : SW 152nd Street & SW 112nd Avenue
Site Code : 00000000
Start Date : 5/24/2016
Page No : 1

Groups Printed- Veh - Trucks - Turns

	SW 112nd Avenue Southbound					SW 112nd Avenue Northbound					SW 152nd Street Westbound					SW 152nd Street Eastbound					
Start Time	Left	Thru	RIght	Peds/Bike	App. Total	Left	Thru	RIght	Peds/Bike	App. Total	Left	Thru	RIght	Peds/Bike	App. Total	Left	Thru	RIght	Peds/Bike	App. Total	Int. Total
07:00 AM	23	44	17	2	86	74	89	32	0	195	26	254	23	0	303	17	230	33	0	280	864
07:15 AM	17	58	37	1	113	104	109	23	0	236	18	245	24	0	287	23	201	29	0	253	889
07:30 AM	20	52	20	2	94	78	84	21	0	183	26	235	24	0	285	49	207	32	0	288	850
07:45 AM	22	51	40	1	114	90	88	14	0	192	20	215	23	0	258	57	176	28	0	261	825
Total	82	205	114	6	407	346	370	90	0	806	90	949	94	0	1133	146	814	122	0	1082	3428
08:00 AM	30	57	46	1	134	94	97	26	0	217	19	209	16	0	244	43	222	25	0	290	885
08:15 AM	21	55	38	2	116	85	101	27	0	213	20	183	16	1	220	45	240	39	0	324	873
08:30 AM	13	49	21	3	86	69	76	42	0	187	32	229	16	0	277	23	279	33	0	335	885
08:45 AM	34	52	22	2	110	73	69	39	0	181	23	174	17	2	216	13	284	47	0	344	851
Total	98	213	127	8	446	321	343	134	0	798	94	795	65	3	957	124	1025	144	0	1293	3494
*** BREAK ***																					
11:00 AM	35	44	17	0	96	63	51	20	0	134	15	217	27	0	259	22	206	62	0	290	779
11:15 AM	29	50	16	2	97	48	40	17	0	105	19	193	10	0	222	16	186	34	3	239	663
11:30 AM	24	43	12	3	82	49	44	10	0	103	15	187	20	1	223	16	185	30	0	231	639
11:45 AM	30	63	13	5	111	57	47	14	0	118	7	218	12	0	237	15	184	33	0	232	698
Total	118	200	58	10	386	217	182	61	0	460	56	815	69	1	941	69	761	159	3	992	2779
12:00 PM	26	51	22	6	105	61	33	15	0	109	12	188	15	0	215	14	199	39	0	252	681
12:15 PM	30	59	16	5	110	47	54	16	0	117	17	198	15	0	230	22	197	42	0	261	718
12:30 PM	30	62	14	1	107	48	36	14	0	98	20	214	20	0	254	24	221	48	0	293	752
12:45 PM	30	55	17	1	103	53	57	14	0	124	12	205	14	1	232	12	195	50	0	257	716
Total	116	227	69	13	425	209	180	59	0	448	61	805	64	1	931	72	812	179	0	1063	2867
*** BREAK ***																					
04:00 PM	26	62	13	1	102	46	44	12	0	102	53	293	13	0	359	14	178	68	0	260	823
04:15 PM	24	57	14	2	97	57	63	19	0	139	47	316	16	0	379	18	189	71	0	278	893
04:30 PM	22	59	18	1	100	54	44	13	0	111	44	287	11	0	342	10	174	50	0	234	787
04:45 PM	24	62	15	1	102	48	55	11	0	114	46	291	14	0	351	11	155	64	0	230	797
Total	96	240	60	5	401	205	206	55	0	466	190	1187	54	0	1431	53	696	253	0	1002	3300
05:00 PM	18	62	16	1	97	53	43	14	0	110	56	323	15	1	395	22	191	62	0	275	877
05:15 PM	15	62	12	5	94	60	52	11	0	123	48	319	24	0	391	17	173	65	0	255	863
05:30 PM	8	75	18	1	102	45	48	8	0	101	56	318	10	0	384	25	159	77	0	261	848
05:45 PM	21	65	19	0	105	52	65	14	0	131	56	330	12	0	398	20	172	60	0	252	886
Total	62	264	65	7	398	210	208	47	0	465	216	1290	61	1	1568	84	695	264	0	1043	3474
Grand Total	572	1349	493	49	2463	1508	1489	446	0	3443	707	5841	407	6	6961	548	4803	1121	3	6475	19342
Apprch %	23.2	54.8	20	2		43.8	43.2	13	0		10.2	83.9	5.8	0.1		8.5	74.2	17.3	0		
Total %	3	7	2.5	0.3	12.7	7.8	7.7	2.3	0	17.8	3.7	30.2	2.1	0	36	2.8	24.8	5.8	0	33.5	
Veh	566	1323	483	28	2400	1473	1465	445	0	3383	693	5667	398	1	6759	537	4698	1103	2	6340	18882
% Veh	99	98.1	98	57.1	97.4	97.7	98.4	99.8	0	98.3	98	97	97.8	16.7	97.1	98	97.8	98.4	66.7	97.9	97.6
Trucks	2	26	10	21	59	34	24	1	0	59	14	174	9	5	202	10	105	18	1	134	454
% Trucks	0.3	1.9	2	42.9	2.4	2.3	1.6	0.2	0	1.7	2	3	2.2	83.3	2.9	1.8	2.2	1.6	33.3	2.1	2.3

SW 152nd Street & SW 112nd Avenue

File Name : SW 152nd Street & SW 112nd Avenue
Site Code : 00000000
Start Date : 5/24/2016
Page No : 2

Groups Printed- Veh - Trucks - Turns

	SW 112nd Avenue Southbound					SW 112nd Avenue Northbound					SW 152nd Street Westbound					SW 152nd Street Eastbound					
	Left	Thru	RIght	Peds/Bike	App. Total	Left	Thru	RIght	Peds/Bike	App. Total	Left	Thru	RIght	Peds/Bike	App. Total	Left	Thru	RIght	Peds/Bike	App. Total	Int. Total
U-Turns	4	0	0	0	4	1	0	0	0	1	0	0	0	0	0	1	0	0	0	1	6
% U-Turns	0.7	0	0	0	0.2	0.1	0	0	0	0	0	0	0	0	0	0.2	0	0	0	0	0

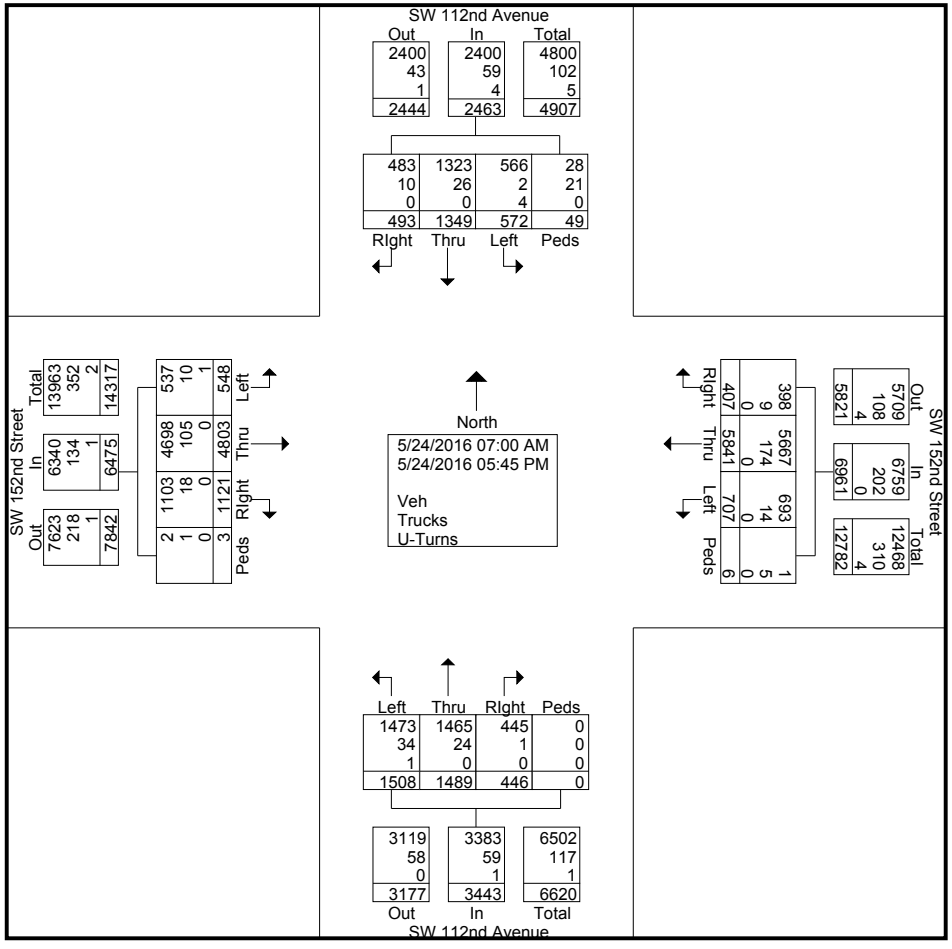

SW 152nd Street & SW 112nd Avenue

File Name : SW 152nd Street & SW 112nd Avenue
Site Code : 00000000
Start Date : 5/24/2016
Page No : 3

	SW 112nd Avenue Southbound					SW 112nd Avenue Northbound					SW 152nd Street Westbound					SW 152nd Street Eastbound					
Start Time	Left	Thru	RIght	Peds/Bike	App. Total	Left	Thru	RIght	Peds/Bike	App. Total	Left	Thru	RIght	Peds/Bike	App. Total	Left	Thru	RIght	Peds/Bike	App. Total	Int. Total
Peak Hour Analysis From 07:00 AM to 08:45 AM - Peak 1 of 1																					
Peak Hour for Entire Intersection Begins at 08:00 AM																					
08:00 AM	30	**57**	**46**	1	**134**	**94**	97	26	0	**217**	19	209	16	0	244	43	222	25	0	290	**885**
08:15 AM	21	55	38	2	116	85	**101**	27	0	213	20	183	16	1	220	**45**	240	39	0	324	873
08:30 AM	13	49	21	**3**	86	69	76	**42**	0	187	**32**	**229**	16	0	**277**	23	279	33	0	335	885
08:45 AM	**34**	52	22	2	110	73	69	39	0	181	23	174	**17**	**2**	216	13	**284**	**47**	0	**344**	851
Total Volume	98	213	127	8	446	321	343	134	0	798	94	795	65	3	957	124	1025	144	0	1293	3494
% App. Total	22	47.8	28.5	1.8		40.2	43	16.8	0		9.8	83.1	6.8	0.3		9.6	79.3	11.1	0		
PHF	.721	.934	.690	.667	.832	.854	.849	.798	.000	.919	.734	.868	.956	.375	.864	.689	.902	.766	.000	.940	.987

SW 152nd Street & SW 112nd Avenue

File Name : SW 152nd Street & SW 112nd Avenue
Site Code : 00000000
Start Date : 5/24/2016
Page No : 4

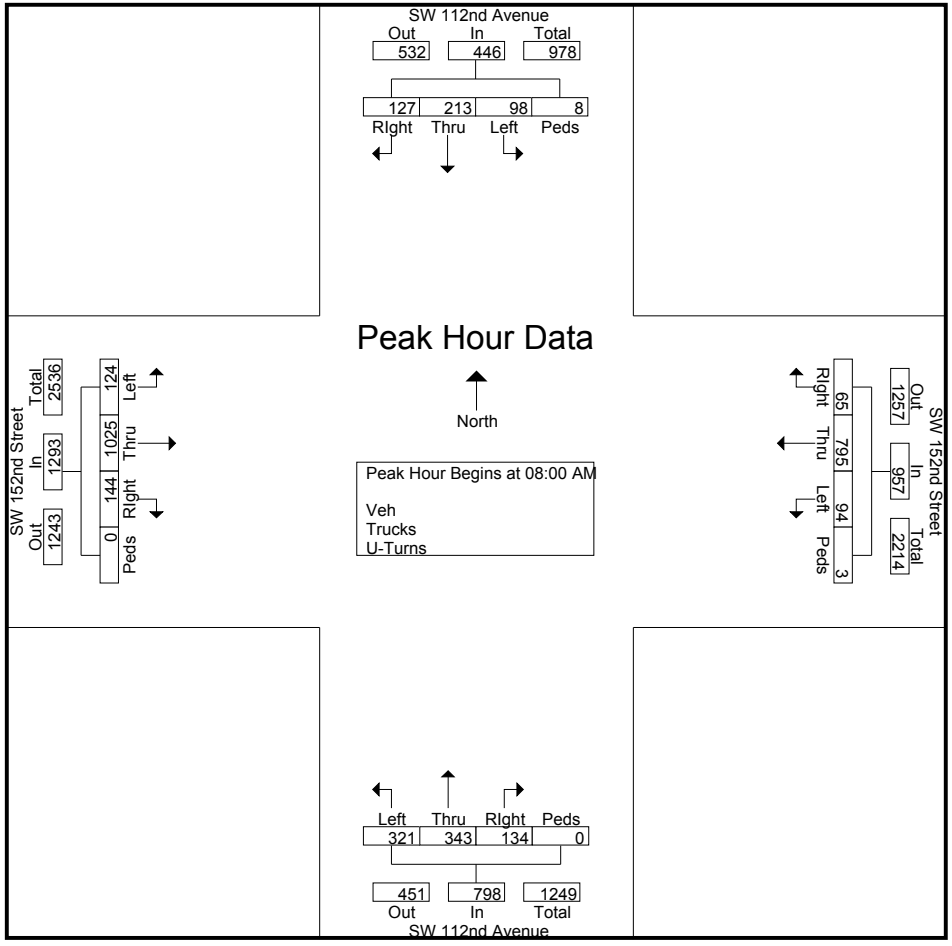

SW 152nd Street & SW 112nd Avenue

File Name : SW 152nd Street & SW 112nd Avenue
Site Code : 00000000
Start Date : 5/24/2016
Page No : 5

	SW 112nd Avenue Southbound					SW 112nd Avenue Northbound					SW 152nd Street Westbound					SW 152nd Street Eastbound					
Start Time	Left	Thru	RIght	Peds/Bike	App. Total	Left	Thru	RIght	Peds/Bike	App. Total	Left	Thru	RIght	Peds/Bike	App. Total	Left	Thru	RIght	Peds/Bike	App. Total	Int. Total
Peak Hour Analysis From 11:00 AM to 12:45 PM - Peak 1 of 1																					
Peak Hour for Entire Intersection Begins at 12:00 PM																					
12:00 PM	26	51	**22**	**6**	105	**61**	33	15	0	109	12	188	15	0	215	14	199	39	0	252	681
12:15 PM	**30**	59	16	5	**110**	47	54	**16**	0	117	17	198	15	0	230	22	197	42	0	261	718
12:30 PM	30	**62**	14	1	107	48	36	14	0	98	**20**	**214**	**20**	0	**254**	**24**	**221**	48	0	**293**	**752**
12:45 PM	30	55	17	1	103	53	**57**	14	0	**124**	12	205	14	**1**	232	12	195	**50**	0	257	716
Total Volume	116	227	69	13	425	209	180	59	0	448	61	805	64	1	931	72	812	179	0	1063	2867
% App. Total	27.3	53.4	16.2	3.1		46.7	40.2	13.2	0		6.6	86.5	6.9	0.1		6.8	76.4	16.8	0		
PHF	.967	.915	.784	.542	.966	.857	.789	.922	.000	.903	.763	.940	.800	.250	.916	.750	.919	.895	.000	.907	.953

SW 152nd Street & SW 112nd Avenue

File Name : SW 152nd Street & SW 112nd Avenue
Site Code : 00000000
Start Date : 5/24/2016
Page No : 6

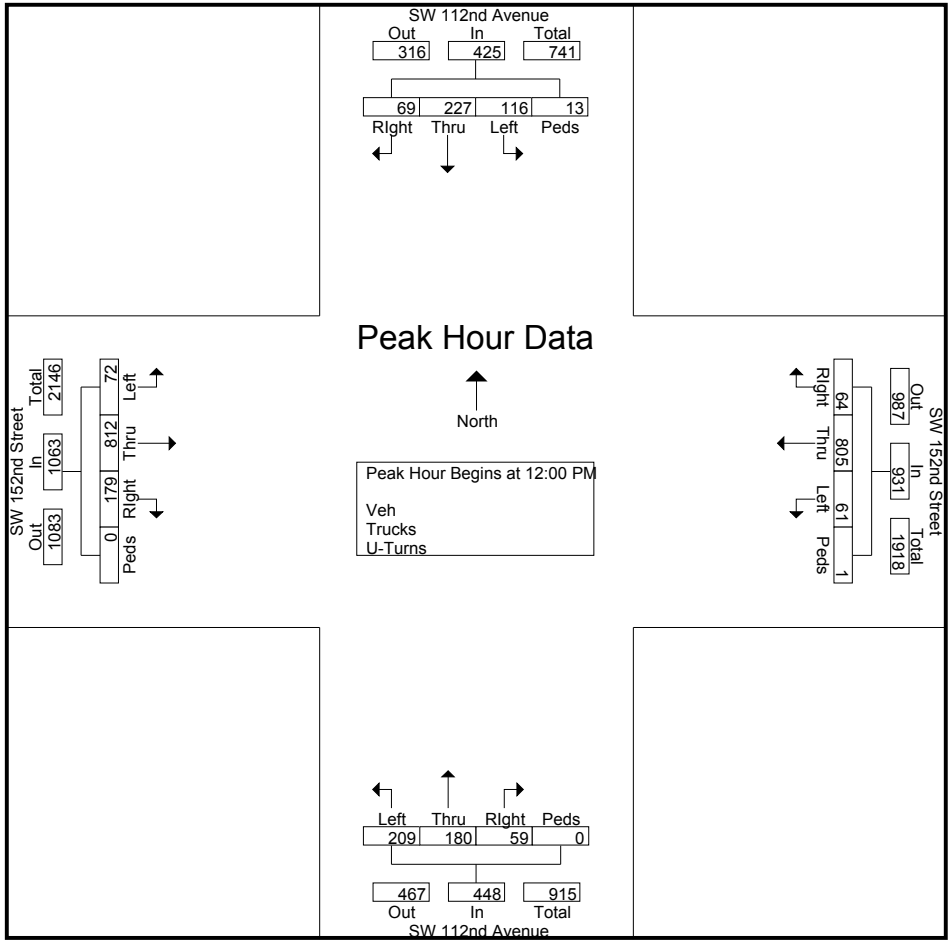

SW 152nd Street & SW 112nd Avenue

File Name : SW 152nd Street & SW 112nd Avenue
Site Code : 00000000
Start Date : 5/24/2016
Page No : 7

	SW 112nd Avenue Southbound					SW 112nd Avenue Northbound					SW 152nd Street Westbound					SW 152nd Street Eastbound					
Start Time	Left	Thru	RIght	Peds/Bike	App. Total	Left	Thru	RIght	Peds/Bike	App. Total	Left	Thru	RIght	Peds/Bike	App. Total	Left	Thru	RIght	Peds/Bike	App. Total	Int. Total
Peak Hour Analysis From 04:00 PM to 05:45 PM - Peak 1 of 1																					
Peak Hour for Entire Intersection Begins at 05:00 PM																					
05:00 PM	18	62	16	1	97	53	43	**14**	0	110	**56**	323	15	**1**	395	22	**191**	62	0	**275**	877
05:15 PM	15	62	12	**5**	94	**60**	52	11	0	123	48	319	**24**	0	391	17	173	65	0	255	863
05:30 PM	8	**75**	18	1	102	45	48	8	0	101	56	318	10	0	384	**25**	159	**77**	0	261	848
05:45 PM	**21**	65	**19**	0	**105**	52	**65**	14	0	**131**	56	**330**	12	0	**398**	20	172	60	0	252	**886**
Total Volume	62	264	65	7	398	210	208	47	0	465	216	1290	61	1	1568	84	695	264	0	1043	3474
% App. Total	15.6	66.3	16.3	1.8		45.2	44.7	10.1	0		13.8	82.3	3.9	0.1		8.1	66.6	25.3	0		
PHF	.738	.880	.855	.350	.948	.875	.800	.839	.000	.887	.964	.977	.635	.250	.985	.840	.910	.857	.000	.948	.980

SW 152nd Street & SW 112nd Avenue

File Name : SW 152nd Street & SW 112nd Avenue
Site Code : 00000000
Start Date : 5/24/2016
Page No : 8

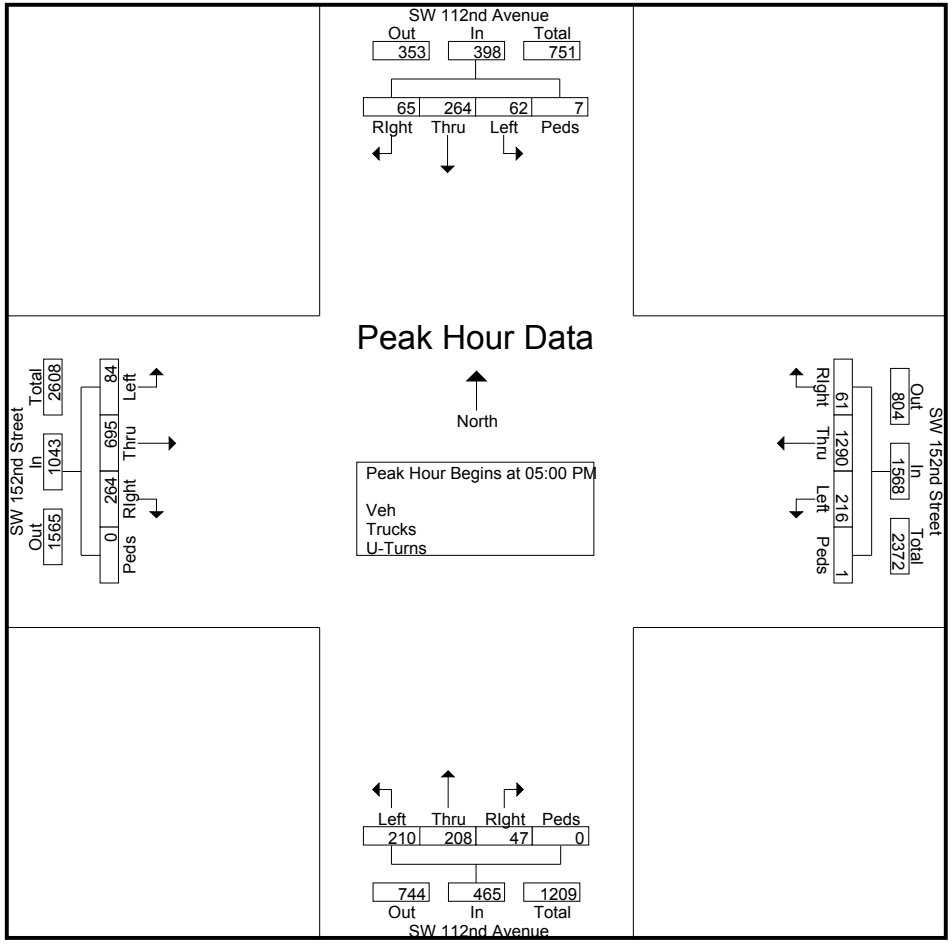

SW 152nd Street & Turnpike Ramp East

File Name : SW 152nd Street & Turnpike Ramp East
Site Code : 00000000
Start Date : 5/24/2016
Page No : 1

Groups Printed- Trucks

	SW 157th Avenue Southbound					SW 157th Avenue Northbound					SW 152nd Street Westbound					SW 152nd Street Eastbound					
Start Time	Left	Thru	RIght	Bikes	App. Total	Left	Thru	RIght	Bikes	App. Total	Left	Thru	RIght	Bikes	App. Total	Left	Thru	RIght	Bikes	App. Total	Int. Total
07:00 AM	0	0	0	0	0	0	0	0	2	2	0	2	1	0	3	0	1	0	0	1	6
07:15 AM	0	0	0	0	0	1	0	0	0	1	0	4	0	0	4	1	2	0	0	3	8
07:30 AM	0	0	0	0	0	0	0	0	2	2	0	5	1	0	6	1	5	0	0	6	14
07:45 AM	0	0	0	0	0	0	0	1	0	1	0	3	1	0	4	0	10	0	0	10	15
Total	0	0	0	0	0	1	0	1	4	6	0	14	3	0	17	2	18	0	0	20	43
08:00 AM	0	0	0	0	0	2	0	0	1	3	0	5	3	0	8	2	3	0	0	5	16
08:15 AM	0	0	0	0	0	1	0	0	0	1	0	4	4	0	8	2	9	0	0	11	20
08:30 AM	0	0	0	0	0	2	0	5	1	8	0	11	4	0	15	1	5	0	0	6	29
08:45 AM	0	0	0	0	0	0	0	0	1	1	0	5	4	0	9	4	7	0	0	11	21
Total	0	0	0	0	0	5	0	5	3	13	0	25	15	0	40	9	24	0	0	33	86
*** BREAK ***																					
11:00 AM	0	0	0	0	0	0	1	1	0	2	0	6	6	0	12	2	6	0	0	8	22
11:15 AM	0	0	0	0	0	0	0	2	0	2	0	11	7	0	18	1	8	0	0	9	29
11:30 AM	0	0	0	0	0	1	0	4	1	6	0	5	4	0	9	2	2	0	0	4	19
11:45 AM	0	0	0	0	0	0	0	1	0	1	0	3	6	0	9	0	6	0	0	6	16
Total	0	0	0	0	0	1	1	8	1	11	0	25	23	0	48	5	22	0	0	27	86
12:00 PM	0	0	0	0	0	0	0	2	0	2	0	3	8	0	11	2	5	0	0	7	20
12:15 PM	0	0	0	0	0	0	0	1	0	1	0	4	3	0	7	0	4	0	0	4	12
12:30 PM	0	0	0	0	0	0	0	1	0	1	0	8	3	0	11	0	4	0	0	4	16
12:45 PM	0	0	0	0	0	1	0	1	0	2	0	5	3	0	8	0	5	0	0	5	15
Total	0	0	0	0	0	1	0	5	0	6	0	20	17	0	37	2	18	0	0	20	63
*** BREAK ***																					
04:00 PM	0	0	0	0	0	2	1	0	0	3	1	6	3	0	10	1	1	0	0	2	15
04:15 PM	0	0	0	0	0	4	0	0	3	7	0	5	5	1	11	2	4	0	0	6	24
04:30 PM	0	0	0	0	0	6	0	0	0	6	0	6	2	0	8	0	2	0	0	2	16
04:45 PM	0	0	0	0	0	3	1	0	0	4	0	4	1	0	5	2	4	0	0	6	15
Total	0	0	0	0	0	15	2	0	3	20	1	21	11	1	34	5	11	0	0	16	70
05:00 PM	0	0	0	0	0	1	0	1	0	2	0	6	3	0	9	0	2	0	0	2	13
05:15 PM	0	0	0	0	0	1	2	0	0	3	0	2	0	0	2	1	0	0	0	1	6
05:30 PM	0	0	0	0	0	2	0	0	2	4	0	2	4	0	6	0	1	0	0	1	11
05:45 PM	0	0	0	0	0	0	1	0	1	2	0	2	3	0	5	0	2	0	0	2	9
Total	0	0	0	0	0	4	3	1	3	11	0	12	10	0	22	1	5	0	0	6	39
Grand Total	0	0	0	0	0	27	6	20	14	67	1	117	79	1	198	24	98	0	0	122	387
Apprch %	0	0	0	0		40.3	9	29.9	20.9		0.5	59.1	39.9	0.5		19.7	80.3	0	0		
Total %	0	0	0	0	0	7	1.6	5.2	3.6	17.3	0.3	30.2	20.4	0.3	51.2	6.2	25.3	0	0	31.5	

SW 152nd Street & Turnpike Ramp East

File Name : SW 152nd Street & Turnpike Ramp East
Site Code : 00000000
Start Date : 5/24/2016
Page No : 2

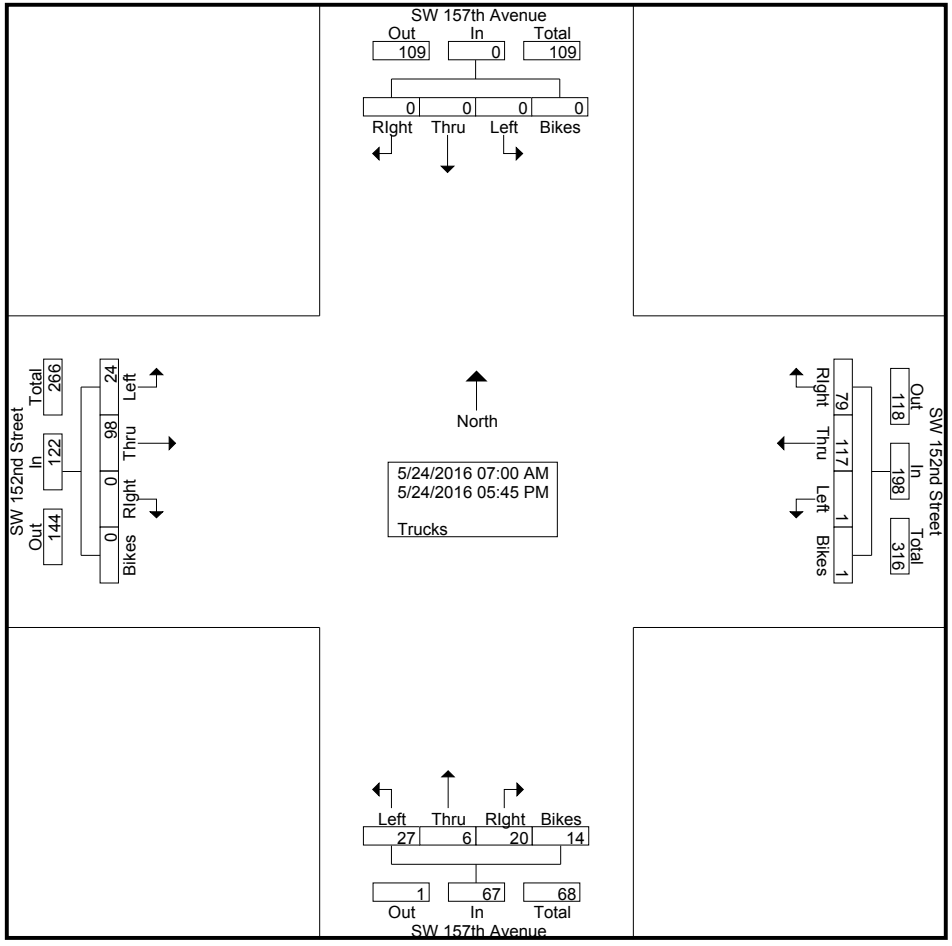

SW 152nd Street & Turnpike Ramp East

File Name : SW 152nd Street & Turnpike Ramp East
Site Code : 00000000
Start Date : 5/24/2016
Page No : 3

	SW 157th Avenue Southbound					SW 157th Avenue Northbound					SW 152nd Street Westbound					SW 152nd Street Eastbound					
Start Time	Left	Thru	RIght	Bikes	App. Total	Left	Thru	RIght	Bikes	App. Total	Left	Thru	RIght	Bikes	App. Total	Left	Thru	RIght	Bikes	App. Total	Int. Total
Peak Hour Analysis From 07:00 AM to 08:45 AM - Peak 1 of 1																					
Peak Hour for Entire Intersection Begins at 08:00 AM																					
08:00 AM	0	0	0	0	0	**2**	0	0	**1**	3	0	5	3	0	8	2	3	0	0	5	16
08:15 AM	0	0	0	0	0	1	0	0	0	1	0	4	**4**	0	8	2	**9**	0	0	**11**	20
08:30 AM	0	0	0	0	0	2	0	**5**	1	**8**	0	**11**	4	0	**15**	1	5	0	0	6	**29**
08:45 AM	0	0	0	0	0	0	0	0	1	1	0	5	4	0	9	**4**	7	0	0	11	21
Total Volume	0	0	0	0	0	5	0	5	3	13	0	25	15	0	40	9	24	0	0	33	86
% App. Total	0	0	0	0		38.5	0	38.5	23.1		0	62.5	37.5	0		27.3	72.7	0	0		
PHF	.000	.000	.000	.000	.000	.625	.000	.250	.750	.406	.000	.568	.938	.000	.667	.563	.667	.000	.000	.750	.741

SW 152nd Street & Turnpike Ramp East

File Name : SW 152nd Street & Turnpike Ramp East
Site Code : 00000000
Start Date : 5/24/2016
Page No : 4

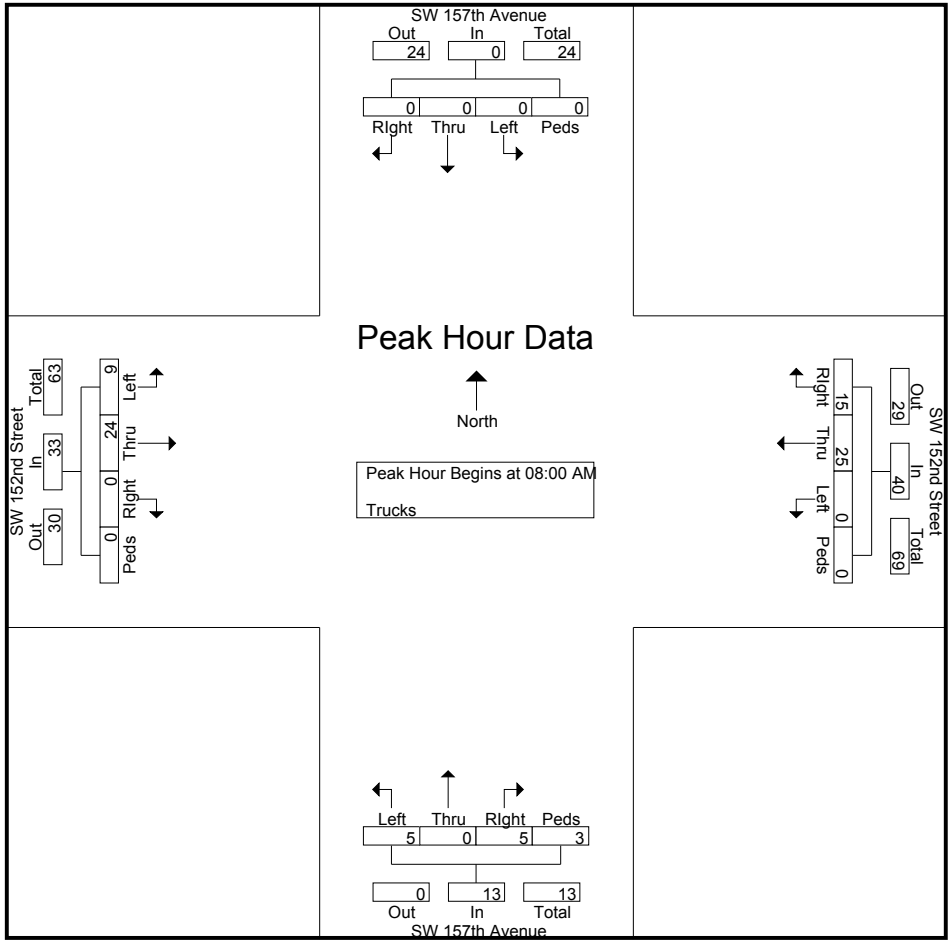

SW 152nd Street & Turnpike Ramp East

File Name : SW 152nd Street & Turnpike Ramp East
Site Code : 00000000
Start Date : 5/24/2016
Page No : 5

	SW 157th Avenue Southbound					SW 157th Avenue Northbound					SW 152nd Street Westbound					SW 152nd Street Eastbound					
Start Time	Left	Thru	RIght	Bikes	App. Total	Left	Thru	RIght	Bikes	App. Total	Left	Thru	RIght	Bikes	App. Total	Left	Thru	RIght	Bikes	App. Total	Int. Total
Peak Hour Analysis From 11:00 AM to 12:45 PM - Peak 1 of 1																					
Peak Hour for Entire Intersection Begins at 11:00 AM																					
11:00 AM	0	0	0	0	0	0	**1**	1	0	2	0	6	6	0	12	**2**	6	0	0	8	22
11:15 AM	0	0	0	0	0	0	0	2	0	2	0	**11**	**7**	0	**18**	1	**8**	0	0	**9**	**29**
11:30 AM	0	0	0	0	0	**1**	0	**4**	**1**	**6**	0	5	4	0	9	2	2	0	0	4	19
11:45 AM	0	0	0	0	0	0	0	1	0	1	0	3	6	0	9	0	6	0	0	6	16
Total Volume	0	0	0	0	0	1	1	8	1	11	0	25	23	0	48	5	22	0	0	27	86
% App. Total	0	0	0	0		9.1	9.1	72.7	9.1		0	52.1	47.9	0		18.5	81.5	0	0		
PHF	.000	.000	.000	.000	.000	.250	.250	.500	.250	.458	.000	.568	.821	.000	.667	.625	.688	.000	.000	.750	.741

SW 152nd Street & Turnpike Ramp East

File Name : SW 152nd Street & Turnpike Ramp East
Site Code : 00000000
Start Date : 5/24/2016
Page No : 6

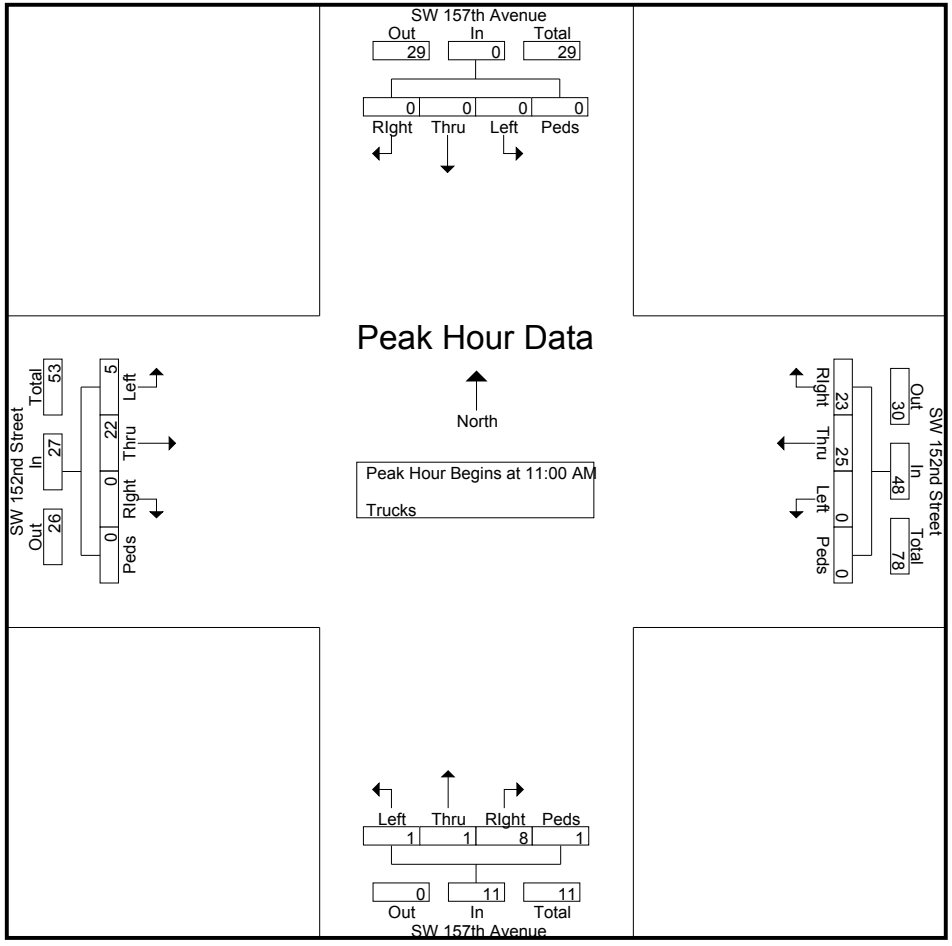

SW 152nd Street & Turnpike Ramp East

File Name : SW 152nd Street & Turnpike Ramp East
Site Code : 00000000
Start Date : 5/24/2016
Page No : 7

	SW 157th Avenue Southbound					SW 157th Avenue Northbound					SW 152nd Street Westbound					SW 152nd Street Eastbound					
Start Time	Left	Thru	RIght	Bikes	App. Total	Left	Thru	RIght	Bikes	App. Total	Left	Thru	RIght	Bikes	App. Total	Left	Thru	RIght	Bikes	App. Total	Int. Total
Peak Hour Analysis From 04:00 PM to 05:45 PM - Peak 1 of 1																					
Peak Hour for Entire Intersection Begins at 04:00 PM																					
04:00 PM	0	0	0	0	0	2	**1**	0	0	3	**1**	**6**	3	0	10	1	1	0	0	2	15
04:15 PM	0	0	0	0	0	4	0	0	**3**	**7**	0	5	**5**	**1**	**11**	**2**	**4**	0	0	**6**	**24**
04:30 PM	0	0	0	0	0	**6**	0	0	0	6	0	6	2	0	8	0	2	0	0	2	16
04:45 PM	0	0	0	0	0	3	1	0	0	4	0	4	1	0	5	2	4	0	0	6	15
Total Volume	0	0	0	0	0	15	2	0	3	20	1	21	11	1	34	5	11	0	0	16	70
% App. Total	0	0	0	0		75	10	0	15		2.9	61.8	32.4	2.9		31.2	68.8	0	0		
PHF	.000	.000	.000	.000	.000	.625	.500	.000	.250	.714	.250	.875	.550	.250	.773	.625	.688	.000	.000	.667	.729

SW 152nd Street & Turnpike Ramp East

File Name : SW 152nd Street & Turnpike Ramp East
Site Code : 00000000
Start Date : 5/24/2016
Page No : 8

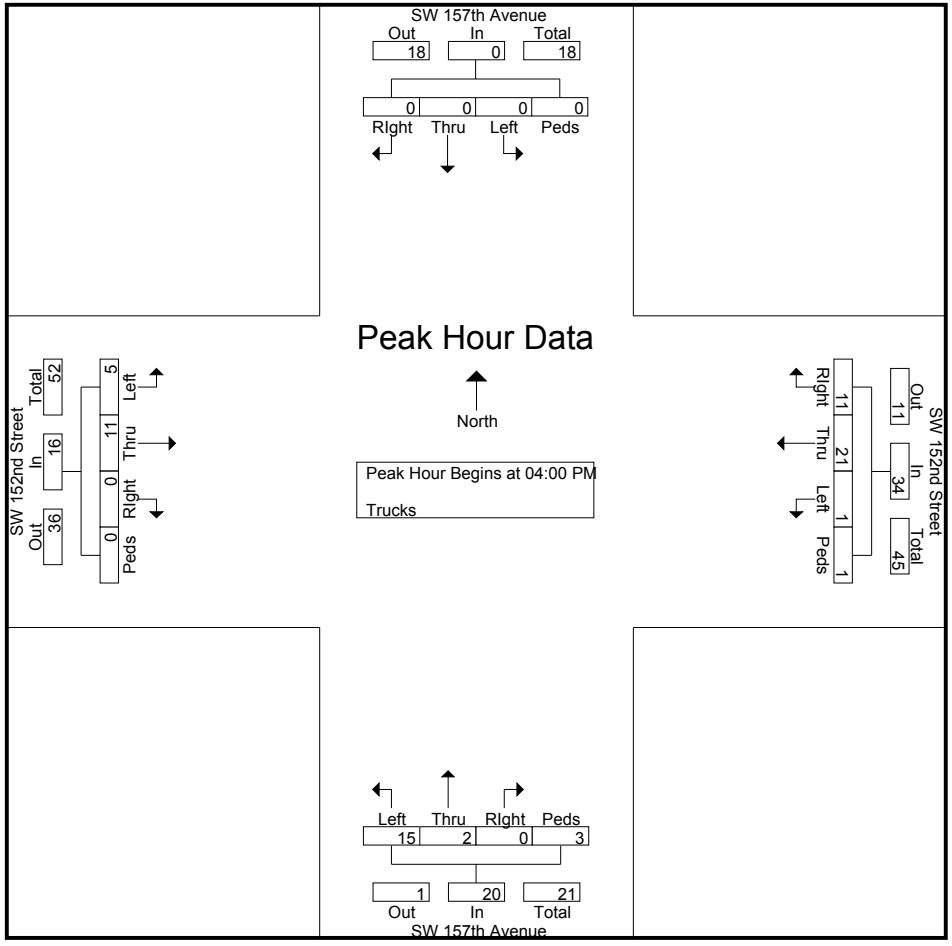

SW 152nd Street & Turnpike Ramp East

File Name : SW 152nd Street & Turnpike Ramp East
Site Code : 00000000
Start Date : 5/24/2016
Page No : 1

Groups Printed- Turns

	SW 157th Avenue Southbound					SW 157th Avenue Northbound					SW 152nd Street Westbound					SW 152nd Street Eastbound					
Start Time	Left	Thru	RIght	Peds/Bike	App. Total	Left	Thru	RIght	Peds/Bike	App. Total	Left	Thru	RIght	Peds/Bike	App. Total	Left	Thru	RIght	Peds/Bike	App. Total	Int. Total
07:00 AM	0	0	0	0	0	0	0	0	0	0	0	0	0	0	0	3	0	0	0	3	3
07:15 AM	0	0	0	0	0	0	0	0	0	0	0	0	0	0	0	1	0	0	0	1	1
*** BREAK ***																					
07:45 AM	0	0	0	0	0	0	0	0	0	0	0	0	0	0	0	3	0	0	0	3	3
Total	0	0	0	0	0	0	0	0	0	0	0	0	0	0	0	7	0	0	0	7	7
08:00 AM	0	0	0	0	0	0	0	0	0	0	0	0	0	0	0	2	0	0	0	2	2
08:15 AM	0	0	0	0	0	1	0	0	0	1	0	0	0	0	0	5	0	0	0	5	6
08:30 AM	0	0	0	0	0	0	0	0	0	0	0	0	0	0	0	2	0	0	0	2	2
08:45 AM	0	0	0	0	0	0	0	0	0	0	0	0	0	0	0	3	0	0	0	3	3
Total	0	0	0	0	0	1	0	0	0	1	0	0	0	0	0	12	0	0	0	12	13
*** BREAK ***																					
11:00 AM	0	0	0	0	0	0	0	0	0	0	0	0	0	0	0	4	0	0	0	4	4
11:15 AM	0	0	0	0	0	1	0	0	0	1	0	0	0	0	0	4	0	0	0	4	5
11:30 AM	0	0	0	0	0	0	0	0	0	0	0	0	0	0	0	4	0	0	0	4	4
11:45 AM	0	0	0	0	0	1	0	0	0	1	0	0	0	0	0	7	0	0	0	7	8
Total	0	0	0	0	0	2	0	0	0	2	0	0	0	0	0	19	0	0	0	19	21
12:00 PM	0	0	0	0	0	0	0	0	0	0	0	0	0	0	0	11	0	0	0	11	11
12:15 PM	0	0	0	0	0	0	0	0	0	0	0	0	0	0	0	6	0	0	0	6	6
12:30 PM	0	0	0	0	0	0	0	0	0	0	0	0	0	0	0	8	0	0	0	8	8
12:45 PM	0	0	0	0	0	0	0	0	0	0	0	0	0	0	0	9	0	0	0	9	9
Total	0	0	0	0	0	0	0	0	0	0	0	0	0	0	0	34	0	0	0	34	34
*** BREAK ***																					
04:00 PM	0	0	0	3	3	0	0	0	0	0	1	0	0	0	1	7	0	0	0	7	11
04:15 PM	0	0	0	0	0	0	0	0	0	0	1	0	0	0	1	3	0	0	0	3	4
04:30 PM	0	0	0	0	0	0	0	0	0	0	0	0	0	0	0	1	0	0	0	1	1
04:45 PM	0	0	0	0	0	0	0	0	0	0	0	0	0	0	0	1	0	0	0	1	1
Total	0	0	0	3	3	0	0	0	0	0	2	0	0	0	2	12	0	0	0	12	17
05:00 PM	0	0	0	0	0	0	0	0	0	0	0	0	0	0	0	2	0	0	0	2	2
05:15 PM	0	0	0	0	0	0	0	0	0	0	0	0	0	0	0	8	0	0	0	8	8
05:30 PM	0	0	0	0	0	0	0	0	0	0	0	0	0	0	0	3	0	0	0	3	3
05:45 PM	0	0	0	0	0	0	0	0	0	0	0	0	0	0	0	3	0	0	0	3	3
Total	0	0	0	0	0	0	0	0	0	0	0	0	0	0	0	16	0	0	0	16	16
Grand Total	0	0	0	3	3	3	0	0	0	3	2	0	0	0	2	100	0	0	0	100	108
Apprch %	0	0	0	100		100	0	0	0		100	0	0	0		100	0	0	0		
Total %	0	0	0	2.8	2.8	2.8	0	0	0	2.8	1.9	0	0	0	1.9	92.6	0	0	0	92.6	

SW 152nd Street & Turnpike Ramp East

File Name : SW 152nd Street & Turnpike Ramp East
Site Code : 00000000
Start Date : 5/24/2016
Page No : 2

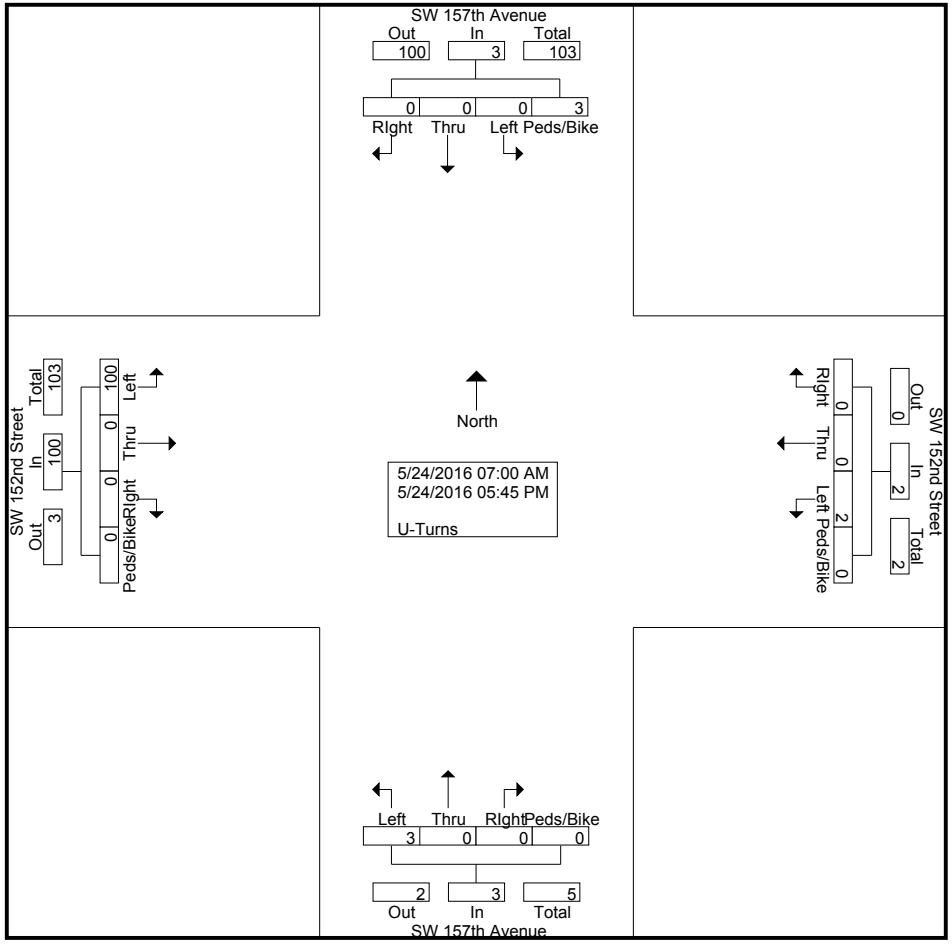

SW 152nd Street & Turnpike Ramp East

File Name : SW 152nd Street & Turnpike Ramp East
Site Code : 00000000
Start Date : 5/24/2016
Page No : 3

	SW 157th Avenue Southbound					SW 157th Avenue Northbound					SW 152nd Street Westbound					SW 152nd Street Eastbound					
Start Time	Left	Thru	RIght	Peds/Bike	App. Total	Left	Thru	RIght	Peds/Bike	App. Total	Left	Thru	RIght	Peds/Bike	App. Total	Left	Thru	RIght	Peds/Bike	App. Total	Int. Total
Peak Hour Analysis From 07:00 AM to 08:45 AM - Peak 1 of 1																					
Peak Hour for Entire Intersection Begins at 07:45 AM																					
07:45 AM	0	0	0	0	0	0	0	0	0	0	0	0	0	0	0	3	0	0	0	3	3
08:00 AM	0	0	0	0	0	0	0	0	0	0	0	0	0	0	0	2	0	0	0	2	2
08:15 AM	0	0	0	0	0	**1**	0	0	0	**1**	0	0	0	0	0	**5**	0	0	0	**5**	**6**
08:30 AM	0	0	0	0	0	0	0	0	0	0	0	0	0	0	0	2	0	0	0	2	2
Total Volume	0	0	0	0	0	1	0	0	0	1	0	0	0	0	0	12	0	0	0	12	13
% App. Total	0	0	0	0		100	0	0	0		0	0	0	0		100	0	0	0		
PHF	.000	.000	.000	.000	.000	.250	.000	.000	.000	.250	.000	.000	.000	.000	.000	.600	.000	.000	.000	.600	.542

SW 152nd Street & Turnpike Ramp East

File Name : SW 152nd Street & Turnpike Ramp East
Site Code : 00000000
Start Date : 5/24/2016
Page No : 4

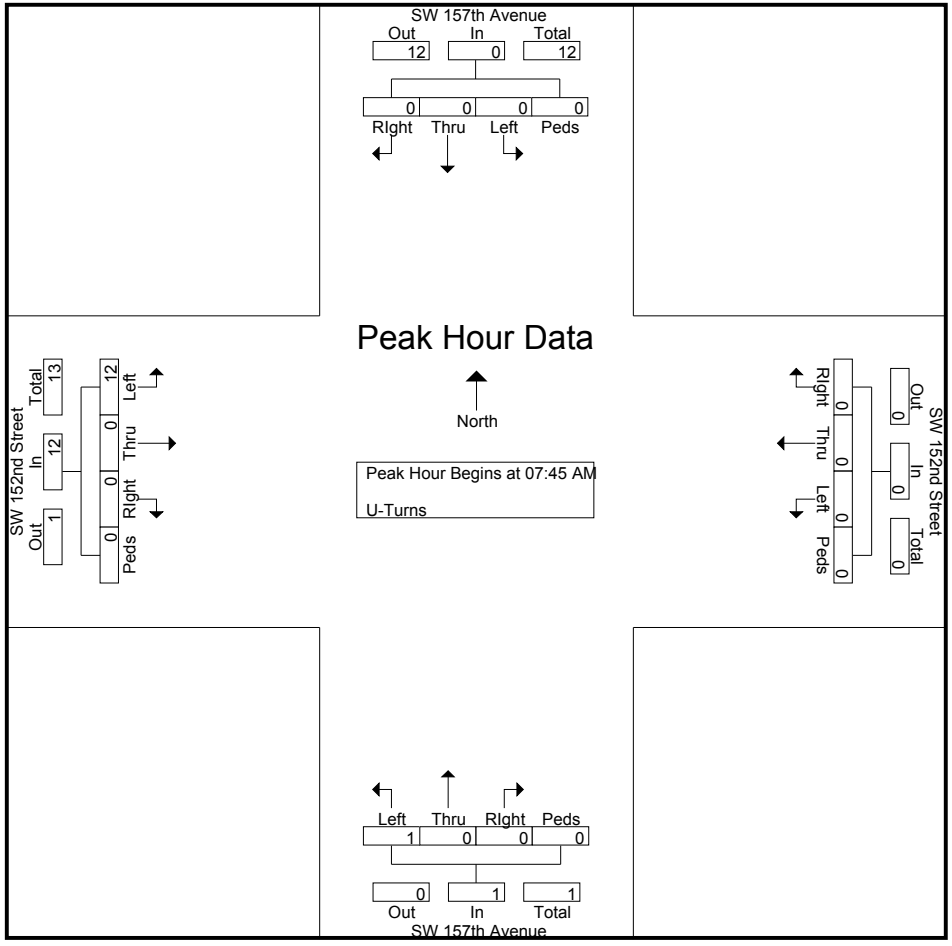

SW 152nd Street & Turnpike Ramp East

File Name : SW 152nd Street & Turnpike Ramp East
Site Code : 00000000
Start Date : 5/24/2016
Page No : 5

	SW 157th Avenue Southbound					SW 157th Avenue Northbound					SW 152nd Street Westbound					SW 152nd Street Eastbound					
Start Time	Left	Thru	RIght	Peds/Bike	App. Total	Left	Thru	RIght	Peds/Bike	App. Total	Left	Thru	RIght	Peds/Bike	App. Total	Left	Thru	RIght	Peds/Bike	App. Total	Int. Total
Peak Hour Analysis From 11:00 AM to 12:45 PM - Peak 1 of 1																					
Peak Hour for Entire Intersection Begins at 12:00 PM																					
12:00 PM	0	0	0	0	0	0	0	0	0	0	0	0	0	0	0	**11**	0	0	0	**11**	**11**
12:15 PM	0	0	0	0	0	0	0	0	0	0	0	0	0	0	0	6	0	0	0	6	6
12:30 PM	0	0	0	0	0	0	0	0	0	0	0	0	0	0	0	8	0	0	0	8	8
12:45 PM	0	0	0	0	0	0	0	0	0	0	0	0	0	0	0	9	0	0	0	9	9
Total Volume	0	0	0	0	0	0	0	0	0	0	0	0	0	0	0	34	0	0	0	34	34
% App. Total	0	0	0	0		0	0	0	0		0	0	0	0		100	0	0	0		
PHF	.000	.000	.000	.000	.000	.000	.000	.000	.000	.000	.000	.000	.000	.000	.000	.773	.000	.000	.000	.773	.773

SW 152nd Street & Turnpike Ramp East

File Name : SW 152nd Street & Turnpike Ramp East
Site Code : 00000000
Start Date : 5/24/2016
Page No : 6

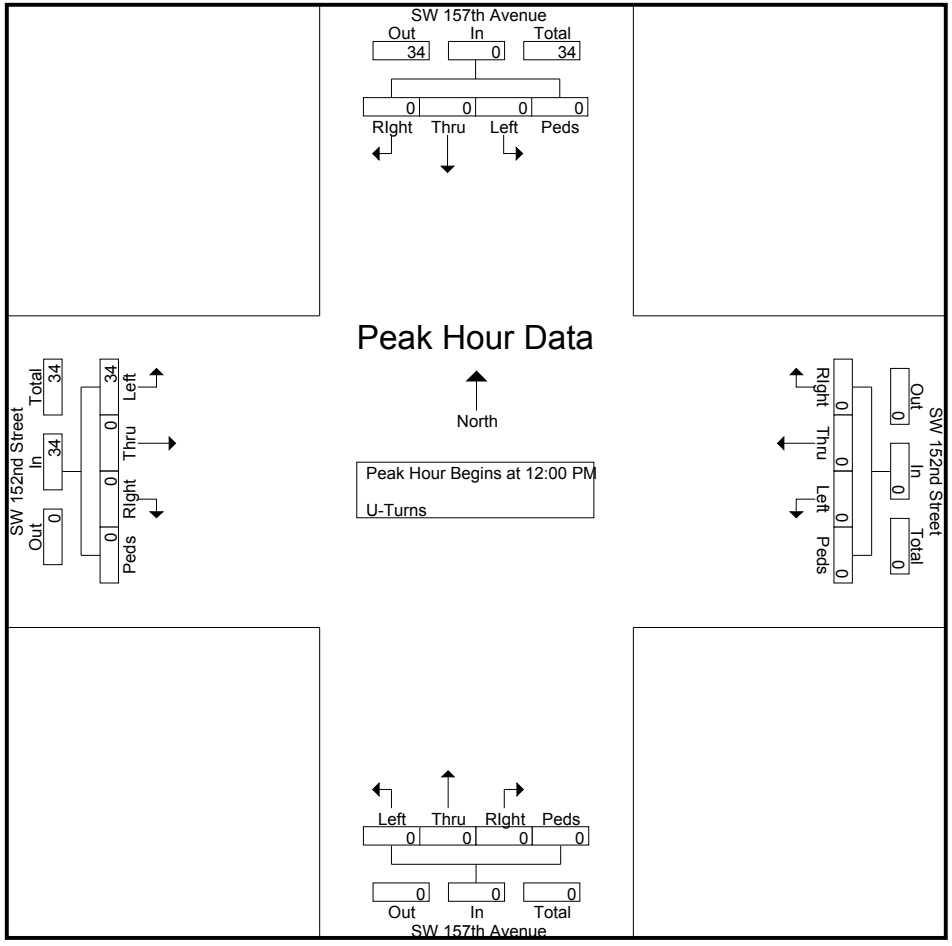

SW 152nd Street & Turnpike Ramp East

File Name : SW 152nd Street & Turnpike Ramp East
Site Code : 00000000
Start Date : 5/24/2016
Page No : 7

	SW 157th Avenue Southbound					SW 157th Avenue Northbound					SW 152nd Street Westbound					SW 152nd Street Eastbound					
Start Time	Left	Thru	RIght	Peds/Bike	App. Total	Left	Thru	RIght	Peds/Bike	App. Total	Left	Thru	RIght	Peds/Bike	App. Total	Left	Thru	RIght	Peds/Bike	App. Total	Int. Total
Peak Hour Analysis From 04:00 PM to 05:45 PM - Peak 1 of 1																					
Peak Hour for Entire Intersection Begins at 04:00 PM																					
04:00 PM	0	0	0	**3**	**3**	0	0	0	0	0	**1**	0	0	0	**1**	**7**	0	0	0	**7**	**11**
04:15 PM	0	0	0	0	0	0	0	0	0	0	1	0	0	0	1	3	0	0	0	3	4
04:30 PM	0	0	0	0	0	0	0	0	0	0	0	0	0	0	0	1	0	0	0	1	1
04:45 PM	0	0	0	0	0	0	0	0	0	0	0	0	0	0	0	1	0	0	0	1	1
Total Volume	0	0	0	3	3	0	0	0	0	0	2	0	0	0	2	12	0	0	0	12	17
% App. Total	0	0	0	100		0	0	0	0		100	0	0	0		100	0	0	0		
PHF	.000	.000	.000	.250	.250	.000	.000	.000	.000	.000	.500	.000	.000	.000	.500	.429	.000	.000	.000	.429	.386

SW 152nd Street & Turnpike Ramp East

File Name : SW 152nd Street & Turnpike Ramp East
Site Code : 00000000
Start Date : 5/24/2016
Page No : 8

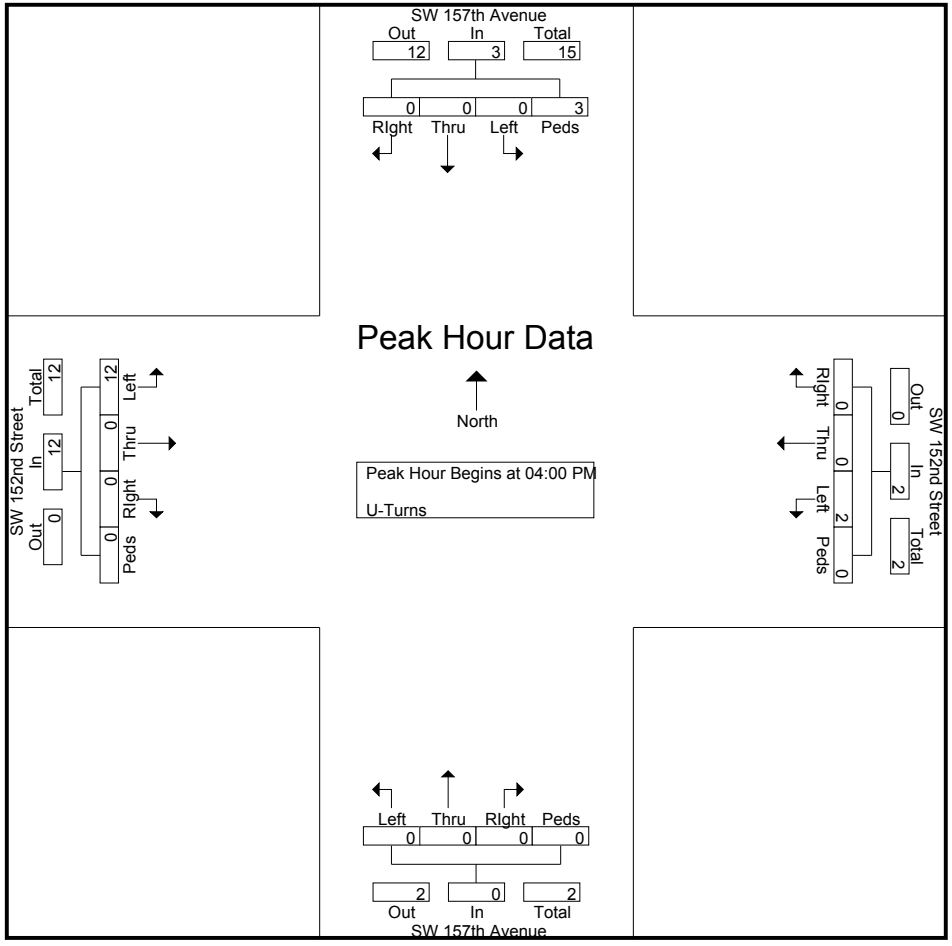

SW 152nd Street & Turnpike Ramp East

File Name : SW 152nd Street & Turnpike Ramp East
Site Code : 00000000
Start Date : 5/24/2016
Page No : 1

Groups Printed- Veh - Trucks - Turns

	SW 157th Avenue Southbound					SW 157th Avenue Northbound					SW 152nd Street Westbound					SW 152nd Street Eastbound					
Start Time	Left	Thru	RIght	Peds/Bike	App. Total	Left	Thru	RIght	Peds/Bike	App. Total	Left	Thru	RIght	Peds/Bike	App. Total	Left	Thru	RIght	Peds/Bike	App. Total	Int. Total
07:00 AM	0	0	0	0	0	33	26	16	2	77	0	192	186	0	378	34	241	0	0	275	730
07:15 AM	0	0	0	2	2	15	18	15	0	48	0	221	203	0	424	67	270	0	0	337	811
07:30 AM	0	0	0	0	0	20	27	23	2	72	0	206	172	0	378	34	245	0	0	279	729
07:45 AM	0	0	0	0	0	30	19	39	1	89	0	242	149	0	391	61	239	0	0	300	780
Total	0	0	0	2	2	98	90	93	5	286	0	861	710	0	1571	196	995	0	0	1191	3050
08:00 AM	0	0	0	0	0	33	15	42	1	91	0	213	157	0	370	50	268	0	0	318	779
08:15 AM	0	0	0	0	0	32	18	35	0	85	0	187	143	0	330	77	334	0	0	411	826
08:30 AM	0	0	0	2	2	56	19	42	1	118	0	200	133	0	333	64	253	0	0	317	770
08:45 AM	0	0	0	1	1	34	18	51	1	104	0	212	107	0	319	41	340	0	0	381	805
Total	0	0	0	3	3	155	70	170	3	398	0	812	540	0	1352	232	1195	0	0	1427	3180
*** BREAK ***																					
11:00 AM	0	0	0	0	0	36	12	45	1	94	0	179	120	0	299	29	257	0	0	286	679
11:15 AM	0	0	0	2	2	35	14	40	0	89	0	187	108	0	295	33	222	0	0	255	641
11:30 AM	0	0	0	0	0	40	15	40	1	96	0	176	106	0	282	35	219	0	0	254	632
11:45 AM	0	0	0	0	0	48	8	48	1	105	0	178	120	0	298	37	241	0	0	278	681
Total	0	0	0	2	2	159	49	173	3	384	0	720	454	0	1174	134	939	0	0	1073	2633
12:00 PM	0	0	0	0	0	45	3	46	1	95	0	172	114	0	286	40	235	0	0	275	656
12:15 PM	0	0	0	0	0	41	9	35	0	85	0	203	96	0	299	43	252	0	0	295	679
12:30 PM	0	0	0	2	2	36	6	39	0	81	0	182	87	0	269	46	235	0	0	281	633
12:45 PM	0	0	0	1	1	40	9	38	0	87	0	180	121	0	301	40	244	0	0	284	673
Total	0	0	0	3	3	162	27	158	1	348	0	737	418	0	1155	169	966	0	0	1135	2641
*** BREAK ***																					
04:00 PM	0	0	0	6	6	28	19	54	0	101	2	223	103	0	328	42	240	0	0	282	717
04:15 PM	0	0	0	0	0	52	15	33	4	104	1	287	116	1	405	47	256	1	0	304	813
04:30 PM	0	0	0	0	0	49	15	40	0	104	0	292	112	0	404	47	231	0	0	278	786
04:45 PM	0	0	0	0	0	32	19	44	0	95	0	264	111	0	375	35	216	0	0	251	721
Total	0	0	0	6	6	161	68	171	4	404	3	1066	442	1	1512	171	943	1	0	1115	3037
05:00 PM	0	0	0	0	0	43	22	38	0	103	0	305	112	0	417	44	269	0	0	313	833
05:15 PM	0	0	0	0	0	37	21	36	0	94	0	264	108	0	372	52	240	0	0	292	758
05:30 PM	0	0	0	0	0	36	17	48	2	103	0	293	89	0	382	39	225	0	0	264	749
05:45 PM	0	0	0	0	0	33	25	51	1	110	0	284	96	0	380	31	218	0	0	249	739
Total	0	0	0	0	0	149	85	173	3	410	0	1146	405	0	1551	166	952	0	0	1118	3079
Grand Total	0	0	0	16	16	884	389	938	19	2230	3	5342	2969	1	8315	1068	5990	1	0	7059	17620
Apprch %	0	0	0	100		39.6	17.4	42.1	0.9		0	64.2	35.7	0		15.1	84.9	0	0		
Total %	0	0	0	0.1	0.1	5	2.2	5.3	0.1	12.7	0	30.3	16.9	0	47.2	6.1	34	0	0	40.1	
Veh	0	0	0	13	13	854	383	918	5	2160	0	5225	2890	0	8115	944	5892	1	0	6837	17125
% Veh	0	0	0	81.2	81.2	96.6	98.5	97.9	26.3	96.9	0	97.8	97.3	0	97.6	88.4	98.4	100	0	96.9	97.2
Trucks	0	0	0	0	0	27	6	20	14	67	1	117	79	1	198	24	98	0	0	122	387
% Trucks	0	0	0	0	0	3.1	1.5	2.1	73.7	3	33.3	2.2	2.7	100	2.4	2.2	1.6	0	0	1.7	2.2

SW 152nd Street & Turnpike Ramp East

File Name : SW 152nd Street & Turnpike Ramp East
Site Code : 00000000
Start Date : 5/24/2016
Page No : 2

Groups Printed- Veh - Trucks - Turns

	SW 157th Avenue Southbound					SW 157th Avenue Northbound					SW 152nd Street Westbound					SW 152nd Street Eastbound					
	Left	Thru	RIght	Peds/Bike	App. Total	Left	Thru	RIght	Peds/Bike	App. Total	Left	Thru	RIght	Peds/Bike	App. Total	Left	Thru	RIght	Peds/Bike	App. Total	Int. Total
U-Turns	0	0	0	3	3	3	0	0	0	3	2	0	0	0	2	100	0	0	0	100	108
% U-Turns	0	0	0	18.8	18.8	0.3	0	0	0	0.1	66.7	0	0	0	0	9.4	0	0	0	1.4	0.6

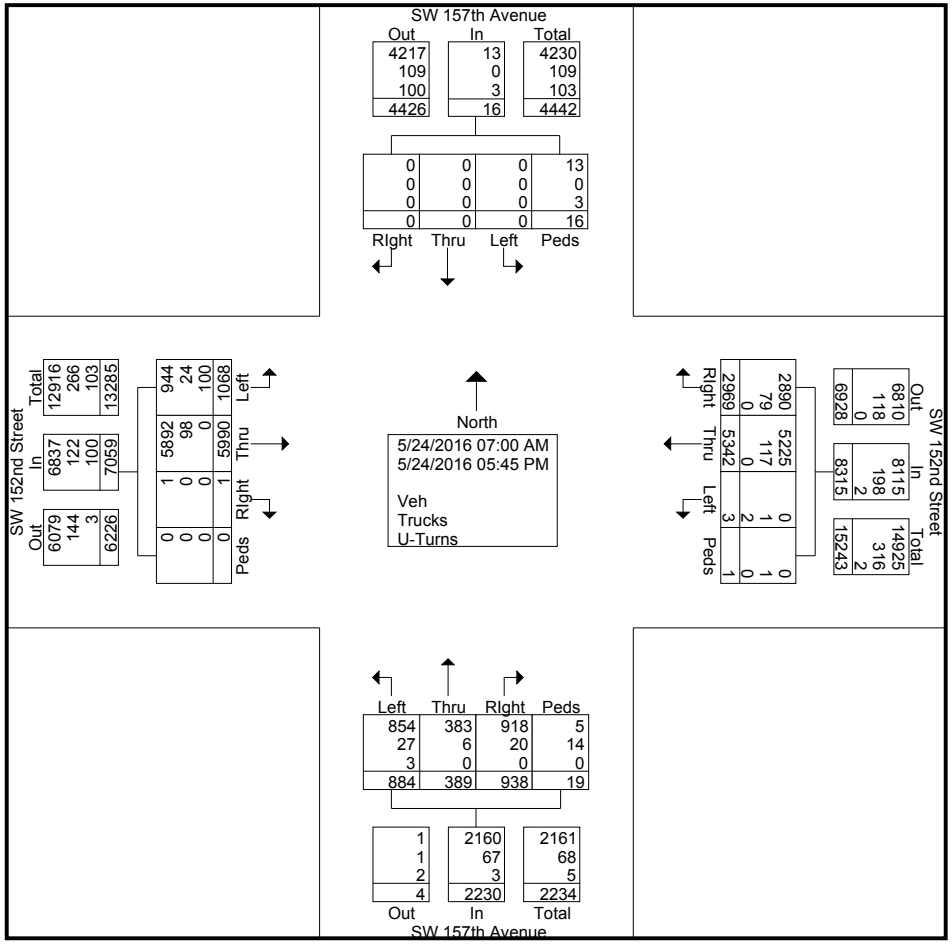

SW 152nd Street & Turnpike Ramp East

File Name : SW 152nd Street & Turnpike Ramp East
Site Code : 00000000
Start Date : 5/24/2016
Page No : 3

	SW 157th Avenue Southbound					SW 157th Avenue Northbound					SW 152nd Street Westbound					SW 152nd Street Eastbound					
Start Time	Left	Thru	RIght	Peds/Bike	App. Total	Left	Thru	RIght	Peds/Bike	App. Total	Left	Thru	RIght	Peds/Bike	App. Total	Left	Thru	RIght	Peds/Bike	App. Total	Int. Total
Peak Hour Analysis From 07:00 AM to 08:45 AM - Peak 1 of 1																					
Peak Hour for Entire Intersection Begins at 08:00 AM																					
08:00 AM	0	0	0	0	0	33	15	42	**1**	91	0	**213**	**157**	0	**370**	50	268	0	0	318	779
08:15 AM	0	0	0	0	0	32	18	35	0	85	0	187	143	0	330	**77**	334	0	0	**411**	**826**
08:30 AM	0	0	0	**2**	**2**	**56**	**19**	42	1	**118**	0	200	133	0	333	64	253	0	0	317	770
08:45 AM	0	0	0	1	1	34	18	**51**	1	104	0	212	107	0	319	41	**340**	0	0	381	805
Total Volume	0	0	0	3	3	155	70	170	3	398	0	812	540	0	1352	232	1195	0	0	1427	3180
% App. Total	0	0	0	100		38.9	17.6	42.7	0.8		0	60.1	39.9	0		16.3	83.7	0	0		
PHF	.000	.000	.000	.375	.375	.692	.921	.833	.750	.843	.000	.953	.860	.000	.914	.753	.879	.000	.000	.868	.962

SW 152nd Street & Turnpike Ramp East

File Name : SW 152nd Street & Turnpike Ramp East
Site Code : 00000000
Start Date : 5/24/2016
Page No : 4

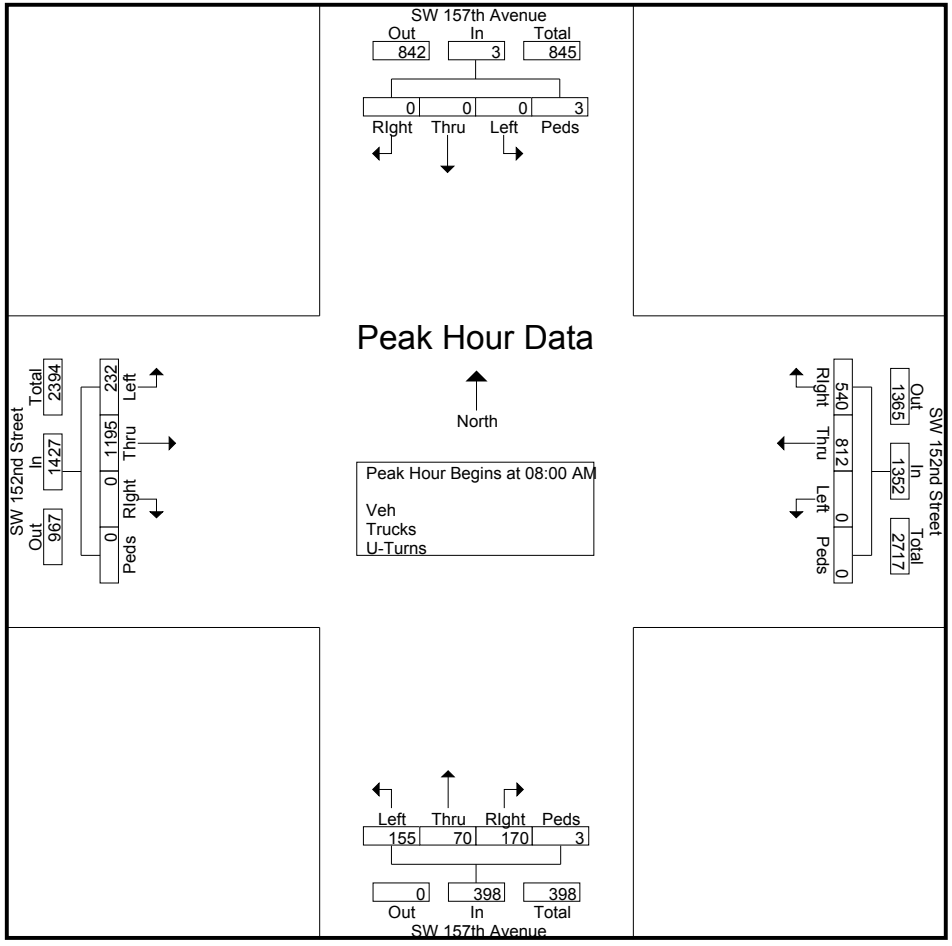

SW 152nd Street & Turnpike Ramp East

File Name : SW 152nd Street & Turnpike Ramp East
Site Code : 00000000
Start Date : 5/24/2016
Page No : 5

	SW 157th Avenue Southbound					SW 157th Avenue Northbound					SW 152nd Street Westbound					SW 152nd Street Eastbound					
Start Time	Left	Thru	RIght	Peds/Bike	App. Total	Left	Thru	RIght	Peds/Bike	App. Total	Left	Thru	RIght	Peds/Bike	App. Total	Left	Thru	RIght	Peds/Bike	App. Total	Int. Total
Peak Hour Analysis From 11:00 AM to 12:45 PM - Peak 1 of 1																					
Peak Hour for Entire Intersection Begins at 11:45 AM																					
11:45 AM	0	0	0	0	0	**48**	8	**48**	**1**	**105**	0	178	**120**	0	298	37	241	0	0	278	**681**
12:00 PM	0	0	0	0	0	45	3	46	1	95	0	172	114	0	286	40	235	0	0	275	656
12:15 PM	0	0	0	0	0	41	**9**	35	0	85	0	**203**	96	0	**299**	43	**252**	0	0	**295**	679
12:30 PM	0	0	0	**2**	**2**	36	6	39	0	81	0	182	87	0	269	**46**	235	0	0	281	633
Total Volume	0	0	0	2	2	170	26	168	2	366	0	735	417	0	1152	166	963	0	0	1129	2649
% App. Total	0	0	0	100		46.4	7.1	45.9	0.5		0	63.8	36.2	0		14.7	85.3	0	0		
PHF	.000	.000	.000	.250	.250	.885	.722	.875	.500	.871	.000	.905	.869	.000	.963	.902	.955	.000	.000	.957	.972

SW 152nd Street & Turnpike Ramp East

File Name : SW 152nd Street & Turnpike Ramp East
Site Code : 00000000
Start Date : 5/24/2016
Page No : 6

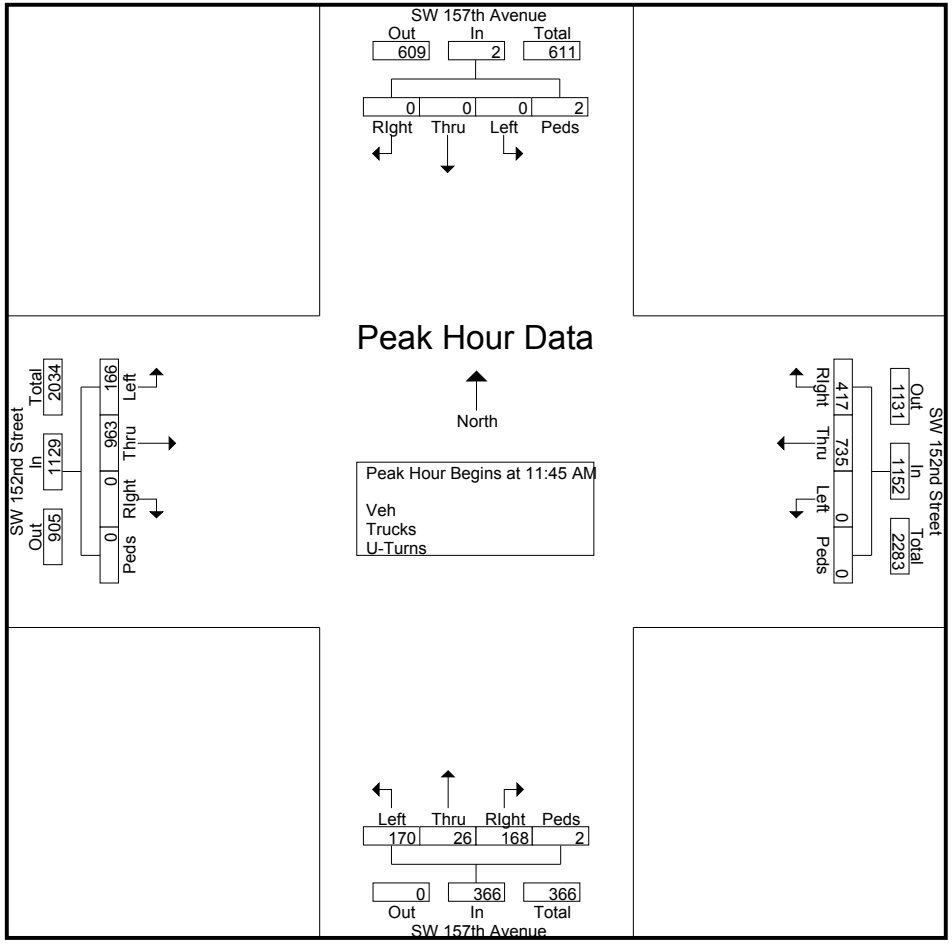

SW 152nd Street & Turnpike Ramp East

File Name : SW 152nd Street & Turnpike Ramp East
Site Code : 00000000
Start Date : 5/24/2016
Page No : 7

	SW 157th Avenue Southbound					SW 157th Avenue Northbound					SW 152nd Street Westbound					SW 152nd Street Eastbound					
Start Time	Left	Thru	RIght	Peds/Bike	App. Total	Left	Thru	RIght	Peds/Bike	App. Total	Left	Thru	RIght	Peds/Bike	App. Total	Left	Thru	RIght	Peds/Bike	App. Total	Int. Total
Peak Hour Analysis From 04:00 PM to 05:45 PM - Peak 1 of 1																					
Peak Hour for Entire Intersection Begins at 04:15 PM																					
04:15 PM	0	0	0	0	0	**52**	15	33	**4**	**104**	**1**	287	**116**	**1**	405	**47**	256	**1**	0	304	813
04:30 PM	0	0	0	0	0	49	15	40	0	104	0	292	112	0	404	47	231	0	0	278	786
04:45 PM	0	0	0	0	0	32	19	**44**	0	95	0	264	111	0	375	35	216	0	0	251	721
05:00 PM	0	0	0	0	0	43	**22**	38	0	103	0	**305**	112	0	**417**	44	**269**	0	0	**313**	**833**
Total Volume	0	0	0	0	0	176	71	155	4	406	1	1148	451	1	1601	173	972	1	0	1146	3153
% App. Total	0	0	0	0		43.3	17.5	38.2	1		0.1	71.7	28.2	0.1		15.1	84.8	0.1	0		
PHF	.000	.000	.000	.000	.000	.846	.807	.881	.250	.976	.250	.941	.972	.250	.960	.920	.903	.250	.000	.915	.946

SW 152nd Street & Turnpike Ramp East

File Name : SW 152nd Street & Turnpike Ramp East
Site Code : 00000000
Start Date : 5/24/2016
Page No : 8

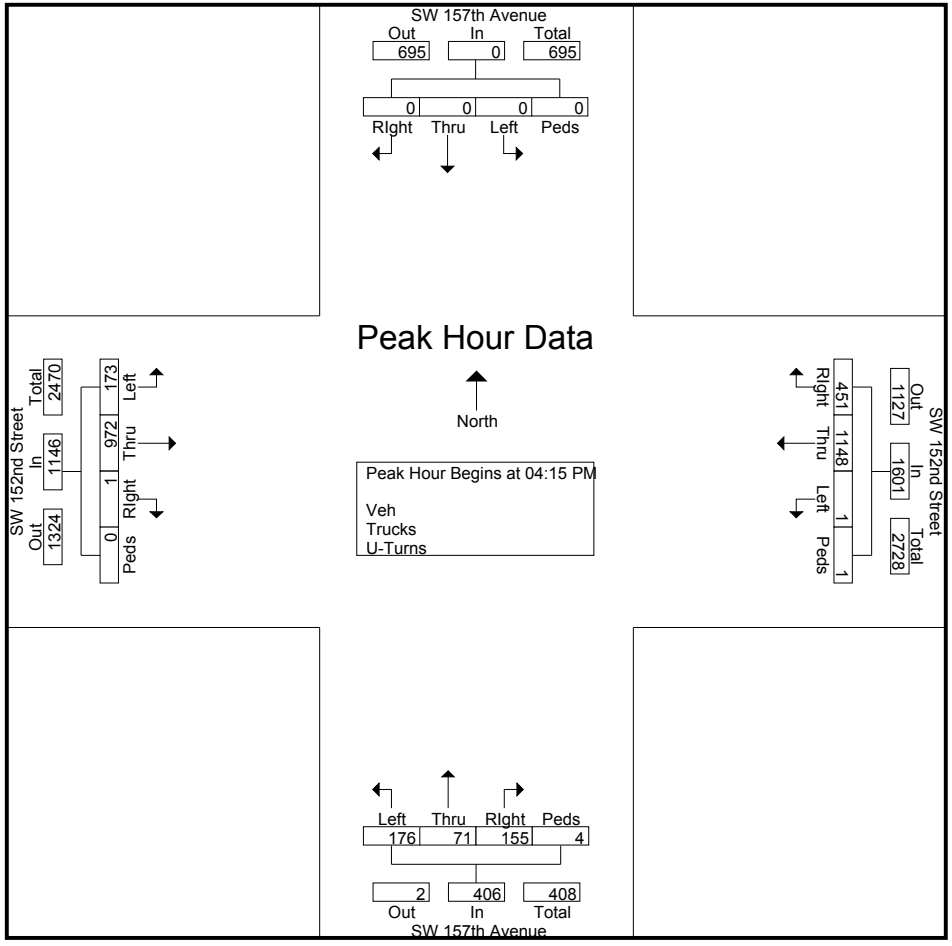

SW 152nd Street & Turnpike Ramp West

File Name : TMC-4 SW 152nd St & Turnpike Ramp West
Site Code : 00000000
Start Date : 5/24/2016
Page No : 1

Groups Printed- Trucks

	Turnpike Ramp West Southbound					Turnpike Ramp West Northbound					SW 152nd Street Westbound					SW 152nd Street Eastbound					
Start Time	Left	Thru	RIght	Bikes	App. Total	Left	Thru	RIght	Bikes	App. Total	Left	Thru	RIght	Bikes	App. Total	Left	Thru	RIght	Bikes	App. Total	Int. Total
07:00 AM	0	0	0	0	0	0	0	0	0	0	0	6	0	0	6	0	1	1	0	2	8
07:15 AM	2	0	0	0	2	0	0	0	0	0	2	4	0	0	6	0	0	2	0	2	10
07:30 AM	6	0	0	0	6	0	0	0	1	1	2	4	0	0	6	0	4	0	0	4	17
07:45 AM	5	0	0	0	5	0	0	0	0	0	0	3	0	0	3	0	5	1	0	6	14
Total	13	0	0	0	13	0	0	0	1	1	4	17	0	0	21	0	10	4	0	14	49
08:00 AM	5	0	0	0	5	0	0	0	1	1	1	8	0	0	9	0	2	1	0	3	18
08:15 AM	3	0	1	0	4	0	0	0	0	0	1	6	0	0	7	0	6	0	0	6	17
08:30 AM	2	0	1	0	3	0	0	0	1	1	1	11	0	0	12	0	6	2	0	8	24
08:45 AM	4	0	1	0	5	0	0	0	1	1	1	6	0	0	7	0	8	2	0	10	23
Total	14	0	3	0	17	0	0	0	3	3	4	31	0	0	35	0	22	5	0	27	82
*** BREAK ***																					
11:00 AM	6	0	0	0	6	0	0	0	0	0	0	7	0	0	7	0	5	6	0	11	24
11:15 AM	7	1	0	0	8	0	0	0	0	0	2	11	0	0	13	0	10	1	0	11	32
11:30 AM	2	0	0	0	2	0	0	0	0	0	2	4	0	0	6	0	0	4	0	4	12
11:45 AM	5	0	0	0	5	0	0	0	0	0	1	3	0	0	4	0	6	4	0	10	19
Total	20	1	0	0	21	0	0	0	0	0	5	25	0	0	30	0	21	15	0	36	87
12:00 PM	2	1	0	0	3	0	0	0	1	1	0	8	0	0	8	0	3	4	0	7	19
12:15 PM	1	0	0	0	1	0	0	0	0	0	0	4	0	0	4	0	3	2	0	5	10
12:30 PM	4	0	1	0	5	0	0	0	0	0	4	4	0	0	8	0	2	7	0	9	22
12:45 PM	2	0	0	1	3	0	0	0	0	0	4	4	0	0	8	0	6	2	0	8	19
Total	9	1	1	1	12	0	0	0	1	1	8	20	0	0	28	0	14	15	0	29	70
*** BREAK ***																					
04:00 PM	0	0	1	0	1	0	0	0	0	0	3	9	0	0	12	0	3	0	0	3	16
04:15 PM	2	2	0	0	4	0	0	0	3	3	2	6	0	0	8	0	7	2	0	9	24
04:30 PM	0	0	0	0	0	0	0	0	0	0	1	11	0	0	12	0	2	0	0	2	14
04:45 PM	0	0	0	0	0	0	0	0	0	0	0	8	0	0	8	0	5	2	0	7	15
Total	2	2	1	0	5	0	0	0	3	3	6	34	0	0	40	0	17	4	0	21	69
05:00 PM	1	0	0	0	1	0	0	0	0	0	0	5	0	0	5	0	2	1	0	3	9
05:15 PM	1	0	2	0	3	0	0	0	0	0	0	3	0	0	3	0	1	0	0	1	7
05:30 PM	1	0	1	0	2	0	0	0	1	1	0	5	0	0	5	0	2	1	0	3	11
05:45 PM	2	0	0	0	2	0	0	0	1	1	1	1	0	0	2	0	1	1	0	2	7
Total	5	0	3	0	8	0	0	0	2	2	1	14	0	0	15	0	6	3	0	9	34
Grand Total	63	4	8	1	76	0	0	0	10	10	28	141	0	0	169	0	90	46	0	136	391
Apprch %	82.9	5.3	10.5	1.3		0	0	0	100		16.6	83.4	0	0		0	66.2	33.8	0		
Total %	16.1	1	2	0.3	19.4	0	0	0	2.6	2.6	7.2	36.1	0	0	43.2	0	23	11.8	0	34.8	

SW 152nd Street & Turnpike Ramp West

File Name : TMC-4 SW 152nd St & Turnpike Ramp West
Site Code : 00000000
Start Date : 5/24/2016
Page No : 2

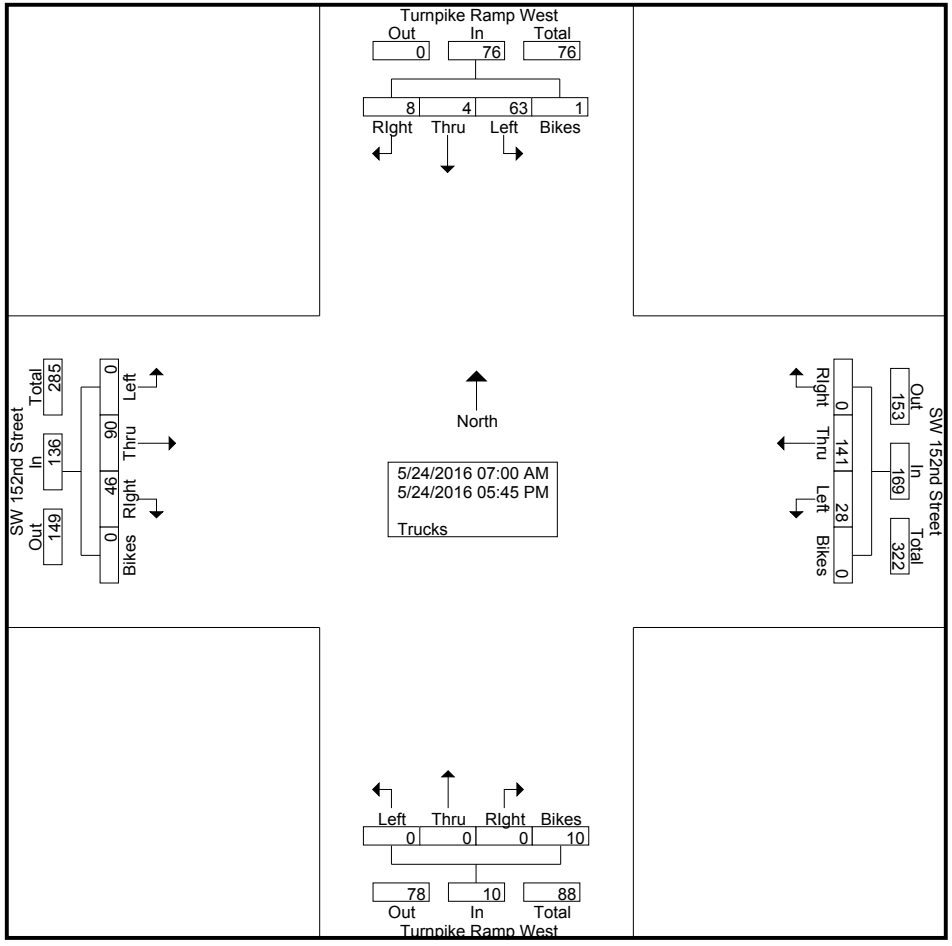

SW 152nd Street & Turnpike Ramp West

File Name : TMC-4 SW 152nd St & Turnpike Ramp West
Site Code : 00000000
Start Date : 5/24/2016
Page No : 3

	Turnpike Ramp West Southbound					Turnpike Ramp West Northbound					SW 152nd Street Westbound					SW 152nd Street Eastbound					
Start Time	Left	Thru	RIght	Bikes	App. Total	Left	Thru	RIght	Bikes	App. Total	Left	Thru	RIght	Bikes	App. Total	Left	Thru	RIght	Bikes	App. Total	Int. Total
Peak Hour Analysis From 07:00 AM to 08:45 AM - Peak 1 of 1																					
Peak Hour for Entire Intersection Begins at 08:00 AM																					
08:00 AM	**5**	0	0	0	**5**	0	0	0	**1**	**1**	**1**	8	0	0	9	0	2	1	0	3	18
08:15 AM	3	0	**1**	0	4	0	0	0	0	0	1	6	0	0	7	0	6	0	0	6	17
08:30 AM	2	0	1	0	3	0	0	0	1	1	1	**11**	0	0	**12**	0	6	**2**	0	8	**24**
08:45 AM	4	0	1	0	5	0	0	0	1	1	1	6	0	0	7	0	**8**	2	0	**10**	23
Total Volume	14	0	3	0	17	0	0	0	3	3	4	31	0	0	35	0	22	5	0	27	82
% App. Total	82.4	0	17.6	0		0	0	0	100		11.4	88.6	0	0		0	81.5	18.5	0		
PHF	.700	.000	.750	.000	.850	.000	.000	.000	.750	.750	1.00	.705	.000	.000	.729	.000	.688	.625	.000	.675	.854

SW 152nd Street & Turnpike Ramp West

File Name : TMC-4 SW 152nd St & Turnpike Ramp West
Site Code : 00000000
Start Date : 5/24/2016
Page No : 4

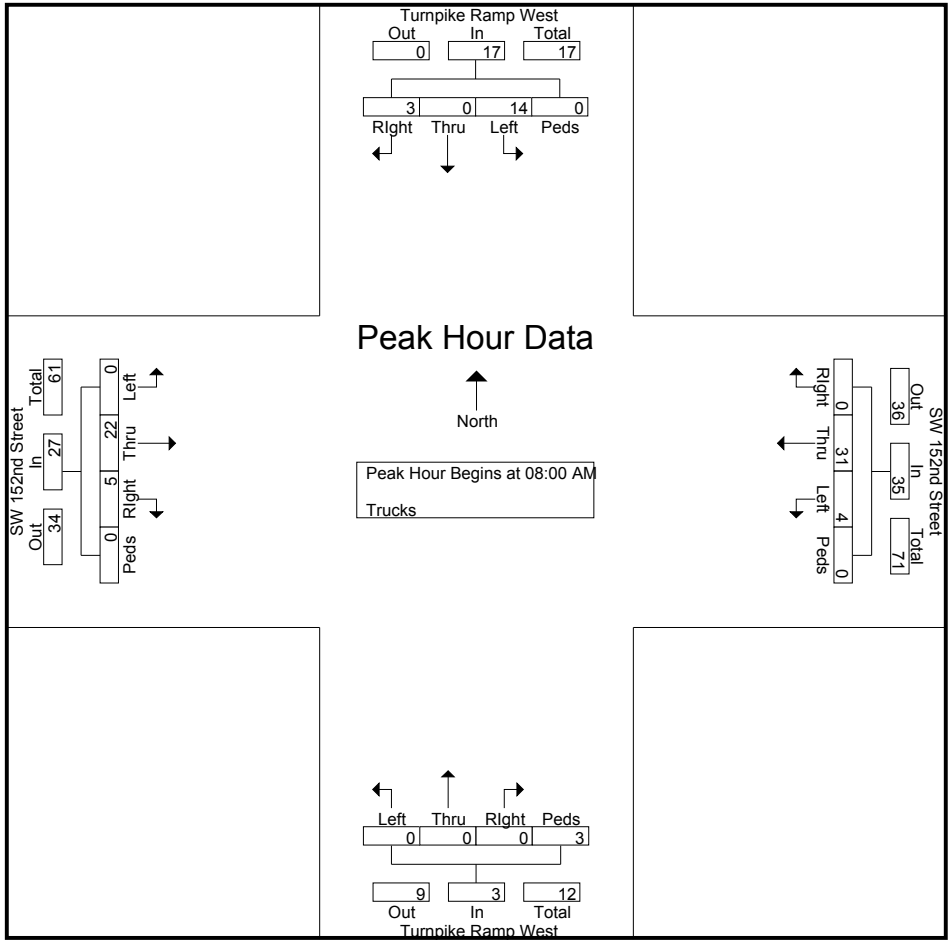

SW 152nd Street & Turnpike Ramp West

File Name : TMC-4 SW 152nd St & Turnpike Ramp West
Site Code : 00000000
Start Date : 5/24/2016
Page No : 5

	Turnpike Ramp West Southbound					Turnpike Ramp West Northbound					SW 152nd Street Westbound					SW 152nd Street Eastbound					
Start Time	Left	Thru	RIght	Bikes	App. Total	Left	Thru	RIght	Bikes	App. Total	Left	Thru	RIght	Bikes	App. Total	Left	Thru	RIght	Bikes	App. Total	Int. Total
Peak Hour Analysis From 11:00 AM to 12:45 PM - Peak 1 of 1																					
Peak Hour for Entire Intersection Begins at 11:00 AM																					
11:00 AM	6	0	0	0	6	0	0	0	0	0	0	7	0	0	7	0	5	**6**	0	**11**	24
11:15 AM	**7**	**1**	0	0	**8**	0	0	0	0	0	**2**	**11**	0	0	**13**	0	**10**	1	0	11	**32**
11:30 AM	2	0	0	0	2	0	0	0	0	0	2	4	0	0	6	0	0	4	0	4	12
11:45 AM	5	0	0	0	5	0	0	0	0	0	1	3	0	0	4	0	6	4	0	10	19
Total Volume	20	1	0	0	21	0	0	0	0	0	5	25	0	0	30	0	21	15	0	36	87
% App. Total	95.2	4.8	0	0		0	0	0	0		16.7	83.3	0	0		0	58.3	41.7	0		
PHF	.714	.250	.000	.000	.656	.000	.000	.000	.000	.000	.625	.568	.000	.000	.577	.000	.525	.625	.000	.818	.680

SW 152nd Street & Turnpike Ramp West

File Name : TMC-4 SW 152nd St & Turnpike Ramp West
Site Code : 00000000
Start Date : 5/24/2016
Page No : 6

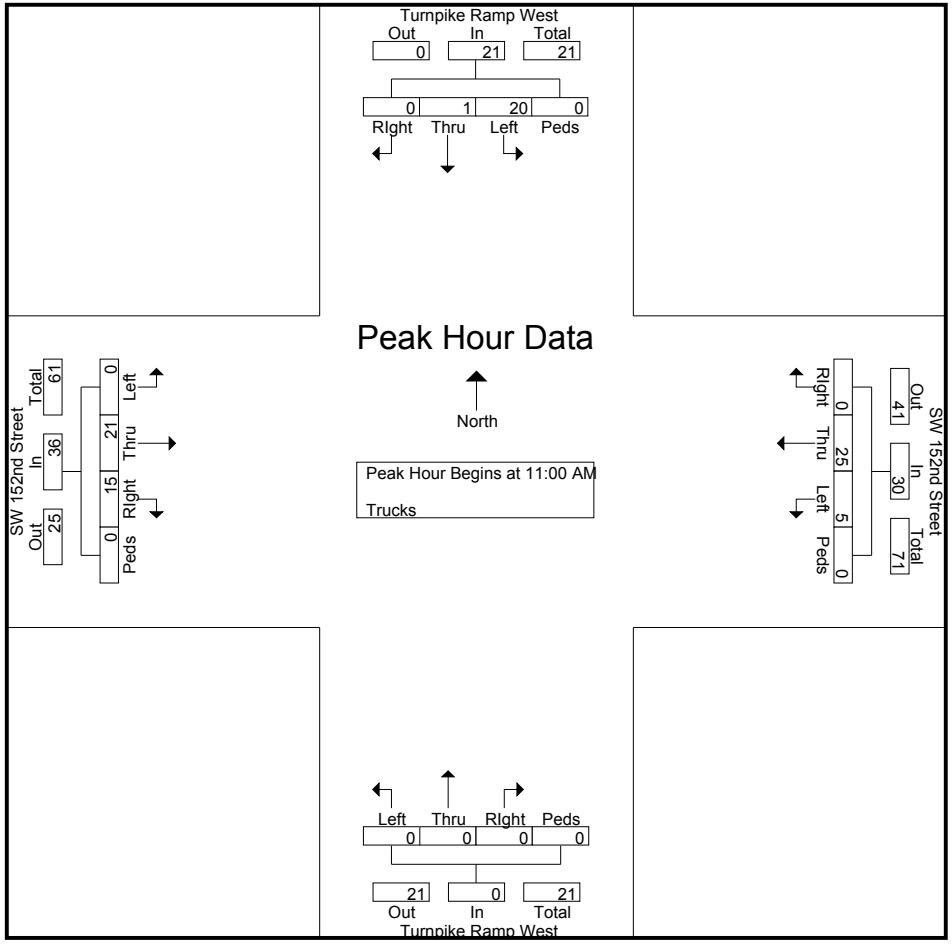

SW 152nd Street & Turnpike Ramp West

File Name : TMC-4 SW 152nd St & Turnpike Ramp West
Site Code : 00000000
Start Date : 5/24/2016
Page No : 7

	Turnpike Ramp West Southbound					Turnpike Ramp West Northbound					SW 152nd Street Westbound					SW 152nd Street Eastbound					
Start Time	Left	Thru	RIght	Bikes	App. Total	Left	Thru	RIght	Bikes	App. Total	Left	Thru	RIght	Bikes	App. Total	Left	Thru	RIght	Bikes	App. Total	Int. Total
Peak Hour Analysis From 04:00 PM to 05:45 PM - Peak 1 of 1																					
Peak Hour for Entire Intersection Begins at 04:00 PM																					
04:00 PM	0	0	**1**	0	1	0	0	0	0	0	**3**	9	0	0	**12**	0	3	0	0	3	16
04:15 PM	**2**	**2**	0	0	**4**	0	0	0	**3**	**3**	2	6	0	0	8	0	**7**	**2**	0	**9**	**24**
04:30 PM	0	0	0	0	0	0	0	0	0	0	1	**11**	0	0	12	0	2	0	0	2	14
04:45 PM	0	0	0	0	0	0	0	0	0	0	0	8	0	0	8	0	5	2	0	7	15
Total Volume	2	2	1	0	5	0	0	0	3	3	6	34	0	0	40	0	17	4	0	21	69
% App. Total	40	40	20	0		0	0	0	100		15	85	0	0		0	81	19	0		
PHF	.250	.250	.250	.000	.313	.000	.000	.000	.250	.250	.500	.773	.000	.000	.833	.000	.607	.500	.000	.583	.719

SW 152nd Street & Turnpike Ramp West

File Name : TMC-4 SW 152nd St & Turnpike Ramp West
Site Code : 00000000
Start Date : 5/24/2016
Page No : 8

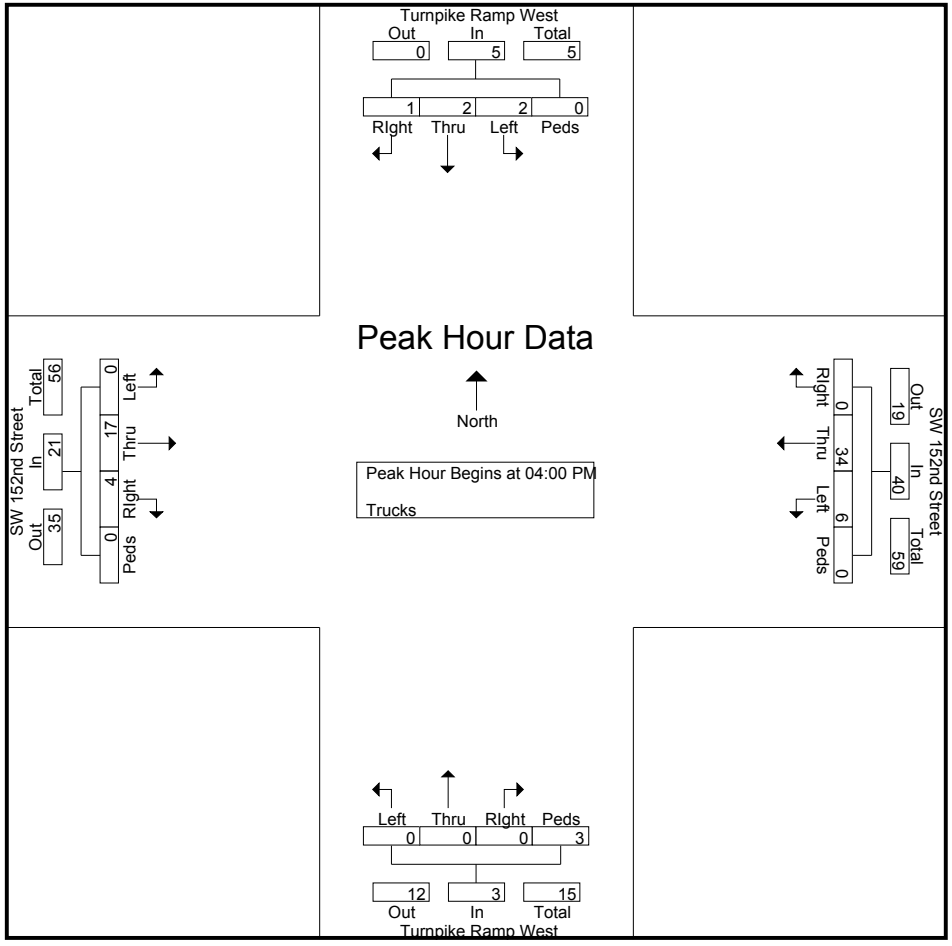

SW 152nd Street & Turnpike Ramp West

File Name : TMC-4 SW 152nd St & Turnpike Ramp West
Site Code : 00000000
Start Date : 5/24/2016
Page No : 1

Groups Printed- Turns

	Turnpike Ramp West Southbound					Turnpike Ramp West Northbound					SW 152nd Street Westbound					SW 152nd Street Eastbound					
Start Time	Left	Thru	RIght	Peds/Bike	App. Total	Left	Thru	RIght	Peds/Bike	App. Total	Left	Thru	RIght	Peds/Bike	App. Total	Left	Thru	RIght	Peds/Bike	App. Total	Int. Total
*** BREAK ***																					
12:15 PM	0	0	0	0	0	0	0	0	0	0	0	0	0	0	0	1	0	0	0	1	1
*** BREAK ***																					
12:45 PM	0	0	0	0	0	0	0	0	0	0	1	0	0	0	1	0	0	0	0	0	1
Total	0	0	0	0	0	0	0	0	0	0	1	0	0	0	1	1	0	0	0	1	2
*** BREAK ***																					
04:45 PM	0	0	0	0	0	0	0	0	0	0	1	0	0	0	1	0	0	0	0	0	1
Total	0	0	0	0	0	0	0	0	0	0	1	0	0	0	1	0	0	0	0	0	1
*** BREAK ***																					
Grand Total	0	0	0	0	0	0	0	0	0	0	2	0	0	0	2	1	0	0	0	1	3
Apprch %	0	0	0	0		0	0	0	0		100	0	0	0		100	0	0	0		
Total %	0	0	0	0	0	0	0	0	0	0	66.7	0	0	0	66.7	33.3	0	0	0	33.3	

SW 152nd Street & Turnpike Ramp West

File Name : TMC-4 SW 152nd St & Turnpike Ramp West
Site Code : 00000000
Start Date : 5/24/2016
Page No : 2

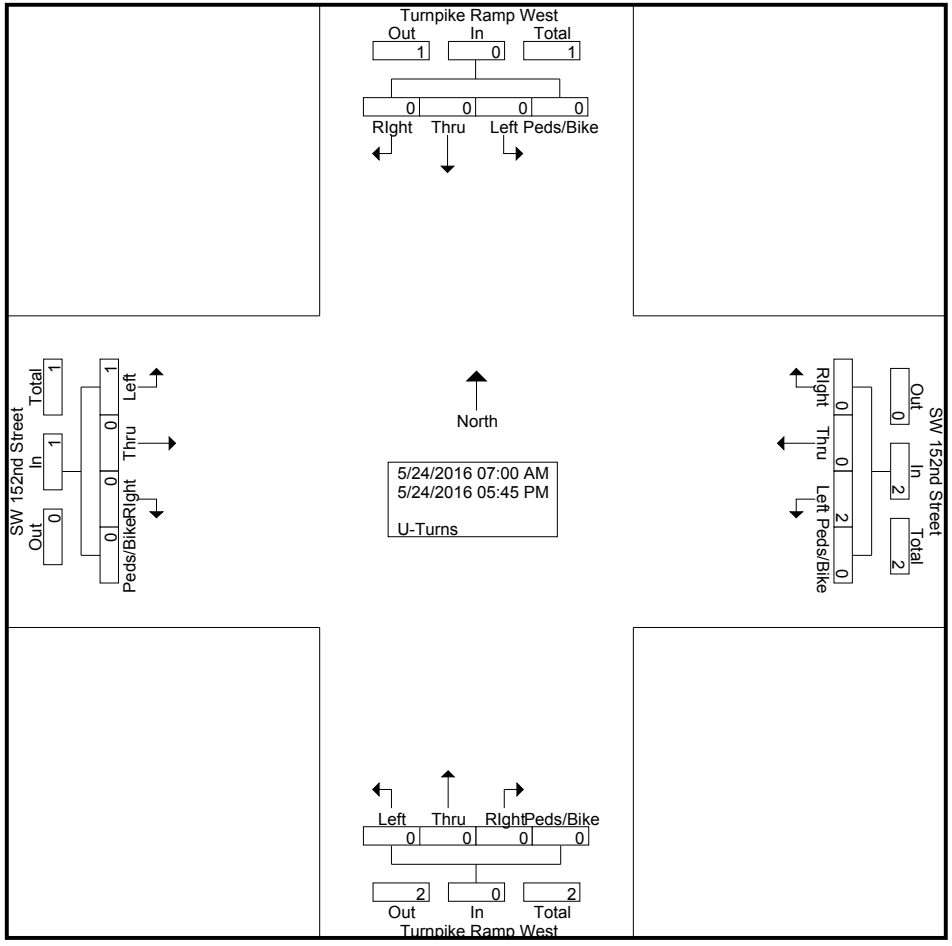

SW 152nd Street & Turnpike Ramp West

File Name : TMC-4 SW 152nd St & Turnpike Ramp West
Site Code : 00000000
Start Date : 5/24/2016
Page No : 3

	Turnpike Ramp West Southbound					Turnpike Ramp West Northbound					SW 152nd Street Westbound					SW 152nd Street Eastbound					
Start Time	Left	Thru	RIght	Peds/Bike	App. Total	Left	Thru	RIght	Peds/Bike	App. Total	Left	Thru	RIght	Peds/Bike	App. Total	Left	Thru	RIght	Peds/Bike	App. Total	Int. Total
Peak Hour Analysis From 07:00 AM to 08:45 AM - Peak 1 of 1																					
Peak Hour for Entire Intersection Begins at 07:00 AM																					
07:00 AM	0	0	0	0	0	0	0	0	0	0	0	0	0	0	0	0	0	0	0	0	0
07:15 AM	0	0	0	0	0	0	0	0	0	0	0	0	0	0	0	0	0	0	0	0	0
07:30 AM	0	0	0	0	0	0	0	0	0	0	0	0	0	0	0	0	0	0	0	0	0
07:45 AM	0	0	0	0	0	0	0	0	0	0	0	0	0	0	0	0	0	0	0	0	0
Total Volume	0	0	0	0	0	0	0	0	0	0	0	0	0	0	0	0	0	0	0	0	0
% App. Total	0	0	0	0		0	0	0	0		0	0	0	0		0	0	0	0		
PHF	.000	.000	.000	.000	.000	.000	.000	.000	.000	.000	.000	.000	.000	.000	.000	.000	.000	.000	.000	.000	.000

SW 152nd Street & Turnpike Ramp West

File Name : TMC-4 SW 152nd St & Turnpike Ramp West
Site Code : 00000000
Start Date : 5/24/2016
Page No : 4

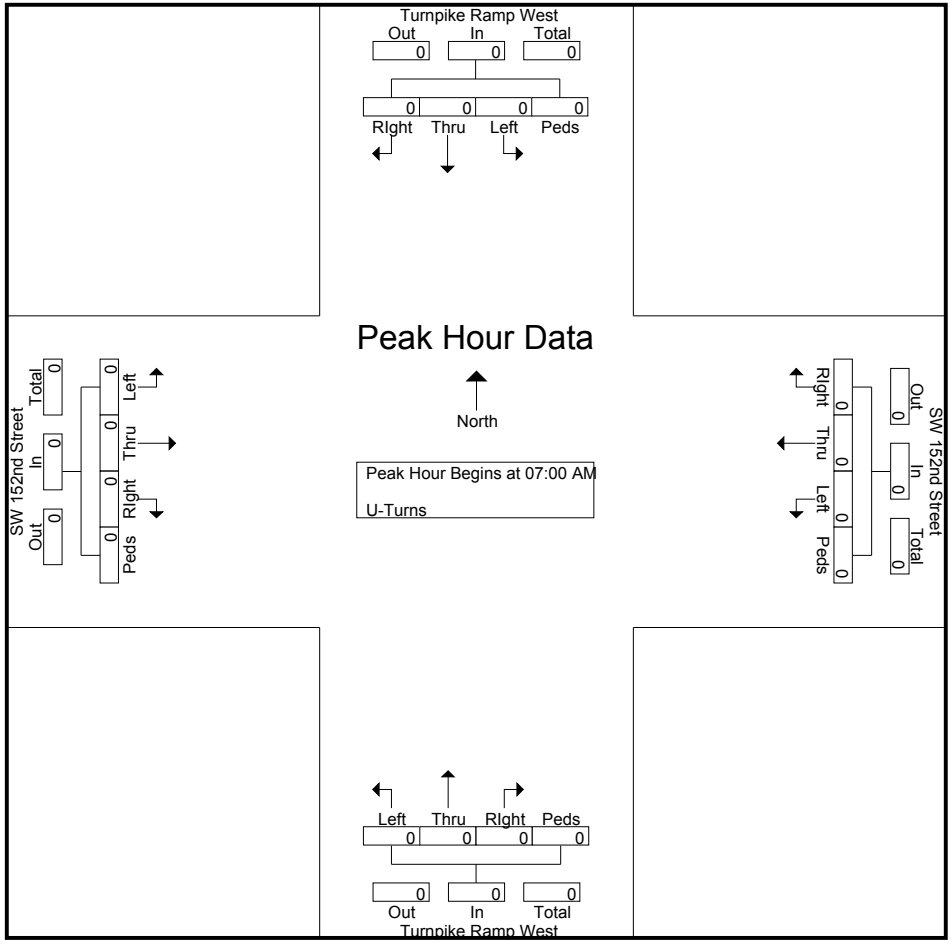

SW 152nd Street & Turnpike Ramp West

File Name : TMC-4 SW 152nd St & Turnpike Ramp West
Site Code : 00000000
Start Date : 5/24/2016
Page No : 5

	Turnpike Ramp West Southbound					Turnpike Ramp West Northbound					SW 152nd Street Westbound					SW 152nd Street Eastbound					
Start Time	Left	Thru	RIght	Peds/Bike	App. Total	Left	Thru	RIght	Peds/Bike	App. Total	Left	Thru	RIght	Peds/Bike	App. Total	Left	Thru	RIght	Peds/Bike	App. Total	Int. Total
Peak Hour Analysis From 11:00 AM to 12:45 PM - Peak 1 of 1																					
Peak Hour for Entire Intersection Begins at 12:00 PM																					
12:00 PM	0	0	0	0	0	0	0	0	0	0	0	0	0	0	0	0	0	0	0	0	0
12:15 PM	0	0	0	0	0	0	0	0	0	0	0	0	0	0	0	**1**	0	0	0	**1**	**1**
12:30 PM	0	0	0	0	0	0	0	0	0	0	0	0	0	0	0	0	0	0	0	0	0
12:45 PM	0	0	0	0	0	0	0	0	0	0	**1**	0	0	0	**1**	0	0	0	0	0	1
Total Volume	0	0	0	0	0	0	0	0	0	0	1	0	0	0	1	1	0	0	0	1	2
% App. Total	0	0	0	0		0	0	0	0		100	0	0	0		100	0	0	0		
PHF	.000	.000	.000	.000	.000	.000	.000	.000	.000	.000	.250	.000	.000	.000	.250	.250	.000	.000	.000	.250	.500

SW 152nd Street & Turnpike Ramp West

File Name : TMC-4 SW 152nd St & Turnpike Ramp West
Site Code : 00000000
Start Date : 5/24/2016
Page No : 6

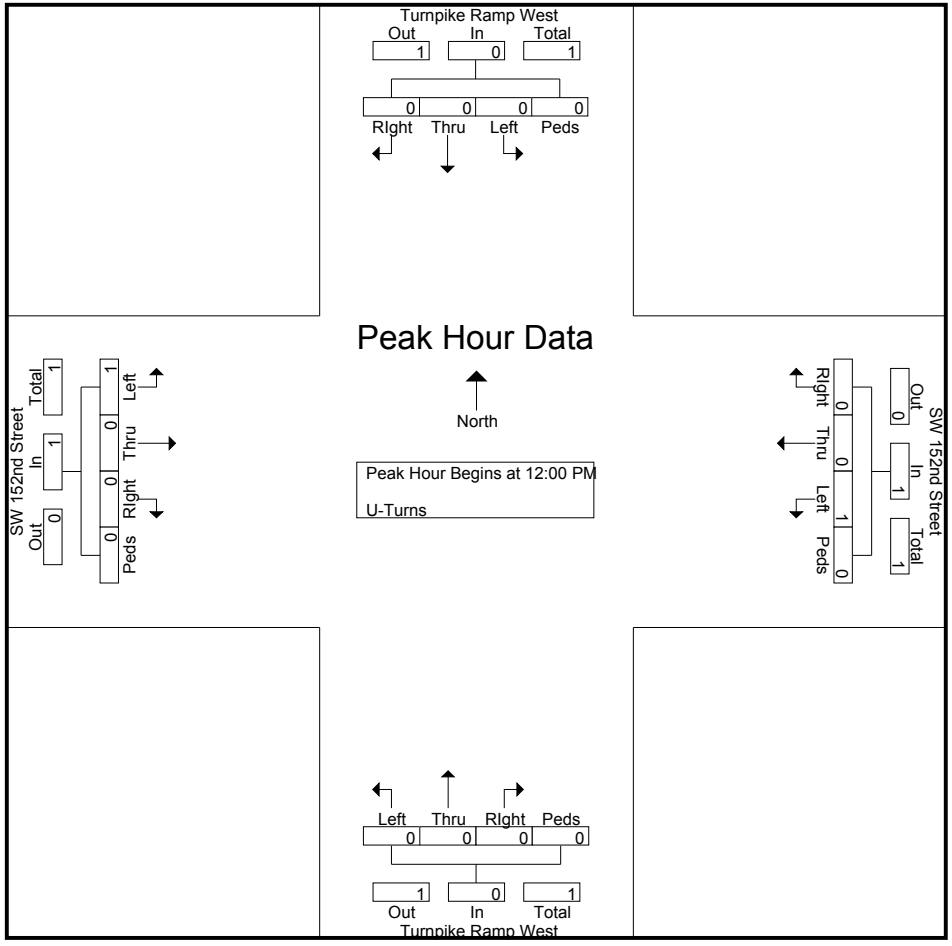

SW 152nd Street & Turnpike Ramp West

File Name : TMC-4 SW 152nd St & Turnpike Ramp West
Site Code : 00000000
Start Date : 5/24/2016
Page No : 7

	Turnpike Ramp West Southbound					Turnpike Ramp West Northbound					SW 152nd Street Westbound					SW 152nd Street Eastbound					
Start Time	Left	Thru	RIght	Peds/Bike	App. Total	Left	Thru	RIght	Peds/Bike	App. Total	Left	Thru	RIght	Peds/Bike	App. Total	Left	Thru	RIght	Peds/Bike	App. Total	Int. Total
Peak Hour Analysis From 04:00 PM to 05:45 PM - Peak 1 of 1																					
Peak Hour for Entire Intersection Begins at 04:00 PM																					
04:00 PM	0	0	0	0	0	0	0	0	0	0	0	0	0	0	0	0	0	0	0	0	0
04:15 PM	0	0	0	0	0	0	0	0	0	0	0	0	0	0	0	0	0	0	0	0	0
04:30 PM	0	0	0	0	0	0	0	0	0	0	0	0	0	0	0	0	0	0	0	0	0
04:45 PM	0	0	0	0	0	0	0	0	0	0	**1**	0	0	0	**1**	0	0	0	0	0	**1**
Total Volume	0	0	0	0	0	0	0	0	0	0	1	0	0	0	1	0	0	0	0	0	1
% App. Total	0	0	0	0		0	0	0	0		100	0	0	0		0	0	0	0		
PHF	.000	.000	.000	.000	.000	.000	.000	.000	.000	.000	.250	.000	.000	.000	.250	.000	.000	.000	.000	.000	.250

SW 152nd Street & Turnpike Ramp West

File Name : TMC-4 SW 152nd St & Turnpike Ramp West
Site Code : 00000000
Start Date : 5/24/2016
Page No : 8

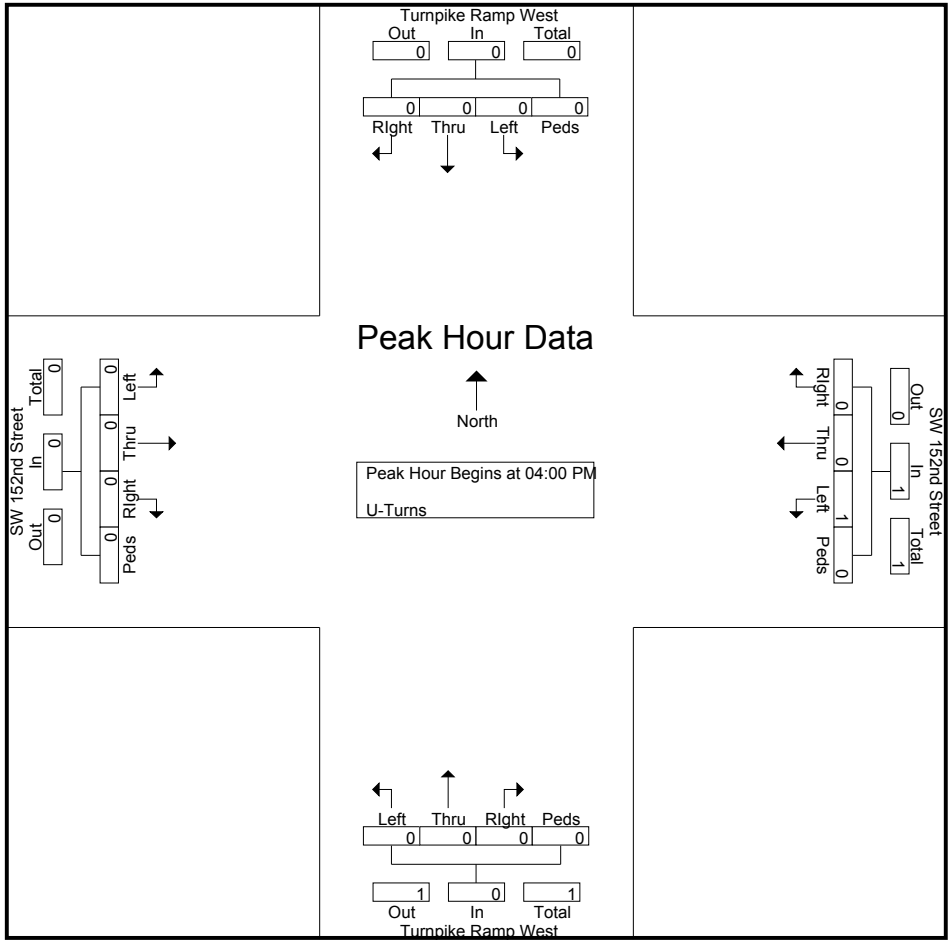

SW 152nd Street & Turnpike Ramp West

File Name : TMC-4 SW 152nd St & Turnpike Ramp West
Site Code : 00000000
Start Date : 5/24/2016
Page No : 1

Groups Printed- Veh - Trucks - Turns

	Turnpike Ramp West Southbound					Turnpike Ramp West Northbound					SW 152nd Street Westbound					SW 152nd Street Eastbound					
Start Time	Left	Thru	RIght	Peds/Bike	App. Total	Left	Thru	RIght	Peds/Bike	App. Total	Left	Thru	RIght	Peds/Bike	App. Total	Left	Thru	RIght	Peds/Bike	App. Total	Int. Total
07:00 AM	63	0	1	0	64	0	0	0	0	0	35	196	0	0	231	0	216	31	1	248	543
07:15 AM	44	1	0	0	45	0	0	0	0	0	65	180	0	0	245	0	291	31	1	323	613
07:30 AM	60	4	0	0	64	0	0	0	1	1	48	180	0	0	228	0	255	46	0	301	594
07:45 AM	48	5	0	0	53	0	0	0	0	0	48	216	0	0	264	0	245	50	0	295	612
Total	215	10	1	0	226	0	0	0	1	1	196	772	0	0	968	0	1007	158	2	1167	2362
08:00 AM	67	3	0	0	70	0	0	0	1	1	41	187	0	0	228	0	266	43	0	309	608
08:15 AM	61	3	1	0	65	0	0	0	0	0	43	176	0	0	219	0	309	48	0	357	641
08:30 AM	79	5	1	0	85	0	0	0	1	1	41	190	0	0	231	0	275	41	0	316	633
08:45 AM	75	3	3	0	81	0	0	0	1	1	39	222	0	0	261	0	294	36	0	330	673
Total	282	14	5	0	301	0	0	0	3	3	164	775	0	0	939	0	1144	168	0	1312	2555
*** BREAK ***																					
11:00 AM	66	3	1	0	70	0	0	0	1	1	38	169	0	0	207	0	208	52	0	260	538
11:15 AM	56	8	1	1	66	0	0	0	0	0	24	185	0	0	209	0	189	42	0	231	506
11:30 AM	64	4	1	0	69	0	0	0	0	0	35	188	0	1	224	0	195	47	0	242	535
11:45 AM	56	3	0	0	59	0	0	0	1	1	38	220	0	0	258	0	216	63	0	279	597
Total	242	18	3	1	264	0	0	0	2	2	135	762	0	1	898	0	808	204	0	1012	2176
12:00 PM	55	2	0	1	58	0	0	0	2	2	29	210	0	2	241	0	236	39	2	277	578
12:15 PM	66	3	1	0	70	0	0	0	0	0	35	211	0	0	246	1	205	46	0	252	568
12:30 PM	66	4	3	0	73	0	0	0	1	1	31	210	0	0	241	0	241	40	0	281	596
12:45 PM	72	3	3	1	79	0	0	0	0	0	33	200	0	0	233	0	209	40	0	249	561
Total	259	12	7	2	280	0	0	0	3	3	128	831	0	2	961	1	891	165	2	1059	2303
*** BREAK ***																					
04:00 PM	85	2	38	1	126	0	0	0	0	0	42	242	0	0	284	0	206	37	0	243	653
04:15 PM	90	3	15	0	108	0	0	0	3	3	44	281	0	0	325	0	244	43	0	287	723
04:30 PM	65	1	22	0	88	0	0	0	0	0	55	279	0	0	334	0	200	32	0	232	654
04:45 PM	89	5	43	0	137	0	0	0	0	0	42	245	0	0	287	0	178	50	0	228	652
Total	329	11	118	1	459	0	0	0	3	3	183	1047	0	0	1230	0	828	162	0	990	2682
05:00 PM	95	4	73	0	172	0	0	0	0	0	56	275	0	0	331	0	228	46	0	274	777
05:15 PM	99	9	66	1	175	0	0	0	0	0	39	282	0	2	323	0	203	41	0	244	742
05:30 PM	86	4	82	0	172	0	0	0	1	1	44	308	0	0	352	0	161	41	0	202	727
05:45 PM	83	3	75	0	161	0	0	0	1	1	41	297	0	0	338	0	176	40	0	216	716
Total	363	20	296	1	680	0	0	0	2	2	180	1162	0	2	1344	0	768	168	0	936	2962
Grand Total	1690	85	430	5	2210	0	0	0	14	14	986	5349	0	5	6340	1	5446	1025	4	6476	15040
Apprch %	76.5	3.8	19.5	0.2		0	0	0	100		15.6	84.4	0	0.1		0	84.1	15.8	0.1		
Total %	11.2	0.6	2.9	0	14.7	0	0	0	0.1	0.1	6.6	35.6	0	0	42.2	0	36.2	6.8	0	43.1	
Veh	1627	81	422	4	2134	0	0	0	4	4	956	5208	0	5	6169	0	5356	979	4	6339	14646
% Veh	96.3	95.3	98.1	80	96.6	0	0	0	28.6	28.6	97	97.4	0	100	97.3	0	98.3	95.5	100	97.9	97.4
Trucks	63	4	8	1	76	0	0	0	10	10	28	141	0	0	169	0	90	46	0	136	391
% Trucks	3.7	4.7	1.9	20	3.4	0	0	0	71.4	71.4	2.8	2.6	0	0	2.7	0	1.7	4.5	0	2.1	2.6

SW 152nd Street & Turnpike Ramp West

File Name : TMC-4 SW 152nd St & Turnpike Ramp West
Site Code : 00000000
Start Date : 5/24/2016
Page No : 2

Groups Printed- Veh - Trucks - Turns

	Turnpike Ramp West Southbound					Turnpike Ramp West Northbound					SW 152nd Street Westbound					SW 152nd Street Eastbound					
	Left	Thru	RIght	Peds/Bike	App. Total	Left	Thru	RIght	Peds/Bike	App. Total	Left	Thru	RIght	Peds/Bike	App. Total	Left	Thru	RIght	Peds/Bike	App. Total	Int. Total
U-Turns	0	0	0	0	0	0	0	0	0	0	2	0	0	0	2	1	0	0	0	1	3
% U-Turns	0	0	0	0	0	0	0	0	0	0	0.2	0	0	0	0	100	0	0	0	0	0

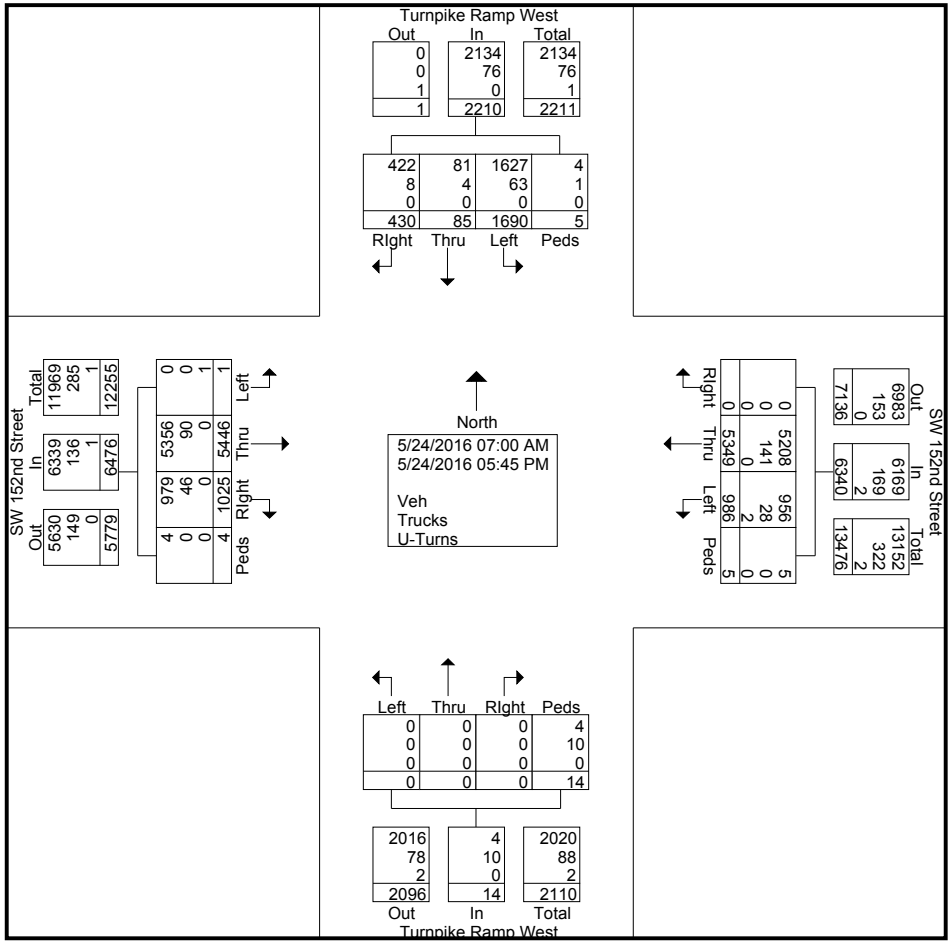

SW 152nd Street & Turnpike Ramp West

File Name : TMC-4 SW 152nd St & Turnpike Ramp West
Site Code : 00000000
Start Date : 5/24/2016
Page No : 3

	Turnpike Ramp West Southbound					Turnpike Ramp West Northbound					SW 152nd Street Westbound					SW 152nd Street Eastbound					
Start Time	Left	Thru	RIght	Peds/Bike	App. Total	Left	Thru	RIght	Peds/Bike	App. Total	Left	Thru	RIght	Peds/Bike	App. Total	Left	Thru	RIght	Peds/Bike	App. Total	Int. Total
Peak Hour Analysis From 07:00 AM to 08:45 AM - Peak 1 of 1																					
Peak Hour for Entire Intersection Begins at 08:00 AM																					
08:00 AM	67	3	0	0	70	0	0	0	**1**	**1**	41	187	0	0	228	0	266	43	0	309	608
08:15 AM	61	3	1	0	65	0	0	0	0	0	**43**	176	0	0	219	0	**309**	**48**	0	**357**	641
08:30 AM	**79**	**5**	1	0	**85**	0	0	0	1	1	41	190	0	0	231	0	275	41	0	316	633
08:45 AM	75	3	**3**	0	81	0	0	0	1	1	39	**222**	0	0	**261**	0	294	36	0	330	**673**
Total Volume	282	14	5	0	301	0	0	0	3	3	164	775	0	0	939	0	1144	168	0	1312	2555
% App. Total	93.7	4.7	1.7	0		0	0	0	100		17.5	82.5	0	0		0	87.2	12.8	0		
PHF	.892	.700	.417	.000	.885	.000	.000	.000	.750	.750	.953	.873	.000	.000	.899	.000	.926	.875	.000	.919	.949

SW 152nd Street & Turnpike Ramp West

File Name : TMC-4 SW 152nd St & Turnpike Ramp West
Site Code : 00000000
Start Date : 5/24/2016
Page No : 4

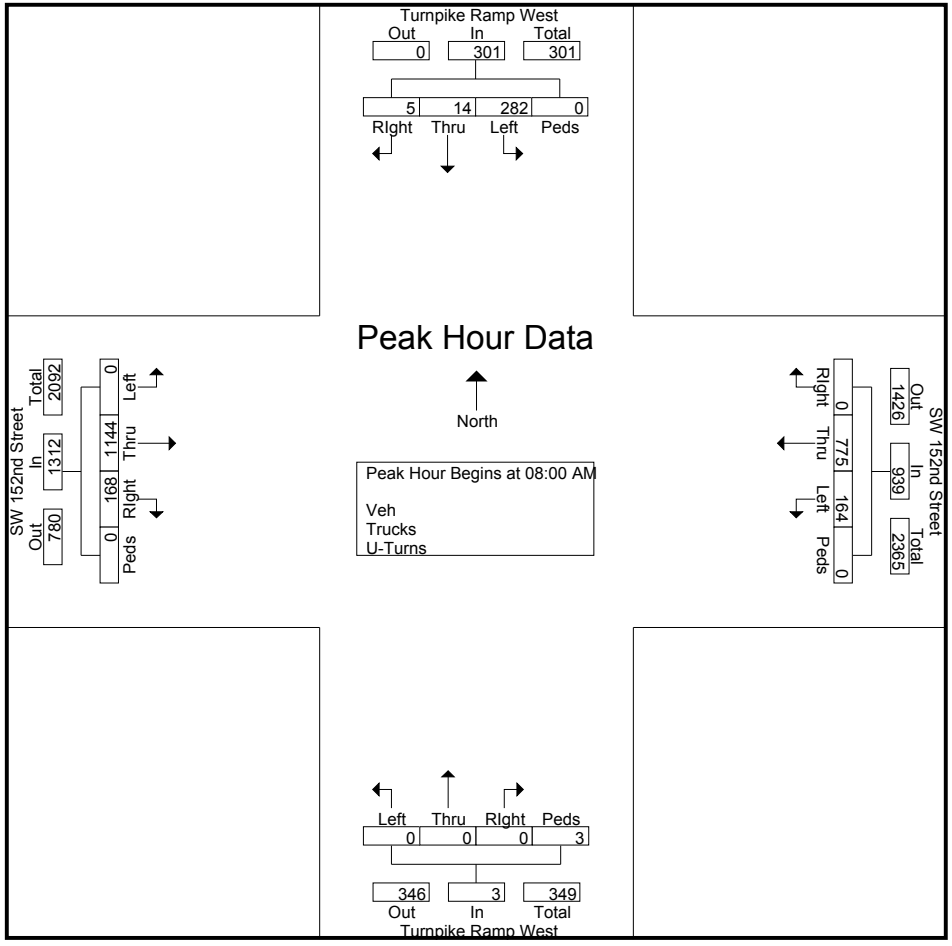

SW 152nd Street & Turnpike Ramp West

File Name : TMC-4 SW 152nd St & Turnpike Ramp West
Site Code : 00000000
Start Date : 5/24/2016
Page No : 5

	Turnpike Ramp West Southbound					Turnpike Ramp West Northbound					SW 152nd Street Westbound					SW 152nd Street Eastbound					
Start Time	Left	Thru	RIght	Peds/Bike	App. Total	Left	Thru	RIght	Peds/Bike	App. Total	Left	Thru	RIght	Peds/Bike	App. Total	Left	Thru	RIght	Peds/Bike	App. Total	Int. Total
Peak Hour Analysis From 11:00 AM to 12:45 PM - Peak 1 of 1																					
Peak Hour for Entire Intersection Begins at 11:45 AM																					
11:45 AM	56	3	0	0	59	0	0	0	1	1	**38**	**220**	0	0	**258**	0	216	**63**	0	279	**597**
12:00 PM	55	2	0	**1**	58	0	0	0	**2**	**2**	29	210	0	**2**	241	0	236	39	**2**	277	578
12:15 PM	**66**	3	1	0	70	0	0	0	0	0	35	211	0	0	246	**1**	205	46	0	252	568
12:30 PM	66	**4**	**3**	0	**73**	0	0	0	1	1	31	210	0	0	241	0	**241**	40	0	**281**	596
Total Volume	243	12	4	1	260	0	0	0	4	4	133	851	0	2	986	1	898	188	2	1089	2339
% App. Total	93.5	4.6	1.5	0.4		0	0	0	100		13.5	86.3	0	0.2		0.1	82.5	17.3	0.2		
PHF	.920	.750	.333	.250	.890	.000	.000	.000	.500	.500	.875	.967	.000	.250	.955	.250	.932	.746	.250	.969	.979

SW 152nd Street & Turnpike Ramp West

File Name : TMC-4 SW 152nd St & Turnpike Ramp West
Site Code : 00000000
Start Date : 5/24/2016
Page No : 6

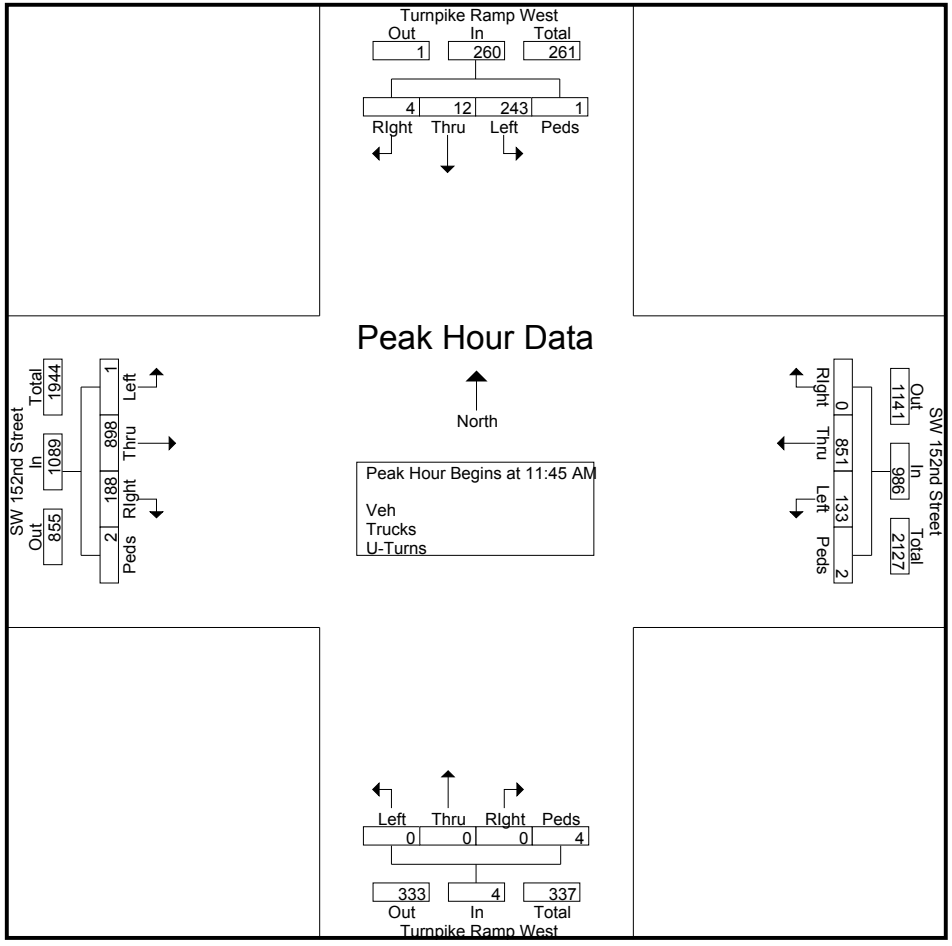

SW 152nd Street & Turnpike Ramp West

File Name : TMC-4 SW 152nd St & Turnpike Ramp West
Site Code : 00000000
Start Date : 5/24/2016
Page No : 7

	Turnpike Ramp West Southbound					Turnpike Ramp West Northbound					SW 152nd Street Westbound					SW 152nd Street Eastbound					
Start Time	Left	Thru	RIght	Peds/Bike	App. Total	Left	Thru	RIght	Peds/Bike	App. Total	Left	Thru	RIght	Peds/Bike	App. Total	Left	Thru	RIght	Peds/Bike	App. Total	Int. Total
Peak Hour Analysis From 04:00 PM to 05:45 PM - Peak 1 of 1																					
Peak Hour for Entire Intersection Begins at 05:00 PM																					
05:00 PM	95	4	73	0	172	0	0	0	0	0	**56**	275	0	0	331	0	**228**	**46**	0	**274**	**777**
05:15 PM	**99**	**9**	66	**1**	**175**	0	0	0	0	0	39	282	0	**2**	323	0	203	41	0	244	742
05:30 PM	86	4	**82**	0	172	0	0	0	**1**	**1**	44	**308**	0	0	**352**	0	161	41	0	202	727
05:45 PM	83	3	75	0	161	0	0	0	1	1	41	297	0	0	338	0	176	40	0	216	716
Total Volume	363	20	296	1	680	0	0	0	2	2	180	1162	0	2	1344	0	768	168	0	936	2962
% App. Total	53.4	2.9	43.5	0.1		0	0	0	100		13.4	86.5	0	0.1		0	82.1	17.9	0		
PHF	.917	.556	.902	.250	.971	.000	.000	.000	.500	.500	.804	.943	.000	.250	.955	.000	.842	.913	.000	.854	.953

SW 152nd Street & Turnpike Ramp West

File Name : TMC-4 SW 152nd St & Turnpike Ramp West
Site Code : 00000000
Start Date : 5/24/2016
Page No : 8

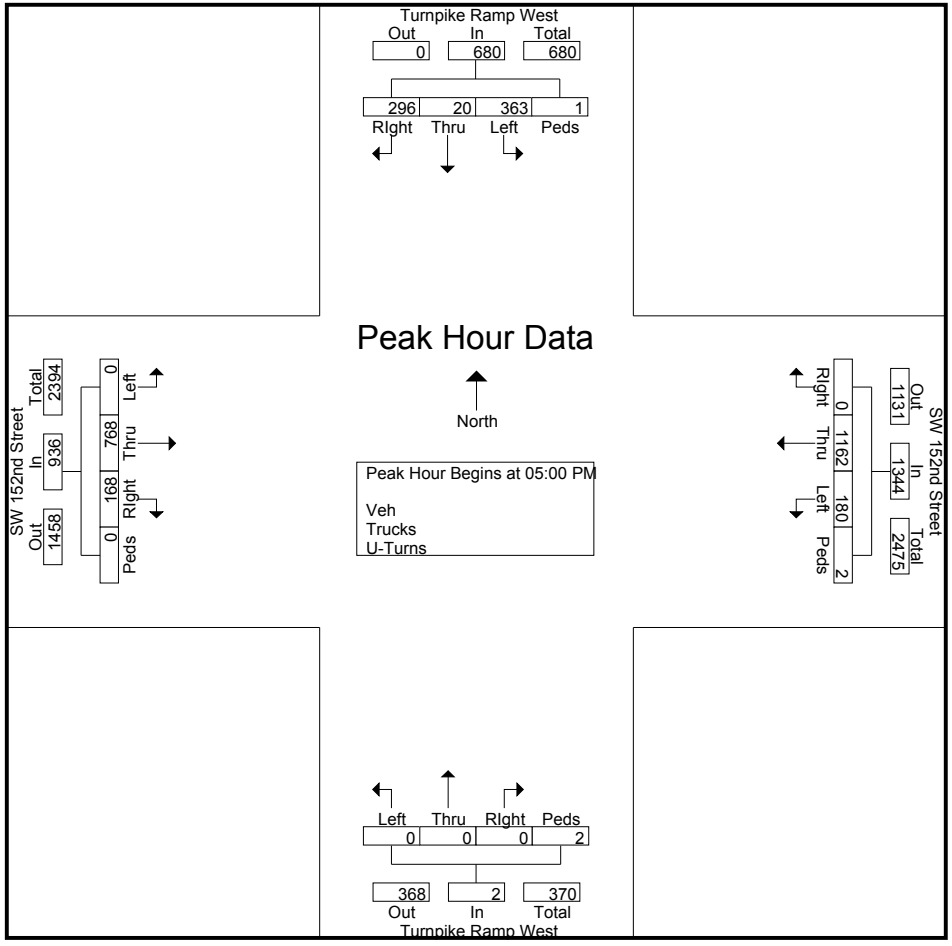

SW 152nd Street & SW 117th Avenue

File Name : SW 152nd Street & SW 117th Avenue
Site Code : 00000000
Start Date : 5/24/2016
Page No : 1

Groups Printed- Trucks

	SW 117th Avenue Southbound					SW 117th Avenue Northbound					SW 152nd Street Westbound					SW 152nd Street Eastbound					
Start Time	Left	Thru	RIght	Bikes	App. Total	Left	Thru	RIght	Bikes	App. Total	Left	Thru	RIght	Bikes	App. Total	Left	Thru	RIght	Bikes	App. Total	Int. Total
07:00 AM	0	4	3	0	7	1	1	1	0	3	0	5	0	0	5	0	2	0	0	2	17
07:15 AM	0	4	3	0	7	0	1	1	0	2	0	3	0	0	3	2	0	0	0	2	14
07:30 AM	1	2	5	0	8	0	1	0	0	1	1	4	0	0	5	0	2	0	0	2	16
07:45 AM	0	1	4	0	5	0	1	0	0	1	3	2	0	0	5	3	7	0	0	10	21
Total	1	11	15	0	27	1	4	2	0	7	4	14	0	0	18	5	11	0	0	16	68
08:00 AM	0	3	8	0	11	2	2	0	0	4	4	1	0	0	5	2	1	1	0	4	24
08:15 AM	2	14	4	0	20	1	2	1	0	4	6	2	0	0	8	3	5	1	0	9	41
08:30 AM	1	5	3	0	9	0	0	3	0	3	9	1	1	0	11	2	3	2	0	7	30
08:45 AM	0	6	0	0	6	0	2	0	0	2	3	3	1	1	8	3	8	7	0	18	34
Total	3	28	15	0	46	3	6	4	0	13	22	7	2	1	32	10	17	11	0	38	129
*** BREAK ***																					
11:00 AM	3	2	3	0	8	3	1	1	0	5	0	4	0	0	4	2	1	1	0	4	21
11:15 AM	2	5	7	0	14	0	1	0	0	1	1	5	0	0	6	1	5	2	0	8	29
11:30 AM	1	3	5	0	9	1	1	1	0	3	1	3	0	0	4	4	2	2	0	8	24
11:45 AM	1	3	8	0	12	1	3	0	0	4	0	3	0	0	3	1	8	3	0	12	31
Total	7	13	23	0	43	5	6	2	0	13	2	15	0	0	17	8	16	8	0	32	105
12:00 PM	0	3	6	0	9	2	2	0	0	4	0	0	0	0	0	2	4	2	0	8	21
12:15 PM	1	0	5	0	6	2	3	0	0	5	0	2	0	0	2	7	2	0	0	9	22
12:30 PM	1	2	5	0	8	0	8	1	0	9	1	3	0	0	4	1	9	0	3	13	34
12:45 PM	0	3	2	0	5	2	2	4	0	8	1	3	0	0	4	4	4	0	1	9	26
Total	2	8	18	0	28	6	15	5	0	26	2	8	0	0	10	14	19	2	4	39	103
*** BREAK ***																					
04:00 PM	0	7	2	0	9	1	3	0	0	4	3	6	0	0	9	3	2	5	0	10	32
04:15 PM	1	4	2	0	7	0	2	0	0	2	3	3	0	0	6	3	5	6	0	14	29
04:30 PM	0	2	2	0	4	0	0	1	0	1	8	1	0	0	9	1	1	11	0	13	27
04:45 PM	1	6	0	0	7	0	0	1	0	1	5	2	0	0	7	0	2	8	0	10	25
Total	2	19	6	0	27	1	5	2	0	8	19	12	0	0	31	7	10	30	0	47	113
05:00 PM	0	1	1	0	2	0	1	0	0	1	5	1	0	0	6	0	3	5	0	8	17
05:15 PM	0	4	0	0	4	0	0	0	0	0	3	2	0	0	5	0	1	1	0	2	11
05:30 PM	0	4	1	0	5	0	2	1	0	3	1	2	0	0	3	0	1	1	0	2	13
05:45 PM	0	0	0	0	0	0	1	0	0	1	1	1	0	0	2	0	1	1	0	2	5
Total	0	9	2	0	11	0	4	1	0	5	10	6	0	0	16	0	6	8	0	14	46
Grand Total	15	88	79	0	182	16	40	16	0	72	59	62	2	1	124	44	79	59	4	186	564
Apprch %	8.2	48.4	43.4	0		22.2	55.6	22.2	0		47.6	50	1.6	0.8		23.7	42.5	31.7	2.2		
Total %	2.7	15.6	14	0	32.3	2.8	7.1	2.8	0	12.8	10.5	11	0.4	0.2	22	7.8	14	10.5	0.7	33	

SW 152nd Street & SW 117th Avenue

File Name : SW 152nd Street & SW 117th Avenue
Site Code : 00000000
Start Date : 5/24/2016
Page No : 2

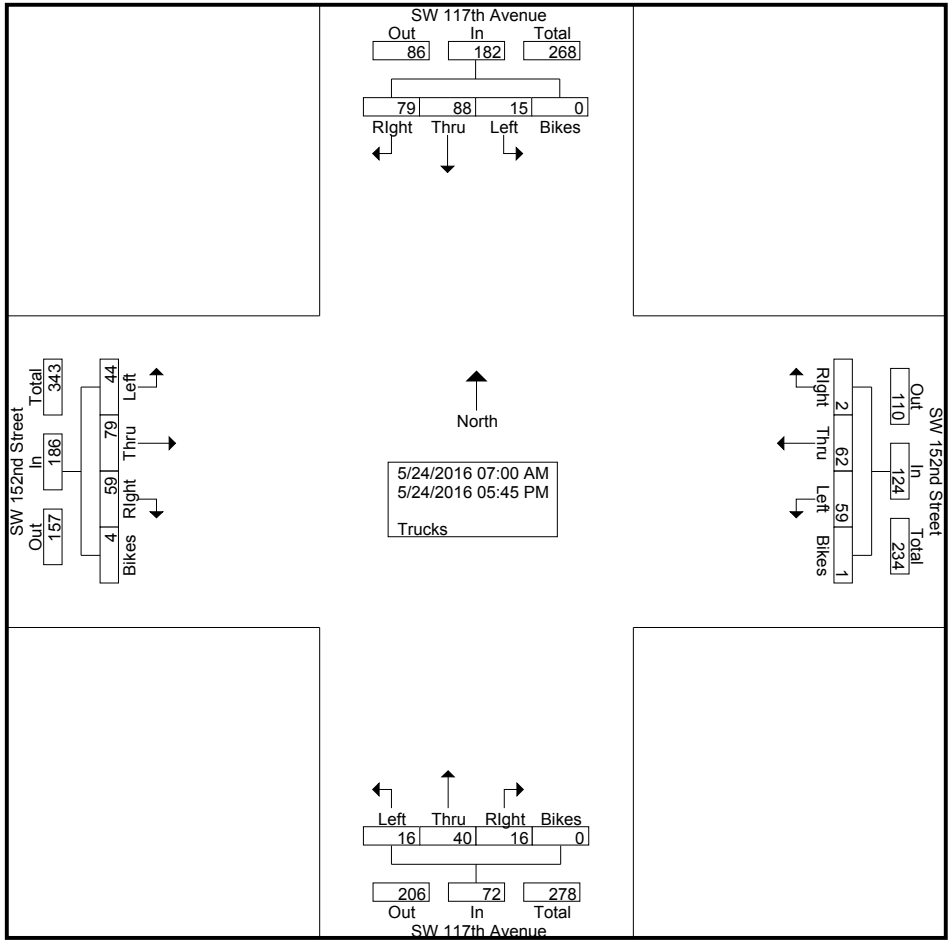

SW 152nd Street & SW 117th Avenue

File Name : SW 152nd Street & SW 117th Avenue
Site Code : 00000000
Start Date : 5/24/2016
Page No : 3

	SW 117th Avenue Southbound					SW 117th Avenue Northbound					SW 152nd Street Westbound					SW 152nd Street Eastbound					
Start Time	Left	Thru	RIght	Bikes	App. Total	Left	Thru	RIght	Bikes	App. Total	Left	Thru	RIght	Bikes	App. Total	Left	Thru	RIght	Bikes	App. Total	Int. Total
Peak Hour Analysis From 07:00 AM to 08:45 AM - Peak 1 of 1																					
Peak Hour for Entire Intersection Begins at 08:00 AM																					
08:00 AM	0	3	**8**	0	11	**2**	**2**	0	0	**4**	4	1	0	0	5	2	1	1	0	4	24
08:15 AM	**2**	**14**	4	0	**20**	1	2	1	0	4	6	2	0	0	8	**3**	5	1	0	9	**41**
08:30 AM	1	5	3	0	9	0	0	**3**	0	3	**9**	1	**1**	0	**11**	2	3	2	0	7	30
08:45 AM	0	6	0	0	6	0	2	0	0	2	3	**3**	1	**1**	8	3	**8**	**7**	0	**18**	34
Total Volume	3	28	15	0	46	3	6	4	0	13	22	7	2	1	32	10	17	11	0	38	129
% App. Total	6.5	60.9	32.6	0		23.1	46.2	30.8	0		68.8	21.9	6.2	3.1		26.3	44.7	28.9	0		
PHF	.375	.500	.469	.000	.575	.375	.750	.333	.000	.813	.611	.583	.500	.250	.727	.833	.531	.393	.000	.528	.787

SW 152nd Street & SW 117th Avenue

File Name : SW 152nd Street & SW 117th Avenue
Site Code : 00000000
Start Date : 5/24/2016
Page No : 4

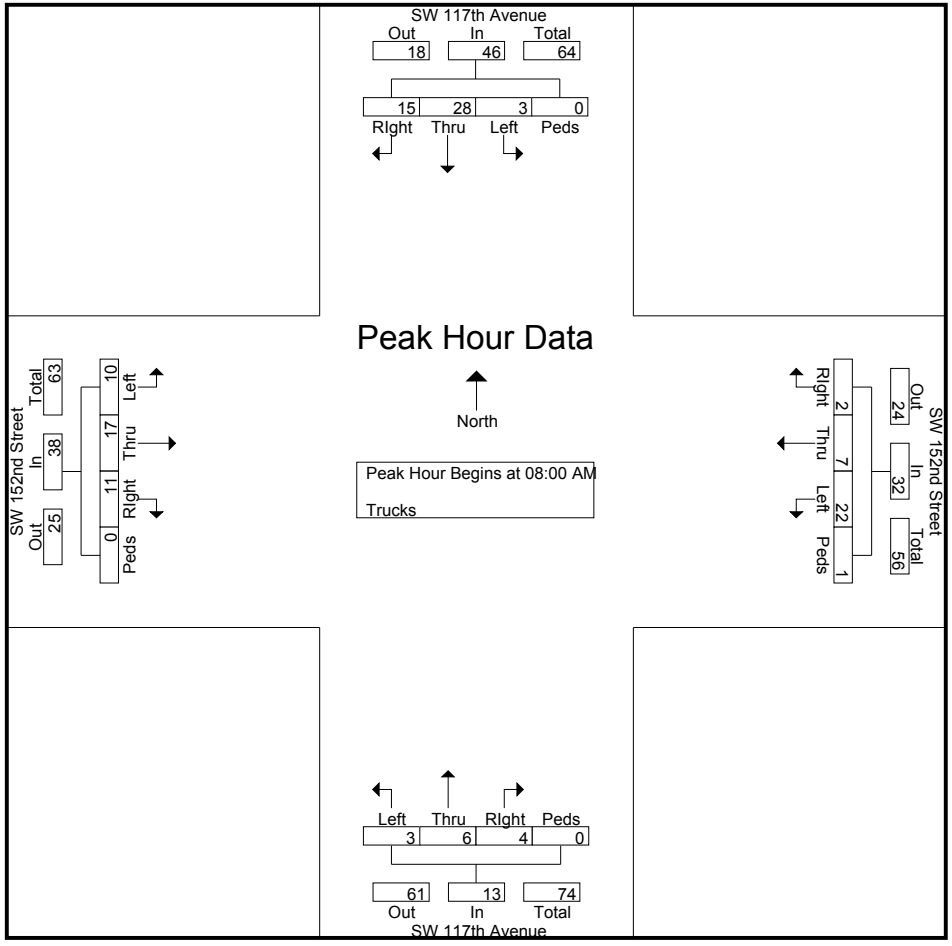

SW 152nd Street & SW 117th Avenue

File Name : SW 152nd Street & SW 117th Avenue
Site Code : 00000000
Start Date : 5/24/2016
Page No : 5

	SW 117th Avenue Southbound					SW 117th Avenue Northbound					SW 152nd Street Westbound					SW 152nd Street Eastbound					
Start Time	Left	Thru	RIght	Bikes	App. Total	Left	Thru	RIght	Bikes	App. Total	Left	Thru	RIght	Bikes	App. Total	Left	Thru	RIght	Bikes	App. Total	Int. Total
Peak Hour Analysis From 11:00 AM to 12:45 PM - Peak 1 of 1																					
Peak Hour for Entire Intersection Begins at 11:45 AM																					
11:45 AM	**1**	**3**	**8**	0	**12**	1	3	0	0	4	0	**3**	0	0	3	1	8	**3**	0	12	31
12:00 PM	0	3	6	0	9	**2**	2	0	0	4	0	0	0	0	0	2	4	2	0	8	21
12:15 PM	1	0	5	0	6	2	3	0	0	5	0	2	0	0	2	**7**	2	0	0	9	22
12:30 PM	1	2	5	0	8	0	**8**	**1**	0	**9**	**1**	3	0	0	**4**	1	**9**	0	**3**	**13**	**34**
Total Volume	3	8	24	0	35	5	16	1	0	22	1	8	0	0	9	11	23	5	3	42	108
% App. Total	8.6	22.9	68.6	0		22.7	72.7	4.5	0		11.1	88.9	0	0		26.2	54.8	11.9	7.1		
PHF	.750	.667	.750	.000	.729	.625	.500	.250	.000	.611	.250	.667	.000	.000	.563	.393	.639	.417	.250	.808	.794

SW 152nd Street & SW 117th Avenue

File Name : SW 152nd Street & SW 117th Avenue
Site Code : 00000000
Start Date : 5/24/2016
Page No : 6

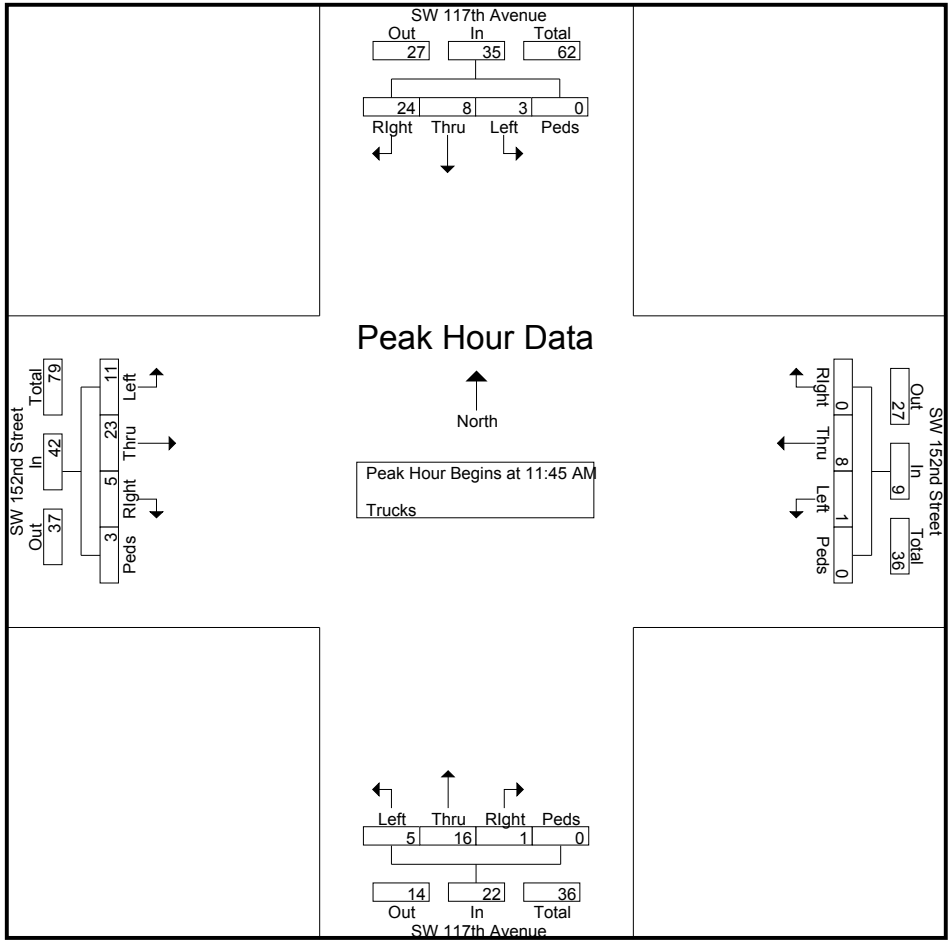

SW 152nd Street & SW 117th Avenue

File Name : SW 152nd Street & SW 117th Avenue
Site Code : 00000000
Start Date : 5/24/2016
Page No : 7

	SW 117th Avenue Southbound					SW 117th Avenue Northbound					SW 152nd Street Westbound					SW 152nd Street Eastbound					
Start Time	Left	Thru	RIght	Bikes	App. Total	Left	Thru	RIght	Bikes	App. Total	Left	Thru	RIght	Bikes	App. Total	Left	Thru	RIght	Bikes	App. Total	Int. Total
Peak Hour Analysis From 04:00 PM to 05:45 PM - Peak 1 of 1																					
Peak Hour for Entire Intersection Begins at 04:00 PM																					
04:00 PM	0	**7**	**2**	0	**9**	**1**	**3**	0	0	**4**	3	**6**	0	0	**9**	**3**	2	5	0	10	**32**
04:15 PM	**1**	4	2	0	7	0	2	0	0	2	3	3	0	0	6	3	**5**	6	0	**14**	29
04:30 PM	0	2	2	0	4	0	0	**1**	0	1	**8**	1	0	0	9	1	1	**11**	0	13	27
04:45 PM	1	6	0	0	7	0	0	1	0	1	5	2	0	0	7	0	2	8	0	10	25
Total Volume	2	19	6	0	27	1	5	2	0	8	19	12	0	0	31	7	10	30	0	47	113
% App. Total	7.4	70.4	22.2	0		12.5	62.5	25	0		61.3	38.7	0	0		14.9	21.3	63.8	0		
PHF	.500	.679	.750	.000	.750	.250	.417	.500	.000	.500	.594	.500	.000	.000	.861	.583	.500	.682	.000	.839	.883

SW 152nd Street & SW 117th Avenue

File Name : SW 152nd Street & SW 117th Avenue
Site Code : 00000000
Start Date : 5/24/2016
Page No : 8

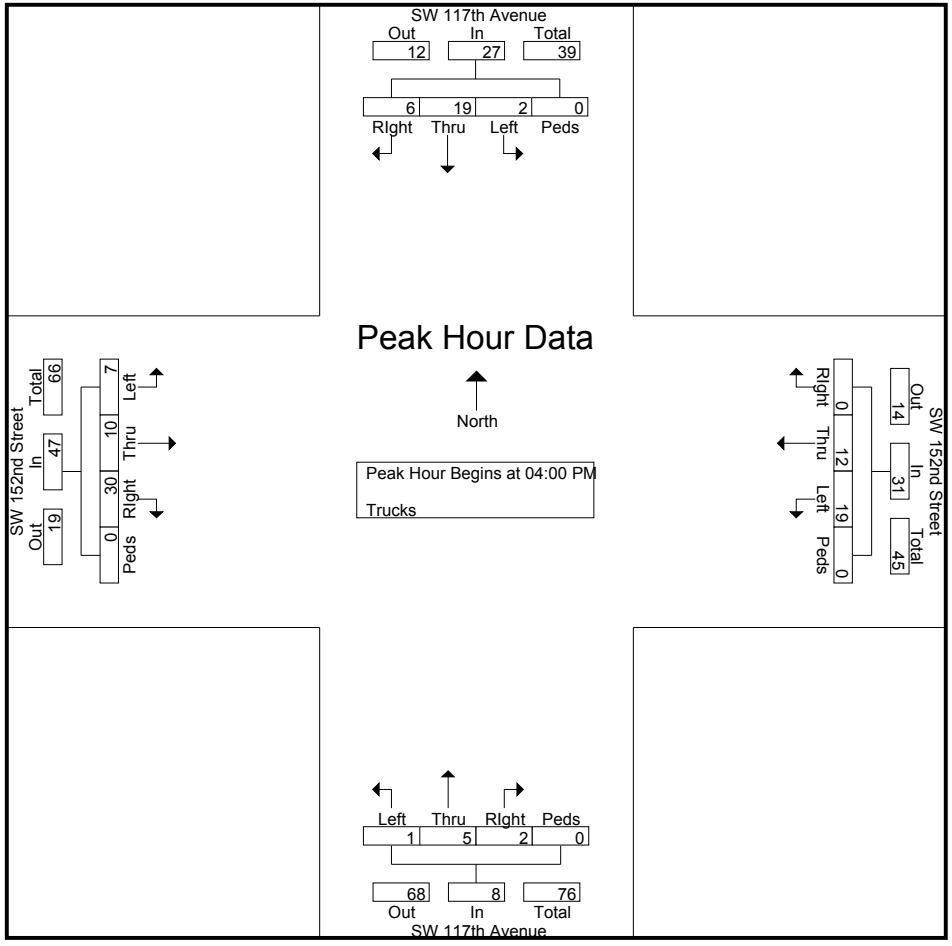

SW 152nd Street & SW 117th Avenue

File Name : SW 152nd Street & SW 117th Avenue
Site Code : 00000000
Start Date : 5/24/2016
Page No : 1

Groups Printed- Turns

	SW 117th Avenue Southbound					SW 117th Avenue Northbound					SW 152nd Street Westbound					SW 152nd Street Eastbound					
Start Time	Left	Thru	RIght	Peds/Bike	App. Total	Left	Thru	RIght	Peds/Bike	App. Total	Left	Thru	RIght	Peds/Bike	App. Total	Left	Thru	RIght	Peds/Bike	App. Total	Int. Total
*** BREAK ***																					
07:45 AM	1	0	0	0	1	0	0	0	0	0	0	0	0	0	0	0	0	0	0	0	1
Total	1	0	0	0	1	0	0	0	0	0	0	0	0	0	0	0	0	0	0	0	1
08:00 AM	0	0	0	0	0	1	0	0	0	1	0	0	0	0	0	0	0	0	0	0	1
08:15 AM	0	0	0	0	0	0	0	0	0	0	2	0	0	0	2	0	0	0	0	0	2
08:30 AM	0	0	0	0	0	0	0	0	0	0	2	0	0	0	2	0	0	0	0	0	2
08:45 AM	0	0	0	0	0	0	0	0	0	0	3	0	0	0	3	0	0	0	0	0	3
Total	0	0	0	0	0	1	0	0	0	1	7	0	0	0	7	0	0	0	0	0	8
*** BREAK ***																					
11:00 AM	0	0	0	0	0	1	0	0	0	1	0	0	0	0	0	1	0	0	0	1	2
11:15 AM	0	0	0	0	0	2	0	0	0	2	2	0	0	0	2	0	0	0	0	0	4
11:30 AM	0	0	0	0	0	1	0	0	0	1	1	0	0	0	1	0	0	0	0	0	2
11:45 AM	0	0	0	0	0	0	0	0	0	0	1	0	0	0	1	0	0	0	0	0	1
Total	0	0	0	0	0	4	0	0	0	4	4	0	0	0	4	1	0	0	0	1	9
12:00 PM	0	0	0	0	0	0	0	0	0	0	1	0	0	0	1	0	0	0	0	0	1
12:15 PM	0	0	0	0	0	0	0	0	0	0	2	0	0	0	2	0	0	0	0	0	2
12:30 PM	0	0	0	0	0	0	0	0	0	0	4	0	0	0	4	1	0	0	0	1	5
12:45 PM	1	0	0	0	1	0	0	0	0	0	2	0	0	0	2	1	0	0	0	1	4
Total	1	0	0	0	1	0	0	0	0	0	9	0	0	0	9	2	0	0	0	2	12
*** BREAK ***																					
04:00 PM	0	0	0	0	0	0	0	0	0	0	1	0	0	0	1	0	0	0	0	0	1
04:15 PM	0	0	0	0	0	0	0	0	0	0	7	0	0	0	7	0	0	0	0	0	7
04:30 PM	0	0	0	0	0	1	0	0	0	1	0	0	0	0	0	0	0	0	0	0	1
04:45 PM	0	0	0	0	0	0	0	0	0	0	6	0	0	0	6	1	0	0	0	1	7
Total	0	0	0	0	0	1	0	0	0	1	14	0	0	0	14	1	0	0	0	1	16
05:00 PM	0	0	0	0	0	0	0	0	0	0	4	0	0	0	4	0	0	0	0	0	4
05:15 PM	0	0	0	0	0	0	0	0	0	0	4	0	0	0	4	0	0	0	0	0	4
05:30 PM	0	0	0	0	0	1	0	0	0	1	1	0	0	0	1	0	0	0	0	0	2
05:45 PM	0	0	0	0	0	0	0	0	0	0	1	0	0	0	1	0	0	0	0	0	1
Total	0	0	0	0	0	1	0	0	0	1	10	0	0	0	10	0	0	0	0	0	11
Grand Total	2	0	0	0	2	7	0	0	0	7	44	0	0	0	44	4	0	0	0	4	57
Apprch %	100	0	0	0		100	0	0	0		100	0	0	0		100	0	0	0		
Total %	3.5	0	0	0	3.5	12.3	0	0	0	12.3	77.2	0	0	0	77.2	7	0	0	0	7	

SW 152nd Street & SW 117th Avenue

File Name : SW 152nd Street & SW 117th Avenue
Site Code : 00000000
Start Date : 5/24/2016
Page No : 2

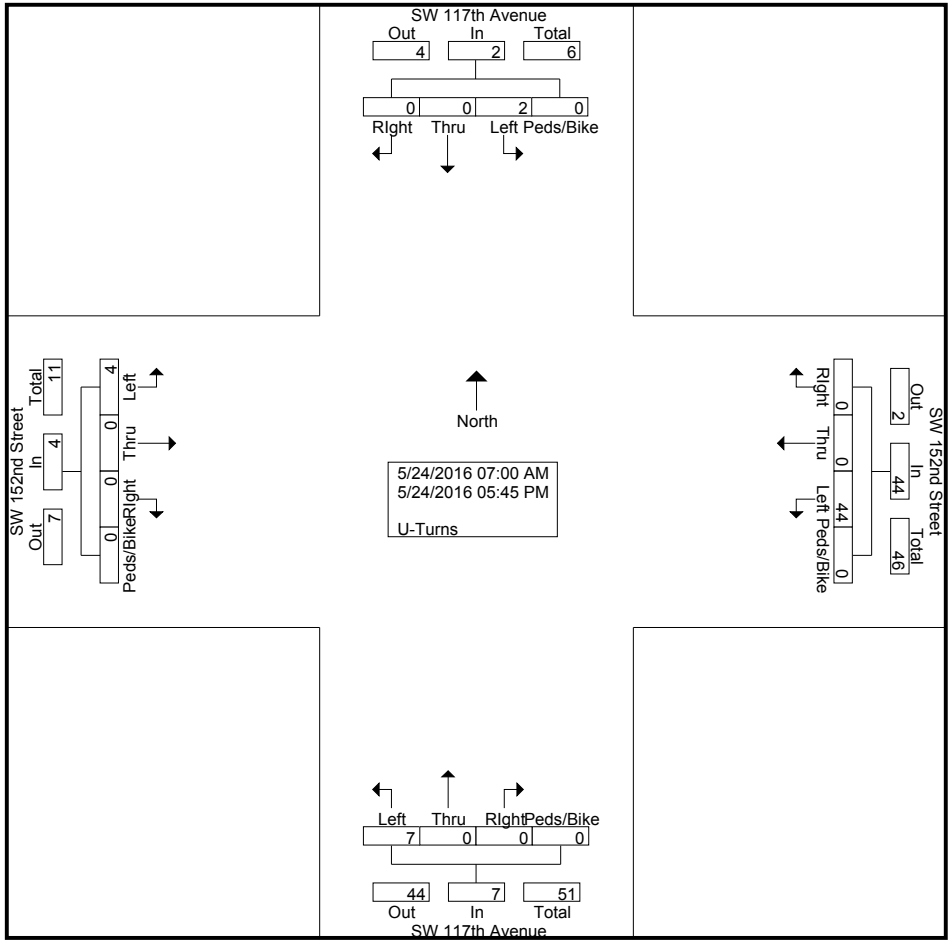

SW 152nd Street & SW 117th Avenue

File Name : SW 152nd Street & SW 117th Avenue
Site Code : 00000000
Start Date : 5/24/2016
Page No : 3

	SW 117th Avenue Southbound					SW 117th Avenue Northbound					SW 152nd Street Westbound					SW 152nd Street Eastbound					
Start Time	Left	Thru	RIght	Peds/Bike	App. Total	Left	Thru	RIght	Peds/Bike	App. Total	Left	Thru	RIght	Peds/Bike	App. Total	Left	Thru	RIght	Peds/Bike	App. Total	Int. Total
Peak Hour Analysis From 07:00 AM to 08:45 AM - Peak 1 of 1																					
Peak Hour for Entire Intersection Begins at 08:00 AM																					
08:00 AM	0	0	0	0	0	**1**	0	0	0	**1**	0	0	0	0	0	0	0	0	0	0	1
08:15 AM	0	0	0	0	0	0	0	0	0	0	2	0	0	0	2	0	0	0	0	0	2
08:30 AM	0	0	0	0	0	0	0	0	0	0	2	0	0	0	2	0	0	0	0	0	2
08:45 AM	0	0	0	0	0	0	0	0	0	0	**3**	0	0	0	**3**	0	0	0	0	0	**3**
Total Volume	0	0	0	0	0	1	0	0	0	1	7	0	0	0	7	0	0	0	0	0	8
% App. Total	0	0	0	0		100	0	0	0		100	0	0	0		0	0	0	0		
PHF	.000	.000	.000	.000	.000	.250	.000	.000	.000	.250	.583	.000	.000	.000	.583	.000	.000	.000	.000	.000	.667

SW 152nd Street & SW 117th Avenue

File Name : SW 152nd Street & SW 117th Avenue
Site Code : 00000000
Start Date : 5/24/2016
Page No : 4

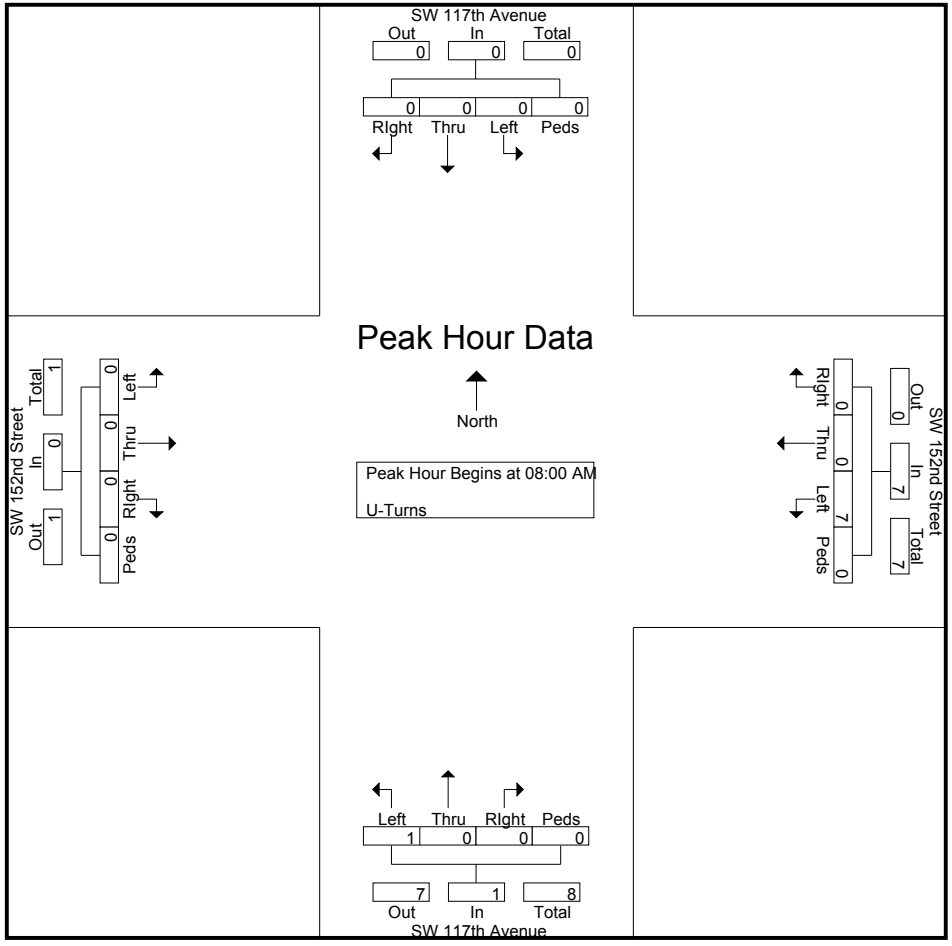

SW 152nd Street & SW 117th Avenue

File Name : SW 152nd Street & SW 117th Avenue
Site Code : 00000000
Start Date : 5/24/2016
Page No : 5

	SW 117th Avenue Southbound					SW 117th Avenue Northbound					SW 152nd Street Westbound					SW 152nd Street Eastbound					
Start Time	Left	Thru	RIght	Peds/Bike	App. Total	Left	Thru	RIght	Peds/Bike	App. Total	Left	Thru	RIght	Peds/Bike	App. Total	Left	Thru	RIght	Peds/Bike	App. Total	Int. Total
Peak Hour Analysis From 11:00 AM to 12:45 PM - Peak 1 of 1																					
Peak Hour for Entire Intersection Begins at 12:00 PM																					
12:00 PM	0	0	0	0	0	0	0	0	0	0	1	0	0	0	1	0	0	0	0	0	1
12:15 PM	0	0	0	0	0	0	0	0	0	0	2	0	0	0	2	0	0	0	0	0	2
12:30 PM	0	0	0	0	0	0	0	0	0	0	**4**	0	0	0	**4**	**1**	0	0	0	**1**	**5**
12:45 PM	**1**	0	0	0	**1**	0	0	0	0	0	2	0	0	0	2	1	0	0	0	1	4
Total Volume	1	0	0	0	1	0	0	0	0	0	9	0	0	0	9	2	0	0	0	2	12
% App. Total	100	0	0	0		0	0	0	0		100	0	0	0		100	0	0	0		
PHF	.250	.000	.000	.000	.250	.000	.000	.000	.000	.000	.563	.000	.000	.000	.563	.500	.000	.000	.000	.500	.600

SW 152nd Street & SW 117th Avenue

File Name : SW 152nd Street & SW 117th Avenue
Site Code : 00000000
Start Date : 5/24/2016
Page No : 6

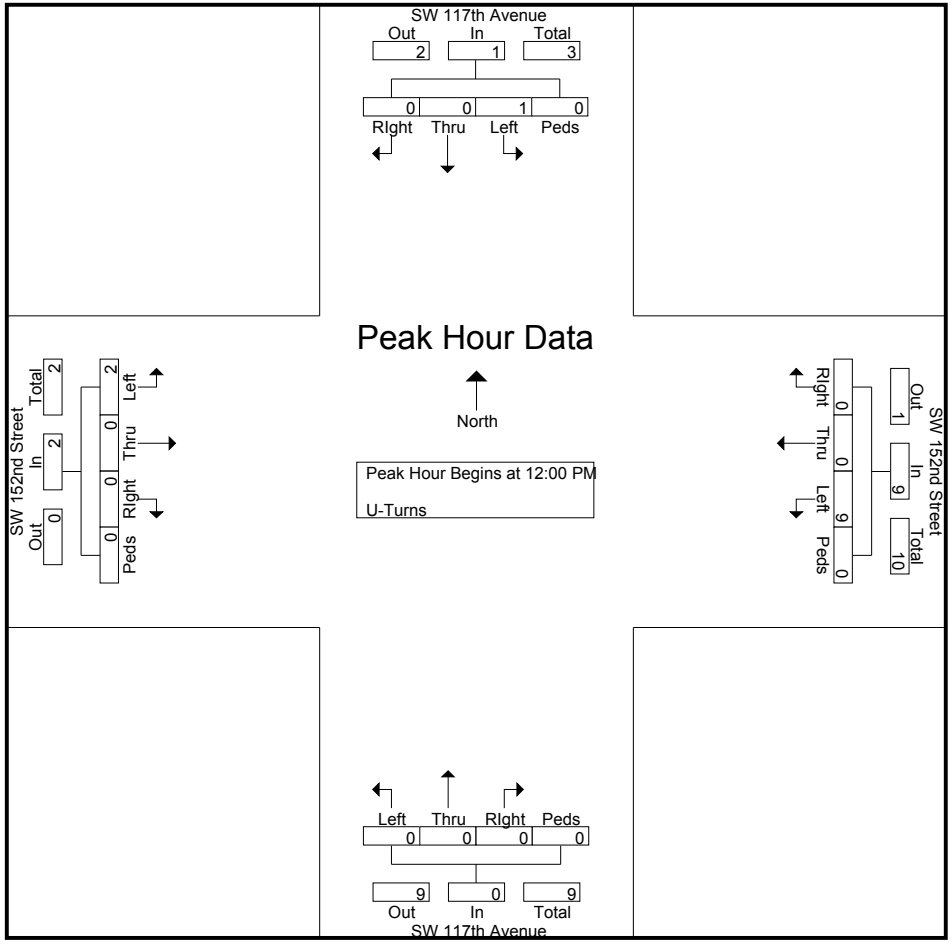

SW 152nd Street & SW 117th Avenue

File Name : SW 152nd Street & SW 117th Avenue
Site Code : 00000000
Start Date : 5/24/2016
Page No : 7

	SW 117th Avenue Southbound					SW 117th Avenue Northbound					SW 152nd Street Westbound					SW 152nd Street Eastbound					
Start Time	Left	Thru	RIght	Peds/Bike	App. Total	Left	Thru	RIght	Peds/Bike	App. Total	Left	Thru	RIght	Peds/Bike	App. Total	Left	Thru	RIght	Peds/Bike	App. Total	Int. Total
Peak Hour Analysis From 04:00 PM to 05:45 PM - Peak 1 of 1																					
Peak Hour for Entire Intersection Begins at 04:15 PM																					
04:15 PM	0	0	0	0	0	0	0	0	0	0	**7**	0	0	0	**7**	0	0	0	0	0	**7**
04:30 PM	0	0	0	0	0	**1**	0	0	0	**1**	0	0	0	0	0	0	0	0	0	0	1
04:45 PM	0	0	0	0	0	0	0	0	0	0	6	0	0	0	6	**1**	0	0	0	**1**	7
05:00 PM	0	0	0	0	0	0	0	0	0	0	4	0	0	0	4	0	0	0	0	0	4
Total Volume	0	0	0	0	0	1	0	0	0	1	17	0	0	0	17	1	0	0	0	1	19
% App. Total	0	0	0	0		100	0	0	0		100	0	0	0		100	0	0	0		
PHF	.000	.000	.000	.000	.000	.250	.000	.000	.000	.250	.607	.000	.000	.000	.607	.250	.000	.000	.000	.250	.679

SW 152nd Street & SW 117th Avenue

File Name : SW 152nd Street & SW 117th Avenue
Site Code : 00000000
Start Date : 5/24/2016
Page No : 8

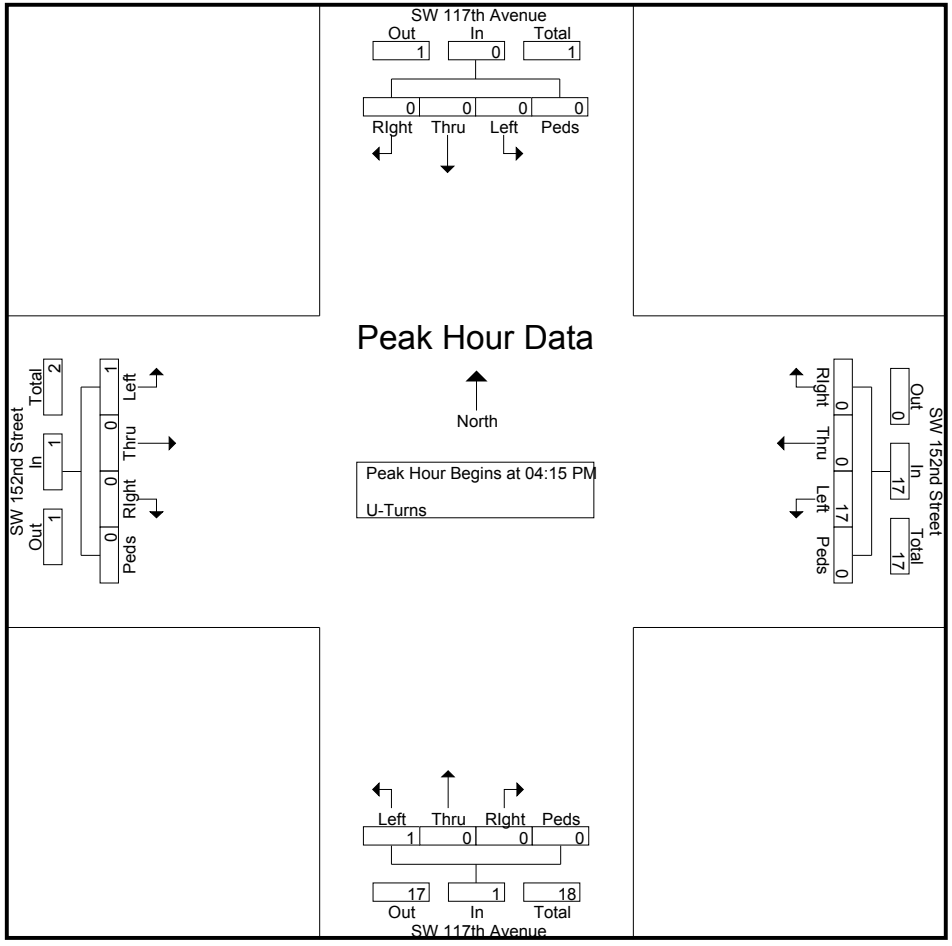

SW 152nd Street & SW 117th Avenue

File Name : SW 152nd Street & SW 117th Avenue
Site Code : 00000000
Start Date : 5/24/2016
Page No : 1

Groups Printed- Veh - Trucks - Turns

	SW 117th Avenue Southbound					SW 117th Avenue Northbound					SW 152nd Street Westbound					SW 152nd Street Eastbound					
Start Time	Left	Thru	RIght	Peds/Bike	App. Total	Left	Thru	RIght	Peds/Bike	App. Total	Left	Thru	RIght	Peds/Bike	App. Total	Left	Thru	RIght	Peds/Bike	App. Total	Int. Total
07:00 AM	24	102	129	0	255	35	219	11	0	265	17	158	4	0	179	247	209	26	0	482	1181
07:15 AM	21	61	164	0	246	25	192	19	0	236	18	177	10	0	205	396	322	31	0	749	1436
07:30 AM	39	109	182	0	330	51	236	17	0	304	17	171	15	0	203	293	212	27	0	532	1369
07:45 AM	30	84	205	0	319	39	193	20	4	256	18	173	20	0	211	301	265	10	0	576	1362
Total	114	356	680	0	1150	150	840	67	4	1061	70	679	49	0	798	1237	1008	94	0	2339	5348
08:00 AM	32	111	202	0	345	76	223	25	0	324	18	185	13	0	216	292	229	44	1	566	1451
08:15 AM	32	105	198	0	335	45	158	29	0	232	21	166	10	0	197	389	299	34	0	722	1486
08:30 AM	33	103	244	0	380	69	225	23	1	318	28	162	14	0	204	324	243	26	0	593	1495
08:45 AM	35	87	270	0	392	47	151	34	0	232	26	197	18	1	242	308	251	63	0	622	1488
Total	132	406	914	0	1452	237	757	111	1	1106	93	710	55	1	859	1313	1022	167	1	2503	5920
*** BREAK ***																					
11:00 AM	45	78	173	0	296	44	87	25	0	156	16	175	7	0	198	218	189	38	0	445	1095
11:15 AM	43	111	197	0	351	48	83	34	0	165	35	182	5	0	222	215	162	46	0	423	1161
11:30 AM	41	122	174	0	337	55	119	32	0	206	22	186	8	0	216	194	177	59	0	430	1189
11:45 AM	32	104	178	0	314	54	89	36	0	179	23	199	10	0	232	190	187	52	0	429	1154
Total	161	415	722	0	1298	201	378	127	0	706	96	742	30	0	868	817	715	195	0	1727	4599
12:00 PM	33	87	196	0	316	60	101	30	0	191	37	171	8	1	217	181	207	31	0	419	1143
12:15 PM	55	83	203	1	342	61	100	43	0	204	38	161	2	2	203	202	184	56	0	442	1191
12:30 PM	31	88	208	0	327	55	111	37	0	203	25	216	13	0	254	172	202	28	3	405	1189
12:45 PM	44	140	205	0	389	44	85	32	0	161	43	171	8	0	222	157	193	52	1	403	1175
Total	163	398	812	1	1374	220	397	142	0	759	143	719	31	3	896	712	786	167	4	1669	4698
*** BREAK ***																					
04:00 PM	21	149	243	0	413	48	105	24	0	177	37	268	7	0	312	150	204	68	0	422	1324
04:15 PM	27	151	240	0	418	52	123	31	0	206	68	236	3	0	307	151	229	80	0	460	1391
04:30 PM	25	162	206	0	393	44	115	32	0	191	38	269	6	0	313	129	178	72	0	379	1276
04:45 PM	21	141	216	0	378	53	108	32	0	193	41	273	5	0	319	157	160	54	0	371	1261
Total	94	603	905	0	1602	197	451	119	0	767	184	1046	21	0	1251	587	771	274	0	1632	5252
05:00 PM	20	165	242	0	427	49	116	36	0	201	57	300	2	0	359	153	219	92	0	464	1451
05:15 PM	25	155	289	0	469	50	128	31	0	209	50	329	8	0	387	170	185	70	0	425	1490
05:30 PM	20	156	252	0	428	58	101	27	0	186	42	335	8	0	385	132	155	77	0	364	1363
05:45 PM	22	171	319	0	512	49	133	20	0	202	48	343	4	0	395	147	186	63	0	396	1505
Total	87	647	1102	0	1836	206	478	114	0	798	197	1307	22	0	1526	602	745	302	0	1649	5809
Grand Total	751	2825	5135	1	8712	1211	3301	680	5	5197	783	5203	208	4	6198	5268	5047	1199	5	11519	31626
Apprch %	8.6	32.4	58.9	0		23.3	63.5	13.1	0.1		12.6	83.9	3.4	0.1		45.7	43.8	10.4	0		
Total %	2.4	8.9	16.2	0	27.5	3.8	10.4	2.2	0	16.4	2.5	16.5	0.7	0	19.6	16.7	16	3.8	0	36.4	
Veh	734	2737	5056	1	8528	1188	3261	664	5	5118	680	5141	206	3	6030	5220	4968	1140	1	11329	31005
% Veh	97.7	96.9	98.5	100	97.9	98.1	98.8	97.6	100	98.5	86.8	98.8	99	75	97.3	99.1	98.4	95.1	20	98.4	98
Trucks	15	88	79	0	182	16	40	16	0	72	59	62	2	1	124	44	79	59	4	186	564
% Trucks	2	3.1	1.5	0	2.1	1.3	1.2	2.4	0	1.4	7.5	1.2	1	25	2	0.8	1.6	4.9	80	1.6	1.8

SW 152nd Street & SW 117th Avenue

File Name : SW 152nd Street & SW 117th Avenue
Site Code : 00000000
Start Date : 5/24/2016
Page No : 2

Groups Printed- Veh - Trucks - Turns

	SW 117th Avenue Southbound					SW 117th Avenue Northbound					SW 152nd Street Westbound					SW 152nd Street Eastbound					
	Left	Thru	RIght	Peds/Bike	App. Total	Left	Thru	RIght	Peds/Bike	App. Total	Left	Thru	RIght	Peds/Bike	App. Total	Left	Thru	RIght	Peds/Bike	App. Total	Int. Total
U-Turns	2	0	0	0	2	7	0	0	0	7	44	0	0	0	44	4	0	0	0	4	57
% U-Turns	0.3	0	0	0	0	0.6	0	0	0	0.1	5.6	0	0	0	0.7	0.1	0	0	0	0	0.2

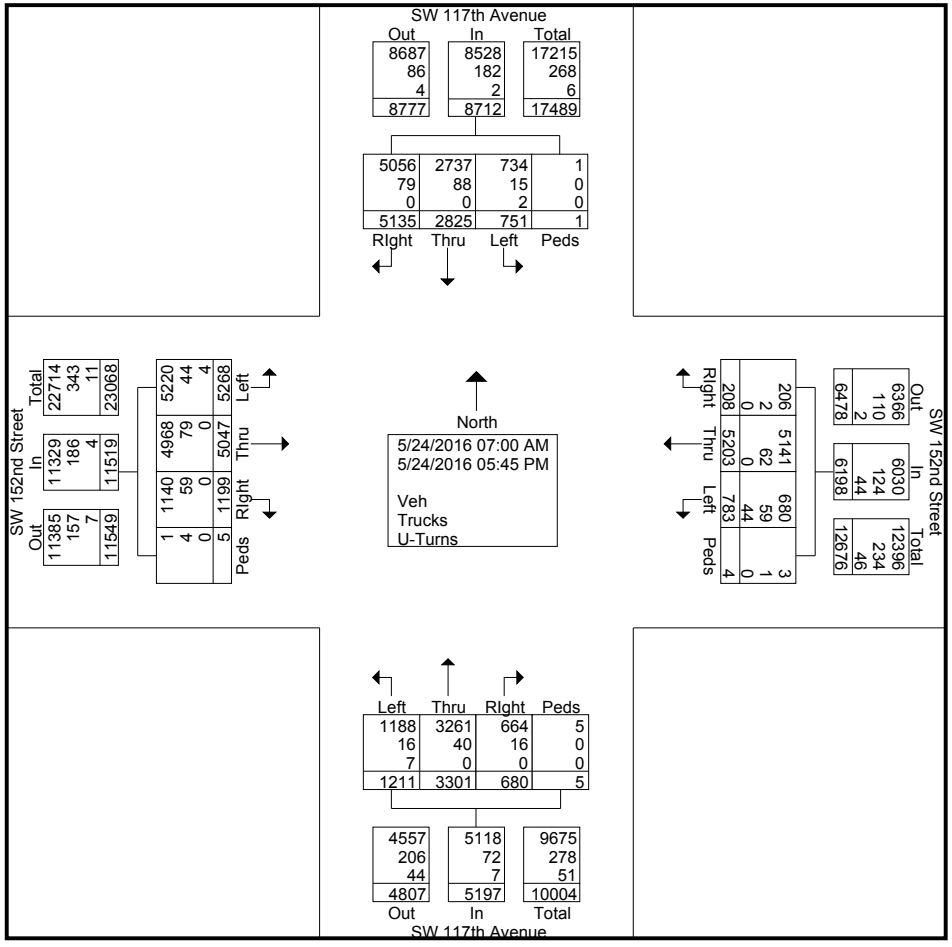

SW 152nd Street & SW 117th Avenue

File Name : SW 152nd Street & SW 117th Avenue
Site Code : 00000000
Start Date : 5/24/2016
Page No : 3

	SW 117th Avenue Southbound					SW 117th Avenue Northbound					SW 152nd Street Westbound					SW 152nd Street Eastbound					
Start Time	Left	Thru	RIght	Peds/Bike	App. Total	Left	Thru	RIght	Peds/Bike	App. Total	Left	Thru	RIght	Peds/Bike	App. Total	Left	Thru	RIght	Peds/Bike	App. Total	Int. Total
Peak Hour Analysis From 07:00 AM to 08:45 AM - Peak 1 of 1																					
Peak Hour for Entire Intersection Begins at 08:00 AM																					
08:00 AM	32	**111**	202	0	345	**76**	223	25	0	**324**	18	185	13	0	216	292	229	44	**1**	566	1451
08:15 AM	32	105	198	0	335	45	158	29	0	232	21	166	10	0	197	**389**	**299**	34	0	**722**	1486
08:30 AM	33	103	244	0	380	69	**225**	23	**1**	318	**28**	162	14	0	204	324	243	26	0	593	**1495**
08:45 AM	**35**	87	**270**	0	**392**	47	151	**34**	0	232	26	**197**	**18**	**1**	**242**	308	251	**63**	0	622	1488
Total Volume	132	406	914	0	1452	237	757	111	1	1106	93	710	55	1	859	1313	1022	167	1	2503	5920
% App. Total	9.1	28	62.9	0		21.4	68.4	10	0.1		10.8	82.7	6.4	0.1		52.5	40.8	6.7	0		
PHF	.943	.914	.846	.000	.926	.780	.841	.816	.250	.853	.830	.901	.764	.250	.887	.844	.855	.663	.250	.867	.990

SW 152nd Street & SW 117th Avenue

File Name : SW 152nd Street & SW 117th Avenue
Site Code : 00000000
Start Date : 5/24/2016
Page No : 4

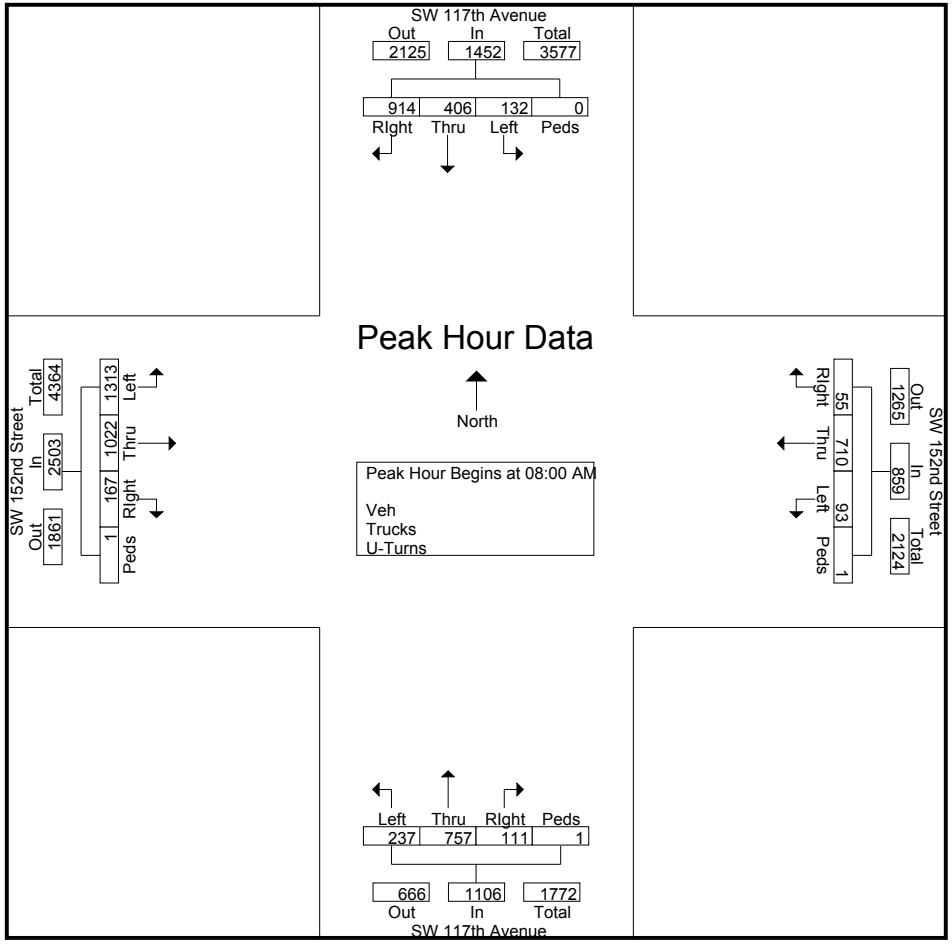

SW 152nd Street & SW 117th Avenue

File Name : SW 152nd Street & SW 117th Avenue
Site Code : 00000000
Start Date : 5/24/2016
Page No : 5

	SW 117th Avenue Southbound					SW 117th Avenue Northbound					SW 152nd Street Westbound					SW 152nd Street Eastbound					
Start Time	Left	Thru	RIght	Peds/Bike	App. Total	Left	Thru	RIght	Peds/Bike	App. Total	Left	Thru	RIght	Peds/Bike	App. Total	Left	Thru	RIght	Peds/Bike	App. Total	Int. Total
Peak Hour Analysis From 11:00 AM to 12:45 PM - Peak 1 of 1																					
Peak Hour for Entire Intersection Begins at 12:00 PM																					
12:00 PM	33	87	196	0	316	60	101	30	0	191	37	171	8	1	217	181	**207**	31	0	419	1143
12:15 PM	**55**	83	203	**1**	342	**61**	100	**43**	0	**204**	38	161	2	**2**	203	**202**	184	**56**	0	**442**	**1191**
12:30 PM	31	88	**208**	0	327	55	**111**	37	0	203	25	**216**	**13**	0	**254**	172	202	28	**3**	405	1189
12:45 PM	44	**140**	205	0	**389**	44	85	32	0	161	**43**	171	8	0	222	157	193	52	1	403	1175
Total Volume	163	398	812	1	1374	220	397	142	0	759	143	719	31	3	896	712	786	167	4	1669	4698
% App. Total	11.9	29	59.1	0.1		29	52.3	18.7	0		16	80.2	3.5	0.3		42.7	47.1	10	0.2		
PHF	.741	.711	.976	.250	.883	.902	.894	.826	.000	.930	.831	.832	.596	.375	.882	.881	.949	.746	.333	.944	.986

SW 152nd Street & SW 117th Avenue

File Name : SW 152nd Street & SW 117th Avenue
Site Code : 00000000
Start Date : 5/24/2016
Page No : 6

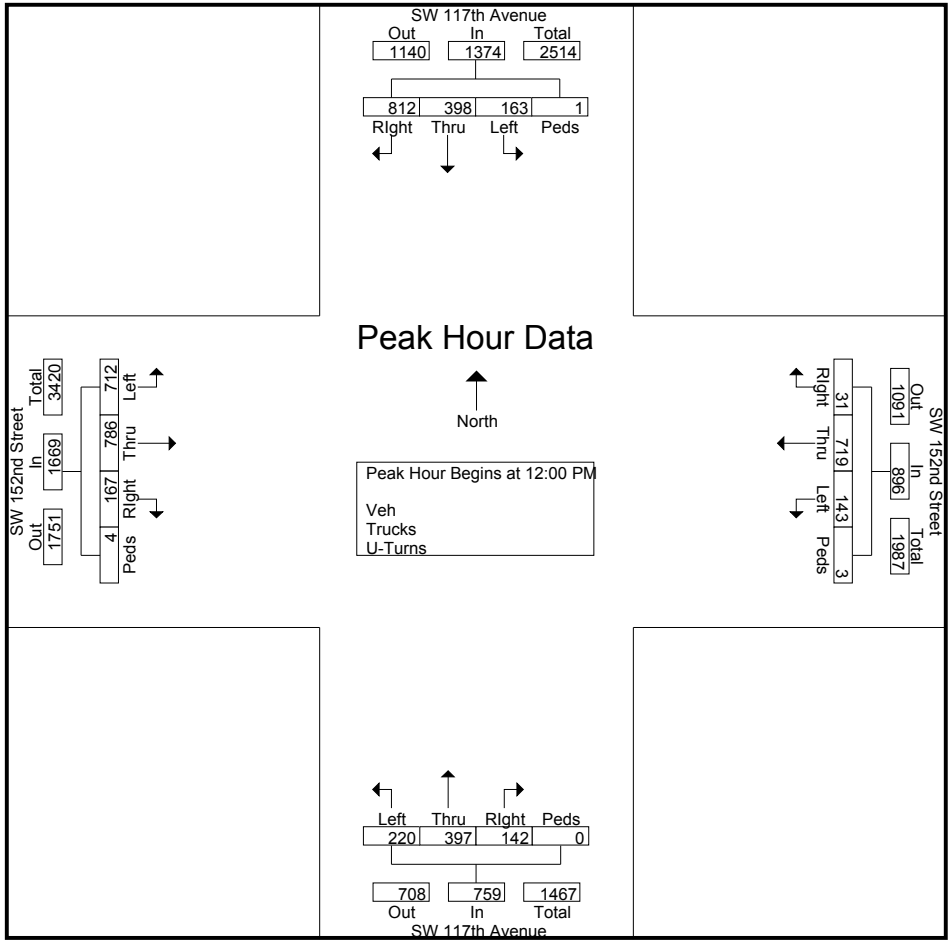

SW 152nd Street & SW 117th Avenue

File Name : SW 152nd Street & SW 117th Avenue
Site Code : 00000000
Start Date : 5/24/2016
Page No : 7

	SW 117th Avenue Southbound					SW 117th Avenue Northbound					SW 152nd Street Westbound					SW 152nd Street Eastbound					
Start Time	Left	Thru	RIght	Peds/Bike	App. Total	Left	Thru	RIght	Peds/Bike	App. Total	Left	Thru	RIght	Peds/Bike	App. Total	Left	Thru	RIght	Peds/Bike	App. Total	Int. Total
Peak Hour Analysis From 04:00 PM to 05:45 PM - Peak 1 of 1																					
Peak Hour for Entire Intersection Begins at 05:00 PM																					
05:00 PM	20	165	242	0	427	49	116	**36**	0	201	**57**	300	2	0	359	153	**219**	**92**	0	**464**	1451
05:15 PM	**25**	155	289	0	469	50	128	31	0	**209**	50	329	**8**	0	387	**170**	185	70	0	425	1490
05:30 PM	20	156	252	0	428	**58**	101	27	0	186	42	335	8	0	385	132	155	77	0	364	1363
05:45 PM	22	**171**	**319**	0	**512**	49	**133**	20	0	202	48	**343**	4	0	**395**	147	186	63	0	396	**1505**
Total Volume	87	647	1102	0	1836	206	478	114	0	798	197	1307	22	0	1526	602	745	302	0	1649	5809
% App. Total	4.7	35.2	60	0		25.8	59.9	14.3	0		12.9	85.6	1.4	0		36.5	45.2	18.3	0		
PHF	.870	.946	.864	.000	.896	.888	.898	.792	.000	.955	.864	.953	.688	.000	.966	.885	.850	.821	.000	.888	.965

SW 152nd Street & SW 117th Avenue

File Name : SW 152nd Street & SW 117th Avenue
Site Code : 00000000
Start Date : 5/24/2016
Page No : 8

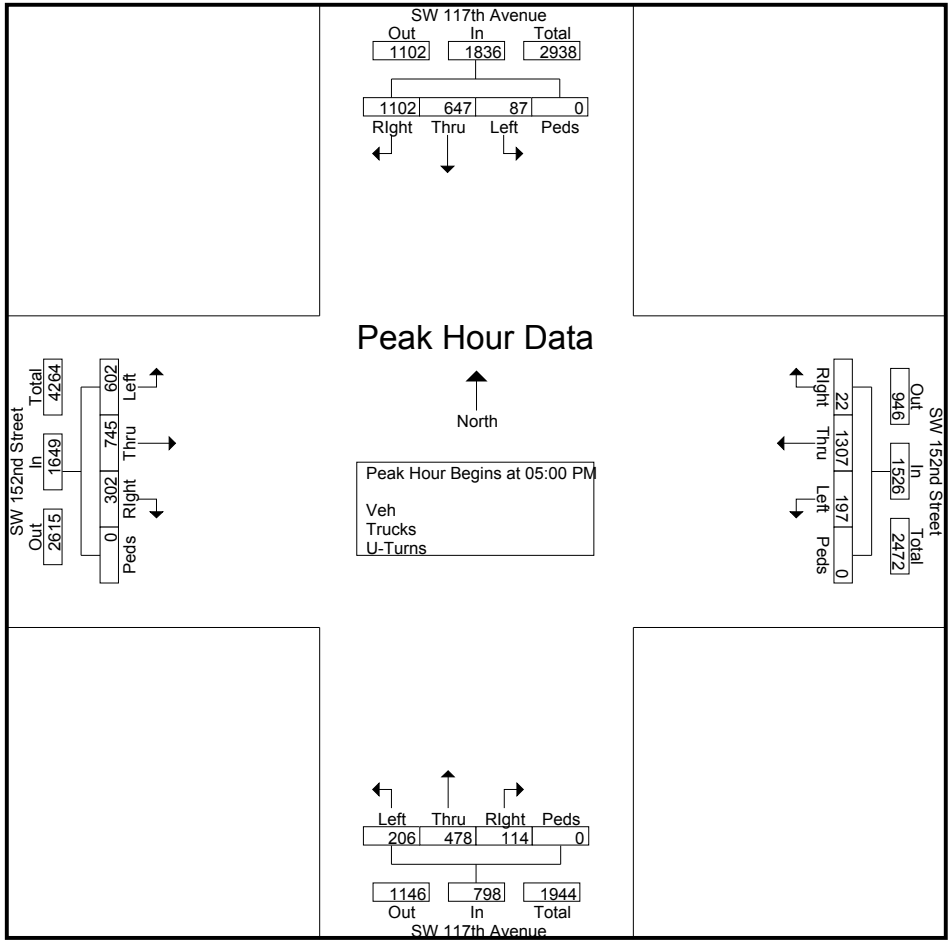

SW 152nd Street & SW 137th Avenue

File Name : SW 152nd Street & SW 137th Avenue
Site Code : 00000000
Start Date : 5/24/2016
Page No : 1

Groups Printed- Trucks

	SW 137th Avenue Southbound					SW 137th Avenue Northbound					SW 152nd Street Westbound					SW 152nd Street Eastbound					
Start Time	Left	Thru	RIght	Bikes	App. Total	Left	Thru	RIght	Bikes	App. Total	Left	Thru	RIght	Bikes	App. Total	Left	Thru	RIght	Bikes	App. Total	Int. Total
07:00 AM	1	2	0	0	3	2	5	2	0	9	2	2	2	1	7	0	0	0	0	0	19
07:15 AM	2	3	0	1	6	3	2	3	0	8	3	4	3	0	10	0	1	0	0	1	25
07:30 AM	2	6	1	0	9	0	3	2	0	5	1	2	3	0	6	0	2	0	0	2	22
07:45 AM	1	11	0	0	12	0	3	3	0	6	3	0	4	0	7	0	1	2	0	3	28
Total	6	22	1	1	30	5	13	10	0	28	9	8	12	1	30	0	4	2	0	6	94
08:00 AM	3	0	0	0	3	0	7	3	0	10	1	3	3	0	7	0	5	1	0	6	26
08:15 AM	2	7	0	0	9	0	8	1	0	9	2	2	2	0	6	0	2	0	0	2	26
08:30 AM	1	10	0	0	11	1	1	2	1	5	3	3	2	0	8	1	5	0	0	6	30
08:45 AM	4	1	1	1	7	2	2	6	1	11	1	6	2	0	9	0	8	0	0	8	35
Total	10	18	1	1	30	3	18	12	2	35	7	14	9	0	30	1	20	1	0	22	117
*** BREAK ***																					
11:00 AM	4	4	0	1	9	0	4	1	0	5	2	5	4	0	11	3	0	0	0	3	28
11:15 AM	3	6	2	0	11	2	5	1	0	8	2	1	5	0	8	1	4	0	0	5	32
11:30 AM	3	2	1	0	6	0	3	1	0	4	6	4	5	1	16	1	3	1	0	5	31
11:45 AM	4	9	1	0	14	0	5	1	0	6	4	0	7	0	11	1	1	0	0	2	33
Total	14	21	4	1	40	2	17	4	0	23	14	10	21	1	46	6	8	1	0	15	124
12:00 PM	7	4	0	0	11	1	7	6	0	14	1	1	6	0	8	0	8	2	0	10	43
12:15 PM	1	3	0	0	4	0	2	3	0	5	1	0	6	0	7	1	3	0	0	4	20
12:30 PM	3	0	1	0	4	1	2	4	0	7	0	3	0	0	3	0	6	1	0	7	21
12:45 PM	4	8	0	0	12	1	5	2	0	8	1	2	6	0	9	0	2	0	0	2	31
Total	15	15	1	0	31	3	16	15	0	34	3	6	18	0	27	1	19	3	0	23	115
*** BREAK ***																					
04:00 PM	3	0	0	0	3	1	5	2	0	8	0	1	7	0	8	0	5	0	0	5	24
04:15 PM	0	1	0	0	1	0	2	2	1	5	1	0	2	0	3	0	6	1	0	7	16
04:30 PM	2	4	1	0	7	0	3	3	0	6	0	0	2	0	2	0	8	2	0	10	25
04:45 PM	2	3	0	0	5	1	4	5	0	10	0	0	3	0	3	1	8	0	0	9	27
Total	7	8	1	0	16	2	14	12	1	29	1	1	14	0	16	1	27	3	0	31	92
05:00 PM	2	0	0	1	3	0	3	1	0	4	0	0	1	0	1	0	2	0	0	2	10
05:15 PM	3	1	0	0	4	0	0	1	0	1	1	1	3	1	6	0	0	0	0	0	11
05:30 PM	1	1	0	0	2	0	1	1	0	2	0	0	1	0	1	0	1	1	0	2	7
05:45 PM	1	2	0	0	3	0	3	2	0	5	1	0	2	0	3	0	1	0	0	1	12
Total	7	4	0	1	12	0	7	5	0	12	2	1	7	1	11	0	4	1	0	5	40
Grand Total	59	88	8	4	159	15	85	58	3	161	36	40	81	3	160	9	82	11	0	102	582
Apprch %	37.1	55.3	5	2.5		9.3	52.8	36	1.9		22.5	25	50.6	1.9		8.8	80.4	10.8	0		
Total %	10.1	15.1	1.4	0.7	27.3	2.6	14.6	10	0.5	27.7	6.2	6.9	13.9	0.5	27.5	1.5	14.1	1.9	0	17.5	

SW 152nd Street & SW 137th Avenue

File Name : SW 152nd Street & SW 137th Avenue
Site Code : 00000000
Start Date : 5/24/2016
Page No : 2

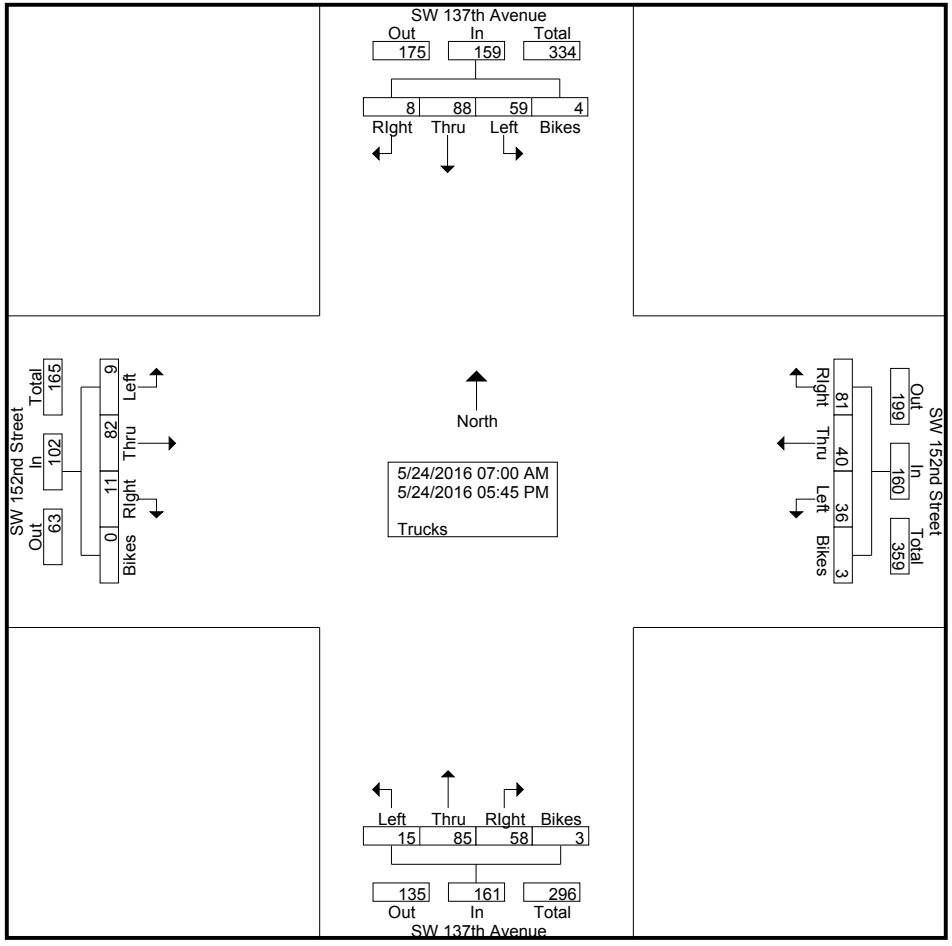

SW 152nd Street & SW 137th Avenue

File Name : SW 152nd Street & SW 137th Avenue
Site Code : 00000000
Start Date : 5/24/2016
Page No : 3

	SW 137th Avenue Southbound					SW 137th Avenue Northbound					SW 152nd Street Westbound					SW 152nd Street Eastbound					
Start Time	Left	Thru	RIght	Bikes	App. Total	Left	Thru	RIght	Bikes	App. Total	Left	Thru	RIght	Bikes	App. Total	Left	Thru	RIght	Bikes	App. Total	Int. Total
Peak Hour Analysis From 07:00 AM to 08:45 AM - Peak 1 of 1																					
Peak Hour for Entire Intersection Begins at 08:00 AM																					
08:00 AM	3	0	0	0	3	0	7	3	0	10	1	3	**3**	0	7	0	5	**1**	0	6	26
08:15 AM	2	7	0	0	9	0	**8**	1	0	9	2	2	2	0	6	0	2	0	0	2	26
08:30 AM	1	**10**	0	0	**11**	1	1	2	**1**	5	**3**	3	2	0	8	**1**	5	0	0	6	30
08:45 AM	**4**	1	**1**	**1**	7	**2**	2	**6**	1	**11**	1	**6**	2	0	**9**	0	**8**	0	0	**8**	**35**
Total Volume	10	18	1	1	30	3	18	12	2	35	7	14	9	0	30	1	20	1	0	22	117
% App. Total	33.3	60	3.3	3.3		8.6	51.4	34.3	5.7		23.3	46.7	30	0		4.5	90.9	4.5	0		
PHF	.625	.450	.250	.250	.682	.375	.563	.500	.500	.795	.583	.583	.750	.000	.833	.250	.625	.250	.000	.688	.836

SW 152nd Street & SW 137th Avenue

File Name : SW 152nd Street & SW 137th Avenue
Site Code : 00000000
Start Date : 5/24/2016
Page No : 4

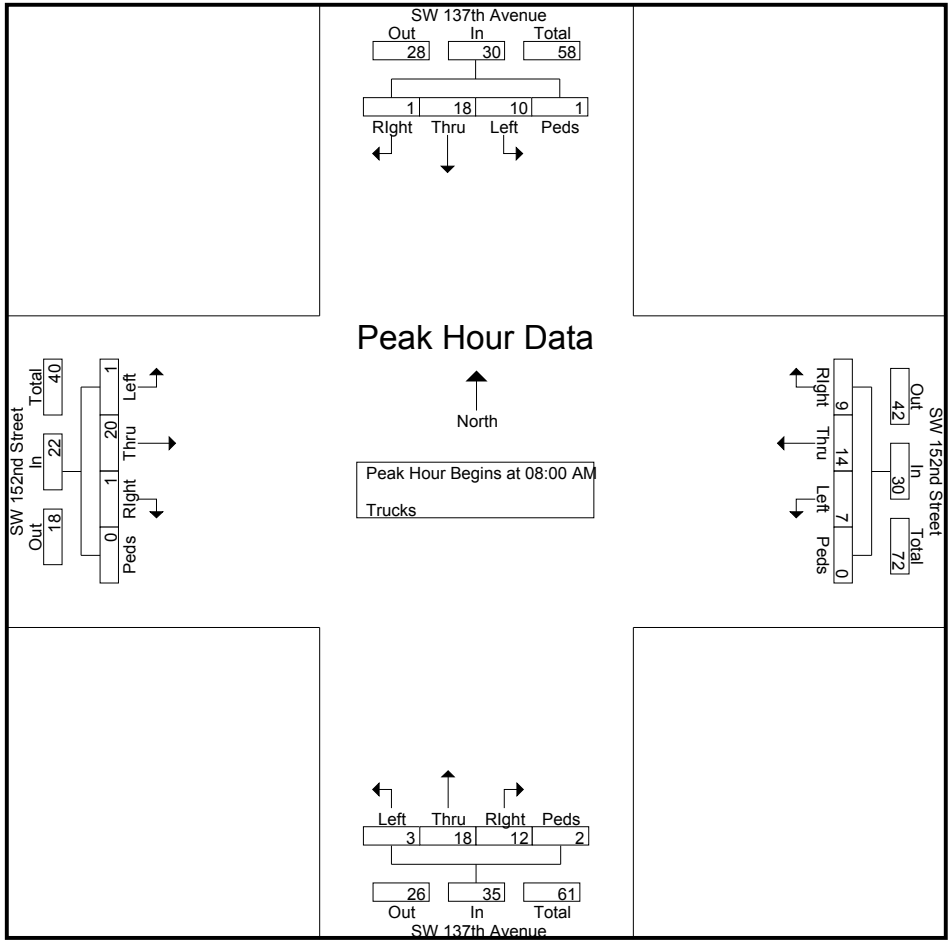

SW 152nd Street & SW 137th Avenue

File Name : SW 152nd Street & SW 137th Avenue
Site Code : 00000000
Start Date : 5/24/2016
Page No : 5

	SW 137th Avenue Southbound					SW 137th Avenue Northbound					SW 152nd Street Westbound					SW 152nd Street Eastbound					
Start Time	Left	Thru	RIght	Bikes	App. Total	Left	Thru	RIght	Bikes	App. Total	Left	Thru	RIght	Bikes	App. Total	Left	Thru	RIght	Bikes	App. Total	Int. Total
Peak Hour Analysis From 11:00 AM to 12:45 PM - Peak 1 of 1																					
Peak Hour for Entire Intersection Begins at 11:15 AM																					
11:15 AM	3	6	**2**	0	11	**2**	5	1	0	8	2	1	5	0	8	**1**	4	0	0	5	32
11:30 AM	3	2	1	0	6	0	3	1	0	4	**6**	**4**	5	**1**	**16**	1	3	1	0	5	31
11:45 AM	4	**9**	1	0	**14**	0	5	1	0	6	4	0	**7**	0	11	1	1	0	0	2	33
12:00 PM	**7**	4	0	0	11	1	**7**	**6**	0	**14**	1	1	6	0	8	0	**8**	**2**	0	**10**	**43**
Total Volume	17	21	4	0	42	3	20	9	0	32	13	6	23	1	43	3	16	3	0	22	139
% App. Total	40.5	50	9.5	0		9.4	62.5	28.1	0		30.2	14	53.5	2.3		13.6	72.7	13.6	0		
PHF	.607	.583	.500	.000	.750	.375	.714	.375	.000	.571	.542	.375	.821	.250	.672	.750	.500	.375	.000	.550	.808

SW 152nd Street & SW 137th Avenue

File Name : SW 152nd Street & SW 137th Avenue
Site Code : 00000000
Start Date : 5/24/2016
Page No : 6

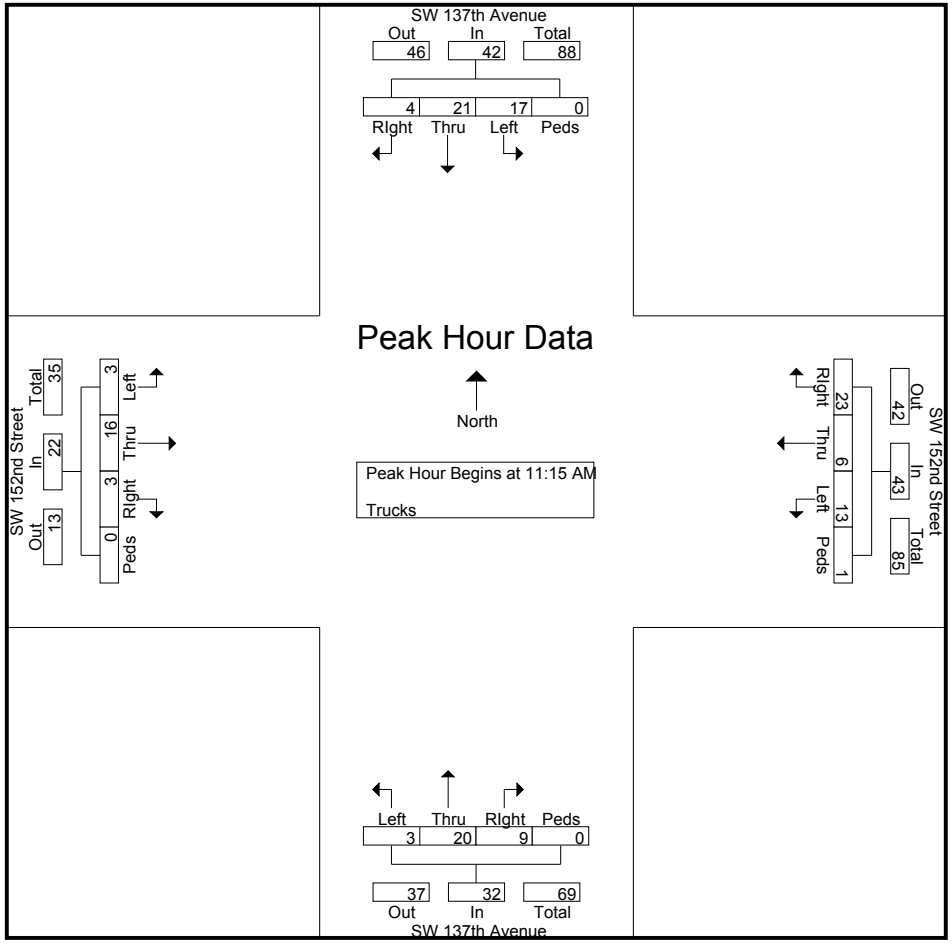

SW 152nd Street & SW 137th Avenue

File Name : SW 152nd Street & SW 137th Avenue
Site Code : 00000000
Start Date : 5/24/2016
Page No : 7

	SW 137th Avenue Southbound					SW 137th Avenue Northbound					SW 152nd Street Westbound					SW 152nd Street Eastbound					
Start Time	Left	Thru	RIght	Bikes	App. Total	Left	Thru	RIght	Bikes	App. Total	Left	Thru	RIght	Bikes	App. Total	Left	Thru	RIght	Bikes	App. Total	Int. Total
Peak Hour Analysis From 04:00 PM to 05:45 PM - Peak 1 of 1																					
Peak Hour for Entire Intersection Begins at 04:00 PM																					
04:00 PM	**3**	0	0	0	3	**1**	**5**	2	0	8	0	**1**	**7**	0	**8**	0	5	0	0	5	24
04:15 PM	0	1	0	0	1	0	2	2	**1**	5	**1**	0	2	0	3	0	6	1	0	7	16
04:30 PM	2	**4**	**1**	0	**7**	0	3	3	0	6	0	0	2	0	2	0	**8**	**2**	0	**10**	25
04:45 PM	2	3	0	0	5	1	4	**5**	0	**10**	0	0	3	0	3	**1**	8	0	0	9	**27**
Total Volume	7	8	1	0	16	2	14	12	1	29	1	1	14	0	16	1	27	3	0	31	92
% App. Total	43.8	50	6.2	0		6.9	48.3	41.4	3.4		6.2	6.2	87.5	0		3.2	87.1	9.7	0		
PHF	.583	.500	.250	.000	.571	.500	.700	.600	.250	.725	.250	.250	.500	.000	.500	.250	.844	.375	.000	.775	.852

SW 152nd Street & SW 137th Avenue

File Name : SW 152nd Street & SW 137th Avenue
Site Code : 00000000
Start Date : 5/24/2016
Page No : 8

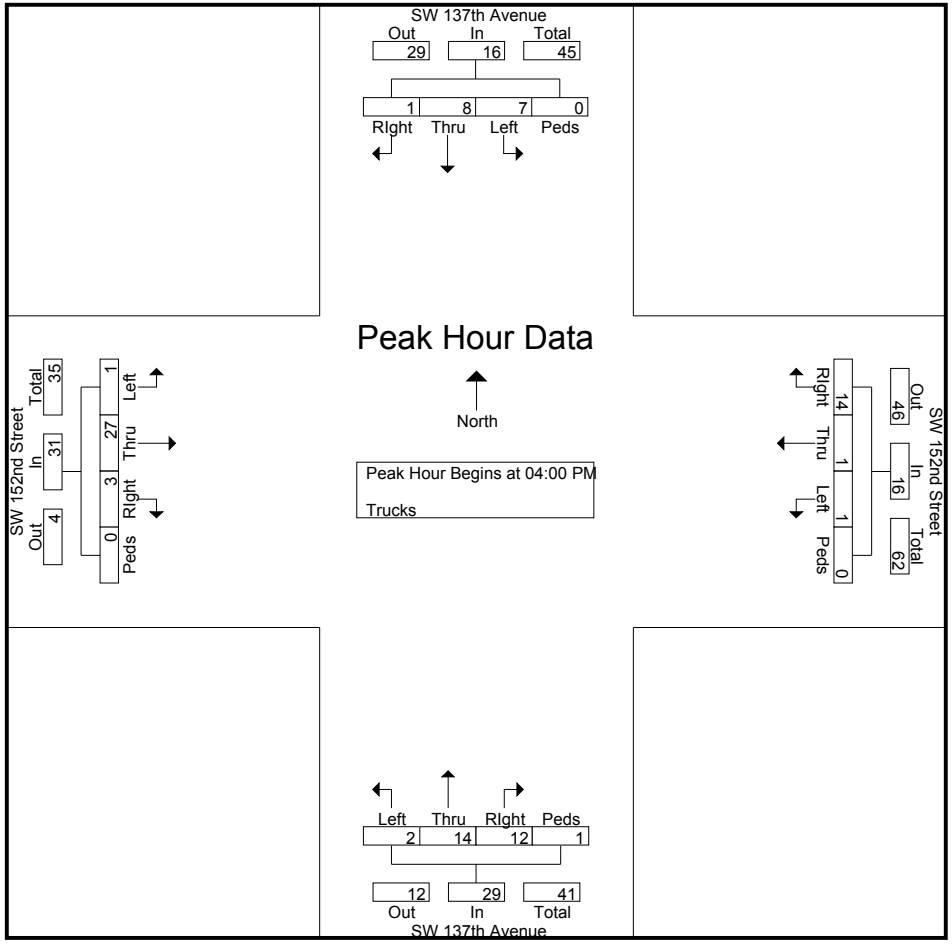

SW 152nd Street & SW 137th Avenue

File Name : SW 152nd Street & SW 137th Avenue
Site Code : 00000000
Start Date : 5/24/2016
Page No : 1

Groups Printed- Turns

	SW 137th Avenue Southbound					SW 137th Avenue Northbound					SW 152nd Street Westbound					SW 152nd Street Eastbound					
Start Time	Left	Thru	RIght	Peds/Bike	App. Total	Left	Thru	RIght	Peds/Bike	App. Total	Left	Thru	RIght	Peds/Bike	App. Total	Left	Thru	RIght	Peds/Bike	App. Total	Int. Total
*** BREAK ***																					
07:15 AM	2	0	0	0	2	0	0	0	0	0	0	0	0	0	0	0	0	0	0	0	2
07:30 AM	2	0	0	0	2	0	0	0	0	0	1	0	0	0	1	0	0	0	0	0	3
07:45 AM	3	0	0	0	3	0	0	0	0	0	0	0	0	0	0	0	0	0	0	0	3
Total	7	0	0	0	7	0	0	0	0	0	1	0	0	0	1	0	0	0	0	0	8
08:00 AM	0	0	0	0	0	4	0	0	0	4	1	0	0	0	1	0	0	0	0	0	5
08:15 AM	2	0	0	0	2	1	0	0	0	1	2	0	0	0	2	0	0	0	0	0	5
08:30 AM	1	0	0	0	1	1	0	0	0	1	1	0	0	0	1	0	0	0	0	0	3
08:45 AM	0	0	0	0	0	2	0	0	0	2	2	0	0	0	2	1	0	0	0	1	5
Total	3	0	0	0	3	8	0	0	0	8	6	0	0	0	6	1	0	0	0	1	18
*** BREAK ***																					
11:00 AM	2	0	0	0	2	7	0	0	0	7	3	0	0	0	3	0	0	0	0	0	12
11:15 AM	2	0	0	0	2	1	0	0	0	1	0	0	0	0	0	0	0	0	0	0	3
11:30 AM	3	0	0	0	3	4	0	0	0	4	1	0	0	0	1	0	0	0	0	0	8
11:45 AM	0	0	0	0	0	5	0	0	0	5	1	0	0	0	1	0	0	0	0	0	6
Total	7	0	0	0	7	17	0	0	0	17	5	0	0	0	5	0	0	0	0	0	29
12:00 PM	1	0	0	0	1	0	0	0	0	0	0	0	0	0	0	0	0	0	0	0	1
12:15 PM	2	0	0	0	2	3	0	0	0	3	2	0	0	0	2	0	0	0	0	0	7
12:30 PM	1	0	0	0	1	2	0	0	0	2	0	0	0	0	0	0	0	0	0	0	3
12:45 PM	3	0	0	0	3	3	0	0	0	3	3	0	0	0	3	0	0	0	0	0	9
Total	7	0	0	0	7	8	0	0	0	8	5	0	0	0	5	0	0	0	0	0	20
*** BREAK ***																					
04:00 PM	1	0	0	0	1	0	0	0	0	0	0	0	0	0	0	0	0	0	0	0	1
04:15 PM	1	0	0	0	1	1	0	0	0	1	0	0	0	0	0	0	0	0	0	0	2
04:30 PM	2	0	0	0	2	2	0	0	0	2	0	0	0	0	0	0	0	0	0	0	4
04:45 PM	0	0	0	0	0	1	0	0	0	1	1	0	0	0	1	1	0	0	0	1	3
Total	4	0	0	0	4	4	0	0	0	4	1	0	0	0	1	1	0	0	0	1	10
05:00 PM	0	0	0	0	0	1	0	0	0	1	2	0	0	0	2	0	0	0	0	0	3
05:15 PM	0	0	0	0	0	2	0	0	0	2	0	0	0	0	0	0	0	0	0	0	2
05:30 PM	0	0	0	0	0	5	0	0	0	5	0	0	0	0	0	0	0	0	0	0	5
05:45 PM	0	0	0	0	0	2	0	0	0	2	0	0	0	0	0	1	0	0	0	1	3
Total	0	0	0	0	0	10	0	0	0	10	2	0	0	0	2	1	0	0	0	1	13
Grand Total	28	0	0	0	28	47	0	0	0	47	20	0	0	0	20	3	0	0	0	3	98
Apprch %	100	0	0	0		100	0	0	0		100	0	0	0		100	0	0	0		
Total %	28.6	0	0	0	28.6	48	0	0	0	48	20.4	0	0	0	20.4	3.1	0	0	0	3.1	

SW 152nd Street & SW 137th Avenue

File Name : SW 152nd Street & SW 137th Avenue
Site Code : 00000000
Start Date : 5/24/2016
Page No : 2

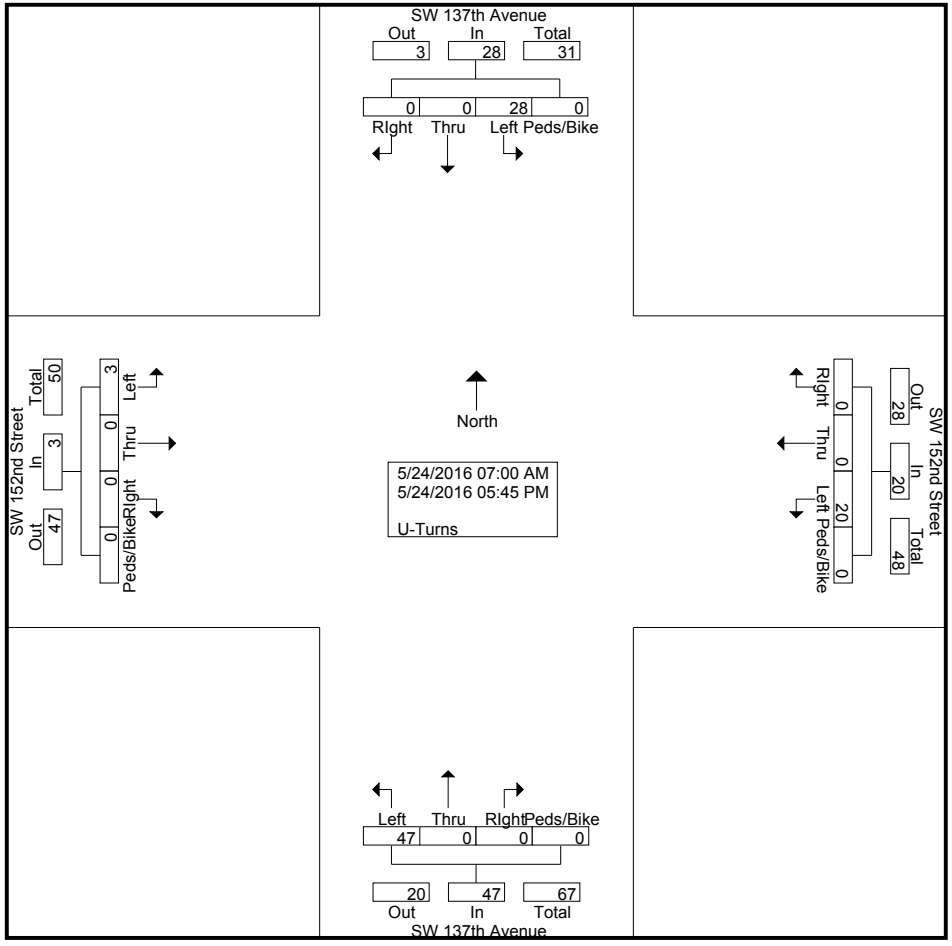

SW 152nd Street & SW 137th Avenue

File Name : SW 152nd Street & SW 137th Avenue
Site Code : 00000000
Start Date : 5/24/2016
Page No : 3

	SW 137th Avenue Southbound					SW 137th Avenue Northbound					SW 152nd Street Westbound					SW 152nd Street Eastbound					
Start Time	Left	Thru	RIght	Peds/Bike	App. Total	Left	Thru	RIght	Peds/Bike	App. Total	Left	Thru	RIght	Peds/Bike	App. Total	Left	Thru	RIght	Peds/Bike	App. Total	Int. Total
Peak Hour Analysis From 07:00 AM to 08:45 AM - Peak 1 of 1																					
Peak Hour for Entire Intersection Begins at 08:00 AM																					
08:00 AM	0	0	0	0	0	**4**	0	0	0	**4**	1	0	0	0	1	0	0	0	0	0	**5**
08:15 AM	**2**	0	0	0	**2**	1	0	0	0	1	**2**	0	0	0	**2**	0	0	0	0	0	5
08:30 AM	1	0	0	0	1	1	0	0	0	1	1	0	0	0	1	0	0	0	0	0	3
08:45 AM	0	0	0	0	0	2	0	0	0	2	2	0	0	0	2	**1**	0	0	0	**1**	5
Total Volume	3	0	0	0	3	8	0	0	0	8	6	0	0	0	6	1	0	0	0	1	18
% App. Total	100	0	0	0		100	0	0	0		100	0	0	0		100	0	0	0		
PHF	.375	.000	.000	.000	.375	.500	.000	.000	.000	.500	.750	.000	.000	.000	.750	.250	.000	.000	.000	.250	.900

SW 152nd Street & SW 137th Avenue

File Name : SW 152nd Street & SW 137th Avenue
Site Code : 00000000
Start Date : 5/24/2016
Page No : 4

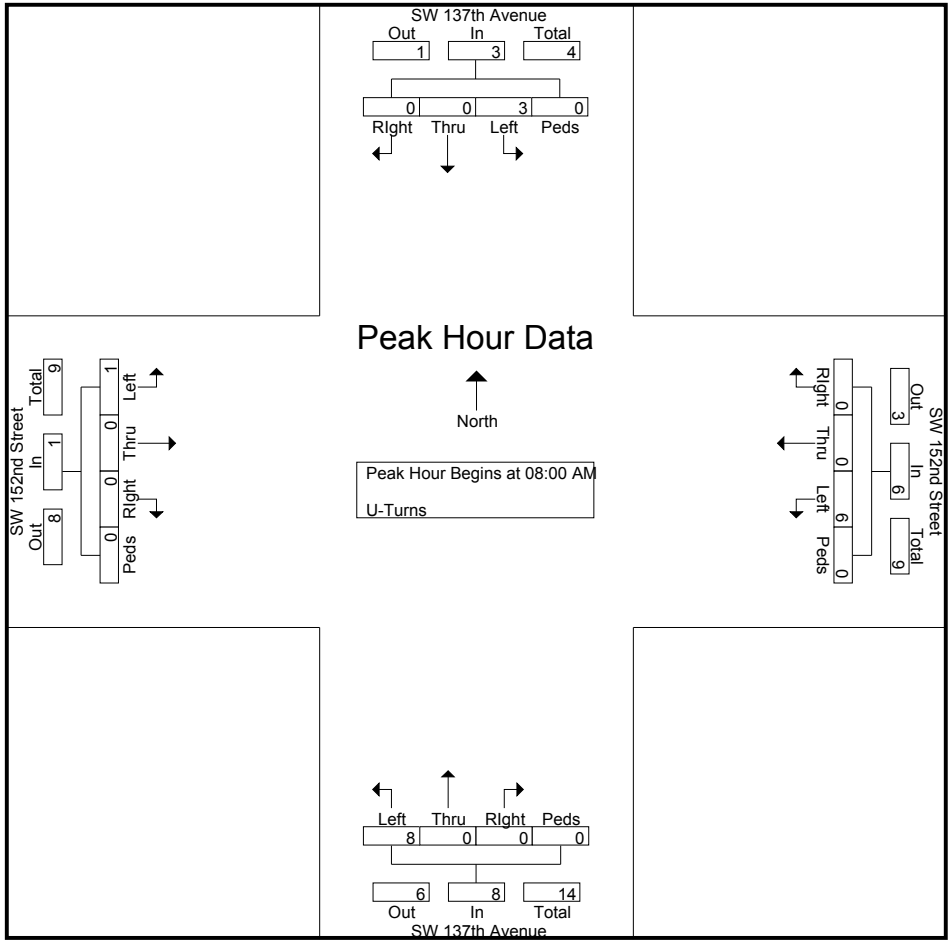

SW 152nd Street & SW 137th Avenue

File Name : SW 152nd Street & SW 137th Avenue
Site Code : 00000000
Start Date : 5/24/2016
Page No : 5

	SW 137th Avenue Southbound					SW 137th Avenue Northbound					SW 152nd Street Westbound					SW 152nd Street Eastbound					
Start Time	Left	Thru	RIght	Peds/Bike	App. Total	Left	Thru	RIght	Peds/Bike	App. Total	Left	Thru	RIght	Peds/Bike	App. Total	Left	Thru	RIght	Peds/Bike	App. Total	Int. Total
Peak Hour Analysis From 11:00 AM to 12:45 PM - Peak 1 of 1																					
Peak Hour for Entire Intersection Begins at 11:00 AM																					
11:00 AM	2	0	0	0	2	**7**	0	0	0	**7**	**3**	0	0	0	**3**	0	0	0	0	0	**12**
11:15 AM	2	0	0	0	2	1	0	0	0	1	0	0	0	0	0	0	0	0	0	0	3
11:30 AM	**3**	0	0	0	**3**	4	0	0	0	4	1	0	0	0	1	0	0	0	0	0	8
11:45 AM	0	0	0	0	0	5	0	0	0	5	1	0	0	0	1	0	0	0	0	0	6
Total Volume	7	0	0	0	7	17	0	0	0	17	5	0	0	0	5	0	0	0	0	0	29
% App. Total	100	0	0	0		100	0	0	0		100	0	0	0		0	0	0	0		
PHF	.583	.000	.000	.000	.583	.607	.000	.000	.000	.607	.417	.000	.000	.000	.417	.000	.000	.000	.000	.000	.604

SW 152nd Street & SW 137th Avenue

File Name : SW 152nd Street & SW 137th Avenue
Site Code : 00000000
Start Date : 5/24/2016
Page No : 6

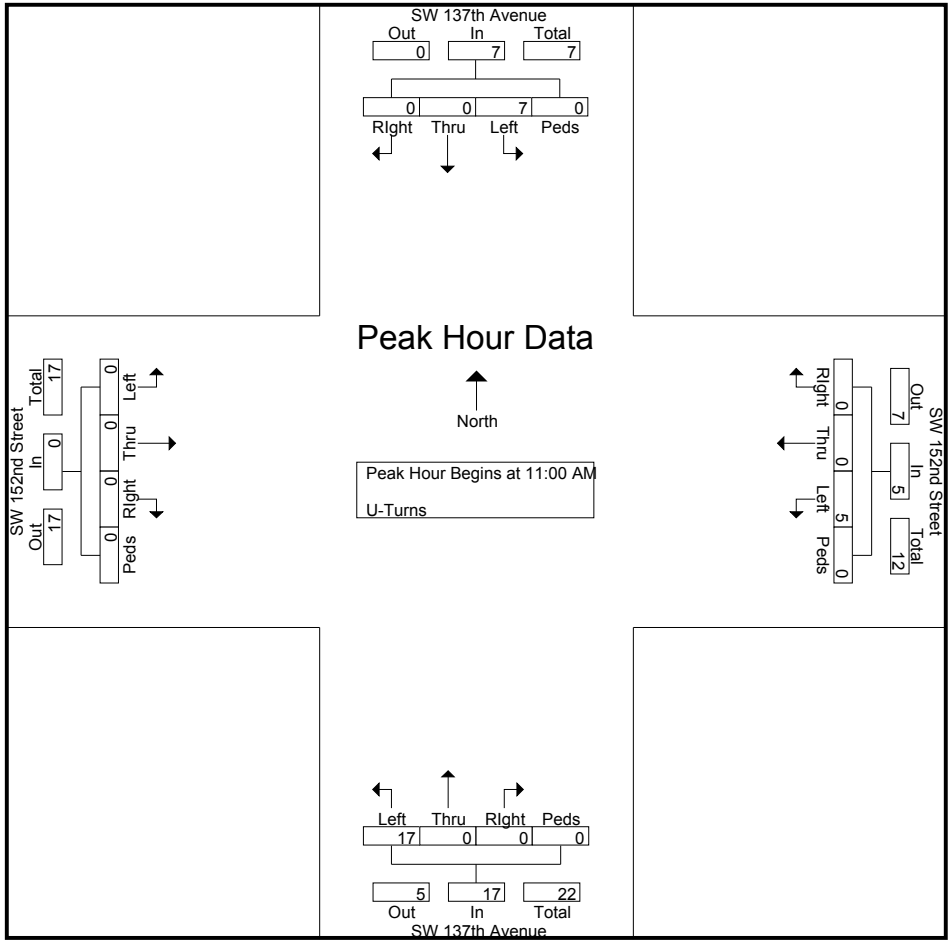

SW 152nd Street & SW 137th Avenue

File Name : SW 152nd Street & SW 137th Avenue
Site Code : 00000000
Start Date : 5/24/2016
Page No : 7

	SW 137th Avenue Southbound					SW 137th Avenue Northbound					SW 152nd Street Westbound					SW 152nd Street Eastbound					
Start Time	Left	Thru	RIght	Peds/Bike	App. Total	Left	Thru	RIght	Peds/Bike	App. Total	Left	Thru	RIght	Peds/Bike	App. Total	Left	Thru	RIght	Peds/Bike	App. Total	Int. Total
Peak Hour Analysis From 04:00 PM to 05:45 PM - Peak 1 of 1																					
Peak Hour for Entire Intersection Begins at 04:45 PM																					
04:45 PM	0	0	0	0	0	1	0	0	0	1	1	0	0	0	1	**1**	0	0	0	**1**	3
05:00 PM	0	0	0	0	0	1	0	0	0	1	**2**	0	0	0	**2**	0	0	0	0	0	3
05:15 PM	0	0	0	0	0	2	0	0	0	2	0	0	0	0	0	0	0	0	0	0	2
05:30 PM	0	0	0	0	0	**5**	0	0	0	**5**	0	0	0	0	0	0	0	0	0	0	**5**
Total Volume	0	0	0	0	0	9	0	0	0	9	3	0	0	0	3	1	0	0	0	1	13
% App. Total	0	0	0	0		100	0	0	0		100	0	0	0		100	0	0	0		
PHF	.000	.000	.000	.000	.000	.450	.000	.000	.000	.450	.375	.000	.000	.000	.375	.250	.000	.000	.000	.250	.650

SW 152nd Street & SW 137th Avenue

File Name : SW 152nd Street & SW 137th Avenue
Site Code : 00000000
Start Date : 5/24/2016
Page No : 8

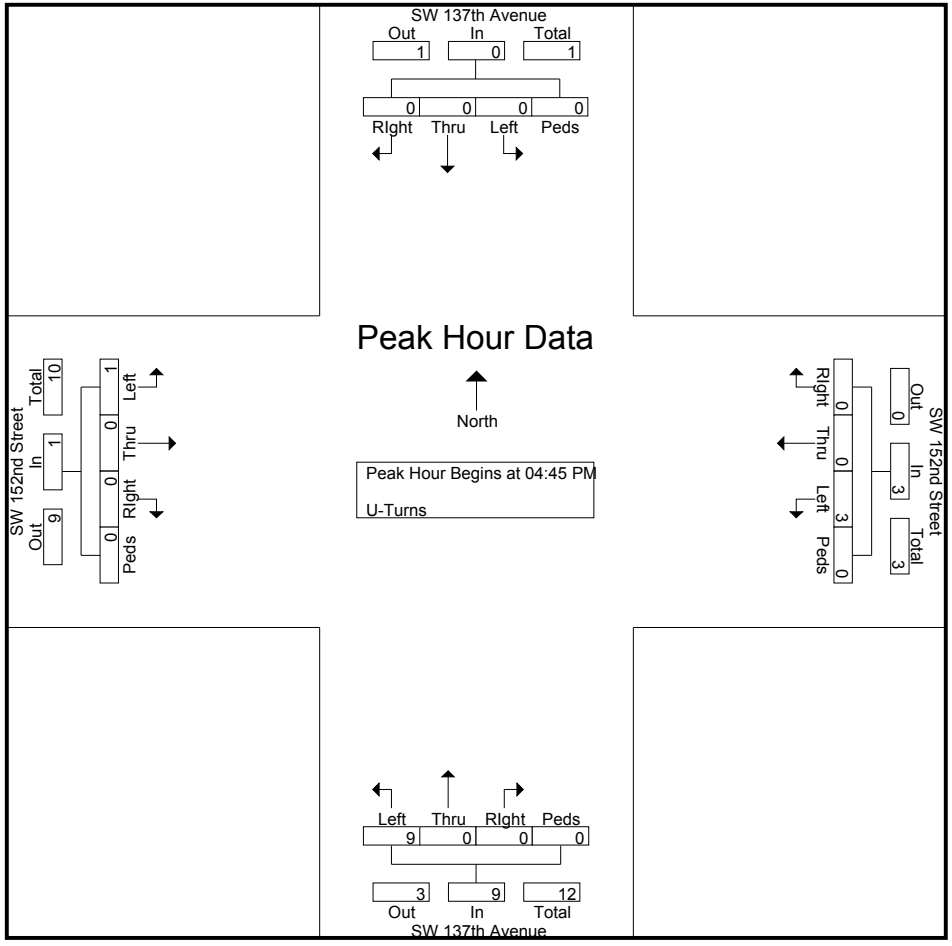

SW 152nd Street & SW 137th Avenue

File Name : SW 152nd Street & SW 137th Avenue
Site Code : 00000000
Start Date : 5/24/2016
Page No : 1

Groups Printed- Veh - Trucks - Turns

	SW 137th Avenue Southbound					SW 137th Avenue Northbound					SW 152nd Street Westbound					SW 152nd Street Eastbound					
Start Time	Left	Thru	RIght	Peds/Bike	App. Total	Left	Thru	RIght	Peds/Bike	App. Total	Left	Thru	RIght	Peds/Bike	App. Total	Left	Thru	RIght	Peds/Bike	App. Total	Int. Total
07:00 AM	48	243	6	0	297	14	415	93	0	522	41	52	107	3	203	86	102	0	1	189	1211
07:15 AM	65	222	14	4	305	120	194	71	1	386	82	104	120	0	306	106	186	7	0	299	1296
07:30 AM	71	278	21	0	370	92	330	114	0	536	50	104	142	0	296	88	174	4	0	266	1468
07:45 AM	69	233	14	0	316	8	358	116	1	483	63	161	194	0	418	120	223	10	0	353	1570
Total	253	976	55	4	1288	234	1297	394	2	1927	236	421	563	3	1223	400	685	21	1	1107	5545
08:00 AM	28	290	27	0	345	12	404	104	0	520	57	109	158	2	326	93	210	10	0	313	1504
08:15 AM	69	223	20	1	313	11	295	98	1	405	92	177	156	0	425	93	226	13	0	332	1475
08:30 AM	90	294	23	0	407	20	340	106	1	467	64	102	130	0	296	94	223	10	0	327	1497
08:45 AM	111	208	26	1	346	17	297	140	1	455	89	123	172	0	384	92	263	16	0	371	1556
Total	298	1015	96	2	1411	60	1336	448	3	1847	302	511	616	2	1431	372	922	49	0	1343	6032
*** BREAK ***																					
11:00 AM	107	176	41	4	328	33	169	73	2	277	64	134	101	2	301	59	163	18	4	244	1150
11:15 AM	111	210	32	6	359	39	190	87	2	318	70	119	111	0	300	67	157	19	2	245	1222
11:30 AM	93	183	33	2	311	34	176	67	1	278	82	130	117	1	330	59	149	31	1	240	1159
11:45 AM	90	191	37	0	318	63	191	74	0	328	68	101	113	0	282	64	121	21	1	207	1135
Total	401	760	143	12	1316	169	726	301	5	1201	284	484	442	3	1213	249	590	89	8	936	4666
12:00 PM	103	215	35	0	353	46	166	54	1	267	85	139	126	0	350	64	169	25	0	258	1228
12:15 PM	116	293	43	0	452	46	191	80	0	317	84	138	128	1	351	65	145	17	0	227	1347
12:30 PM	103	212	37	0	352	56	187	75	0	318	105	164	117	0	386	68	169	28	1	266	1322
12:45 PM	105	251	49	0	405	45	215	80	3	343	72	119	113	1	305	97	136	21	1	255	1308
Total	427	971	164	0	1562	193	759	289	4	1245	346	560	484	2	1392	294	619	91	2	1006	5205
*** BREAK ***																					
04:00 PM	97	304	46	1	448	38	217	86	1	342	149	248	135	1	533	47	121	31	0	199	1522
04:15 PM	119	364	59	1	543	44	256	55	1	356	135	250	122	0	507	46	169	27	0	242	1648
04:30 PM	107	334	47	0	488	42	240	66	0	348	117	226	116	1	460	51	175	22	0	248	1544
04:45 PM	106	341	51	0	498	36	229	67	1	333	146	208	108	0	462	45	141	21	0	207	1500
Total	429	1343	203	2	1977	160	942	274	3	1379	547	932	481	2	1962	189	606	101	0	896	6214
05:00 PM	120	368	44	1	533	43	229	72	0	344	122	227	134	1	484	52	115	25	0	192	1553
05:15 PM	122	450	56	0	628	34	200	59	1	294	126	238	140	1	505	63	139	24	1	227	1654
05:30 PM	115	501	49	0	665	25	203	87	1	316	121	282	111	0	514	46	141	25	0	212	1707
05:45 PM	112	453	41	0	606	51	197	54	5	307	145	260	148	1	554	44	133	28	0	205	1672
Total	469	1772	190	1	2432	153	829	272	7	1261	514	1007	533	3	2057	205	528	102	1	836	6586
Grand Total	2277	6837	851	21	9986	969	5889	1978	24	8860	2229	3915	3119	15	9278	1709	3950	453	12	6124	34248
Apprch %	22.8	68.5	8.5	0.2		10.9	66.5	22.3	0.3		24	42.2	33.6	0.2		27.9	64.5	7.4	0.2		
Total %	6.6	20	2.5	0.1	29.2	2.8	17.2	5.8	0.1	25.9	6.5	11.4	9.1	0	27.1	5	11.5	1.3	0	17.9	
Veh	2190	6749	843	17	9799	907	5804	1920	21	8652	2173	3875	3038	12	9098	1697	3868	442	12	6019	33568
% Veh	96.2	98.7	99.1	81	98.1	93.6	98.6	97.1	87.5	97.7	97.5	99	97.4	80	98.1	99.3	97.9	97.6	100	98.3	98
Trucks	59	88	8	4	159	15	85	58	3	161	36	40	81	3	160	9	82	11	0	102	582
% Trucks	2.6	1.3	0.9	19	1.6	1.5	1.4	2.9	12.5	1.8	1.6	1	2.6	20	1.7	0.5	2.1	2.4	0	1.7	1.7

SW 152nd Street & SW 137th Avenue

File Name : SW 152nd Street & SW 137th Avenue
Site Code : 00000000
Start Date : 5/24/2016
Page No : 2

Groups Printed- Veh - Trucks - Turns

	SW 137th Avenue Southbound					SW 137th Avenue Northbound					SW 152nd Street Westbound					SW 152nd Street Eastbound					
	Left	Thru	RIght	Peds/Bike	App. Total	Left	Thru	RIght	Peds/Bike	App. Total	Left	Thru	RIght	Peds/Bike	App. Total	Left	Thru	RIght	Peds/Bike	App. Total	Int. Total
U-Turns	28	0	0	0	28	47	0	0	0	47	20	0	0	0	20	3	0	0	0	3	98
% U-Turns	1.2	0	0	0	0.3	4.9	0	0	0	0.5	0.9	0	0	0	0.2	0.2	0	0	0	0	0.3

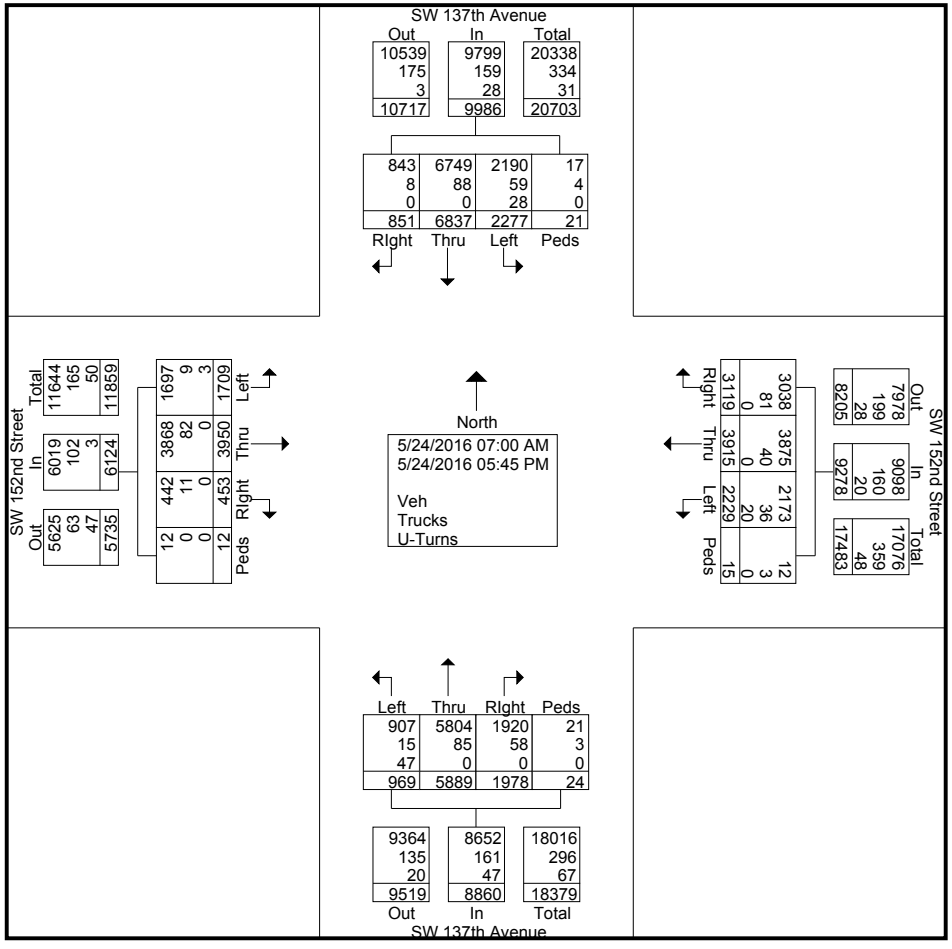

SW 152nd Street & SW 137th Avenue

File Name : SW 152nd Street & SW 137th Avenue
Site Code : 00000000
Start Date : 5/24/2016
Page No : 3

	SW 137th Avenue Southbound					SW 137th Avenue Northbound					SW 152nd Street Westbound					SW 152nd Street Eastbound					
Start Time	Left	Thru	RIght	Peds/Bike	App. Total	Left	Thru	RIght	Peds/Bike	App. Total	Left	Thru	RIght	Peds/Bike	App. Total	Left	Thru	RIght	Peds/Bike	App. Total	Int. Total
Peak Hour Analysis From 07:00 AM to 08:45 AM - Peak 1 of 1																					
Peak Hour for Entire Intersection Begins at 07:45 AM																					
07:45 AM	69	233	14	0	316	8	358	**116**	**1**	483	63	161	**194**	0	418	**120**	223	10	0	**353**	**1570**
08:00 AM	28	290	**27**	0	345	12	**404**	104	0	**520**	57	109	158	**2**	326	93	210	10	0	313	1504
08:15 AM	69	223	20	**1**	313	11	295	98	1	405	**92**	**177**	156	0	**425**	93	**226**	**13**	0	332	1475
08:30 AM	**90**	**294**	23	0	**407**	**20**	340	106	1	467	64	102	130	0	296	94	223	10	0	327	1497
Total Volume	256	1040	84	1	1381	51	1397	424	3	1875	276	549	638	2	1465	400	882	43	0	1325	6046
% App. Total	18.5	75.3	6.1	0.1		2.7	74.5	22.6	0.2		18.8	37.5	43.5	0.1		30.2	66.6	3.2	0		
PHF	.711	.884	.778	.250	.848	.638	.864	.914	.750	.901	.750	.775	.822	.250	.862	.833	.976	.827	.000	.938	.963

SW 152nd Street & SW 137th Avenue

File Name : SW 152nd Street & SW 137th Avenue
Site Code : 00000000
Start Date : 5/24/2016
Page No : 4

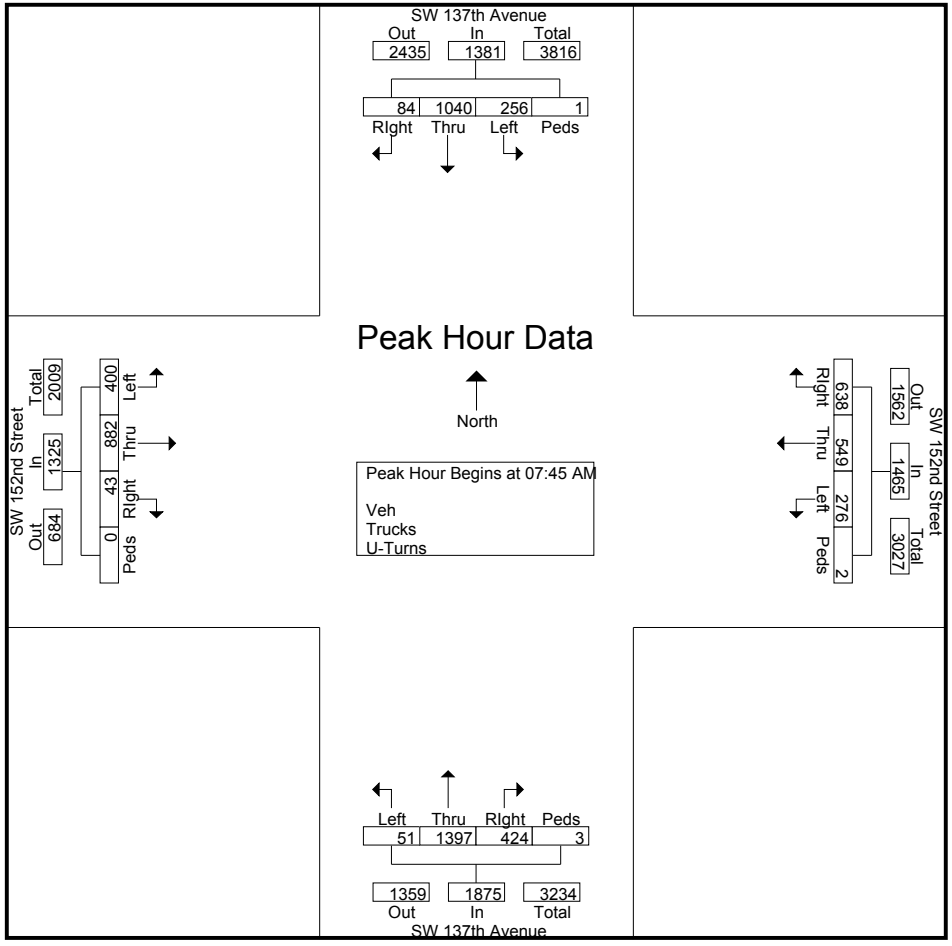

SW 152nd Street & SW 137th Avenue

File Name : SW 152nd Street & SW 137th Avenue
Site Code : 00000000
Start Date : 5/24/2016
Page No : 5

	SW 137th Avenue Southbound					SW 137th Avenue Northbound					SW 152nd Street Westbound					SW 152nd Street Eastbound					
Start Time	Left	Thru	RIght	Peds/Bike	App. Total	Left	Thru	RIght	Peds/Bike	App. Total	Left	Thru	RIght	Peds/Bike	App. Total	Left	Thru	RIght	Peds/Bike	App. Total	Int. Total
Peak Hour Analysis From 11:00 AM to 12:45 PM - Peak 1 of 1																					
Peak Hour for Entire Intersection Begins at 12:00 PM																					
12:00 PM	103	215	35	0	353	46	166	54	1	267	85	139	126	0	350	64	**169**	25	0	258	1228
12:15 PM	**116**	**293**	43	0	**452**	46	191	**80**	0	317	84	138	**128**	**1**	351	65	145	17	0	227	**1347**
12:30 PM	103	212	37	0	352	**56**	187	75	0	318	**105**	**164**	117	0	**386**	68	169	**28**	**1**	**266**	1322
12:45 PM	105	251	**49**	0	405	45	**215**	80	**3**	**343**	72	119	113	1	305	**97**	136	21	1	255	1308
Total Volume	427	971	164	0	1562	193	759	289	4	1245	346	560	484	2	1392	294	619	91	2	1006	5205
% App. Total	27.3	62.2	10.5	0		15.5	61	23.2	0.3		24.9	40.2	34.8	0.1		29.2	61.5	9	0.2		
PHF	.920	.828	.837	.000	.864	.862	.883	.903	.333	.907	.824	.854	.945	.500	.902	.758	.916	.813	.500	.945	.966

SW 152nd Street & SW 137th Avenue

File Name : SW 152nd Street & SW 137th Avenue
Site Code : 00000000
Start Date : 5/24/2016
Page No : 6

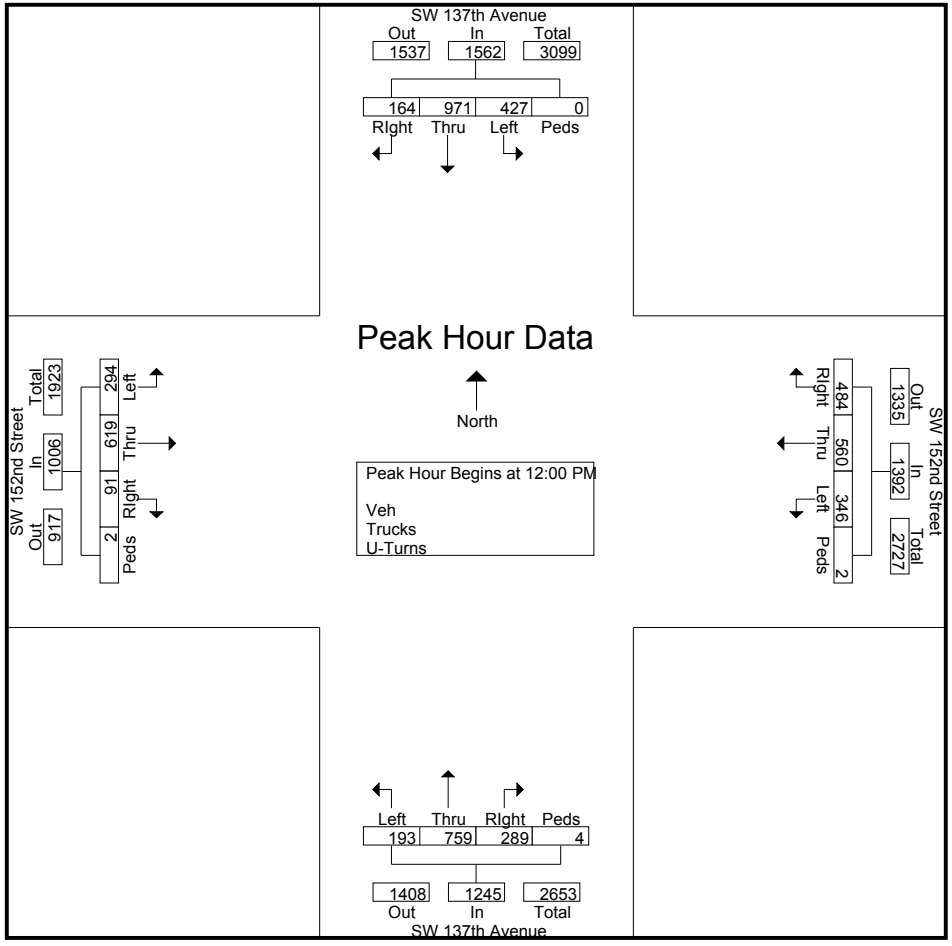

SW 152nd Street & SW 137th Avenue

File Name : SW 152nd Street & SW 137th Avenue
Site Code : 00000000
Start Date : 5/24/2016
Page No : 7

	SW 137th Avenue Southbound					SW 137th Avenue Northbound					SW 152nd Street Westbound					SW 152nd Street Eastbound					
Start Time	Left	Thru	RIght	Peds/Bike	App. Total	Left	Thru	RIght	Peds/Bike	App. Total	Left	Thru	RIght	Peds/Bike	App. Total	Left	Thru	RIght	Peds/Bike	App. Total	Int. Total
Peak Hour Analysis From 04:00 PM to 05:45 PM - Peak 1 of 1																					
Peak Hour for Entire Intersection Begins at 05:00 PM																					
05:00 PM	120	368	44	**1**	533	43	**229**	72	0	**344**	122	227	134	**1**	484	52	115	25	0	192	1553
05:15 PM	**122**	450	**56**	0	628	34	200	59	1	294	126	238	140	1	505	**63**	139	24	**1**	**227**	1654
05:30 PM	115	**501**	49	0	**665**	25	203	**87**	1	316	121	**282**	111	0	514	46	**141**	25	0	212	**1707**
05:45 PM	112	453	41	0	606	**51**	197	54	**5**	307	**145**	260	**148**	1	**554**	44	133	**28**	0	205	1672
Total Volume	469	1772	190	1	2432	153	829	272	7	1261	514	1007	533	3	2057	205	528	102	1	836	6586
% App. Total	19.3	72.9	7.8	0		12.1	65.7	21.6	0.6		25	49	25.9	0.1		24.5	63.2	12.2	0.1		
PHF	.961	.884	.848	.250	.914	.750	.905	.782	.350	.916	.886	.893	.900	.750	.928	.813	.936	.911	.250	.921	.965

SW 152nd Street & SW 137th Avenue

File Name : SW 152nd Street & SW 137th Avenue
Site Code : 00000000
Start Date : 5/24/2016
Page No : 8

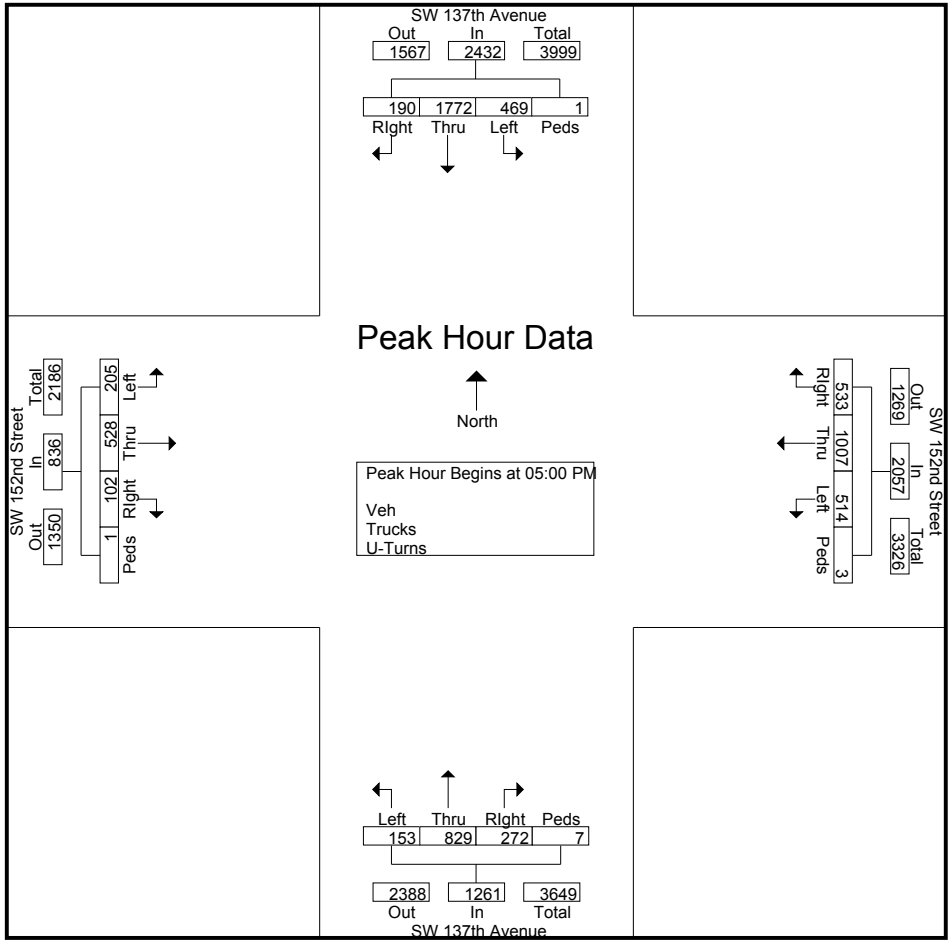

SW 152nd Street & SW 157th Avenue

File Name : SW 152nd Street & SW 157th Avenue
Site Code : 00000000
Start Date : 5/24/2016
Page No : 1

Groups Printed- Trucks

	SW 157th Avenue Southbound					SW 157th Avenue Northbound					SW 152nd Street Westbound					SW 152nd Street Eastbound					
Start Time	Left	Thru	RIght	Bikes	App. Total	Left	Thru	RIght	Bikes	App. Total	Left	Thru	RIght	Bikes	App. Total	Left	Thru	RIght	Bikes	App. Total	Int. Total
07:00 AM	0	2	0	0	2	0	1	0	0	1	0	2	3	0	5	0	0	0	0	0	8
07:15 AM	0	3	0	0	3	0	1	0	0	1	1	0	2	0	3	0	3	0	0	3	10
07:30 AM	1	0	0	0	1	0	0	0	0	0	1	3	1	0	5	0	2	0	0	2	8
07:45 AM	0	2	0	0	2	2	5	0	0	7	0	2	1	0	3	0	3	0	0	3	15
Total	1	7	0	0	8	2	7	0	0	9	2	7	7	0	16	0	8	0	0	8	41
08:00 AM	2	0	0	2	4	0	7	1	0	8	1	1	0	2	4	0	2	1	0	3	19
08:15 AM	1	3	0	0	4	0	6	0	1	7	0	3	2	0	5	0	1	0	1	2	18
08:30 AM	3	3	0	0	6	0	8	0	0	8	1	2	4	0	7	0	2	1	0	3	24
08:45 AM	6	2	0	0	8	0	5	0	0	5	0	0	4	0	4	0	2	0	0	2	19
Total	12	8	0	2	22	0	26	1	1	28	2	6	10	2	20	0	7	2	1	10	80
*** BREAK ***																					
11:00 AM	1	1	0	1	3	0	1	0	0	1	0	0	2	0	2	0	1	0	0	1	7
11:15 AM	1	1	0	0	2	0	3	0	0	3	0	1	1	0	2	0	0	0	0	0	7
11:30 AM	1	1	0	0	2	0	0	0	0	0	0	0	1	0	1	0	0	0	0	0	3
11:45 AM	1	0	0	0	1	0	0	0	0	0	1	0	1	0	2	0	1	0	0	1	4
Total	4	3	0	1	8	0	4	0	0	4	1	1	5	0	7	0	2	0	0	2	21
12:00 PM	0	1	0	0	1	0	0	1	0	1	1	0	0	0	1	0	0	0	0	0	3
12:15 PM	1	0	0	0	1	2	1	1	0	4	0	0	0	0	0	0	0	0	0	0	5
12:30 PM	0	1	0	0	1	0	3	0	0	3	0	1	1	0	2	0	0	0	0	0	6
12:45 PM	1	1	0	0	2	0	0	0	0	0	0	0	0	0	0	0	0	0	0	0	2
Total	2	3	0	0	5	2	4	2	0	8	1	1	1	0	3	0	0	0	0	0	16
*** BREAK ***																					
04:00 PM	3	5	0	0	8	0	2	2	0	4	0	1	4	0	5	0	0	1	0	1	18
04:15 PM	3	1	0	0	4	0	4	0	0	4	0	1	2	1	4	0	2	1	0	3	15
04:30 PM	0	2	0	0	2	0	0	0	0	0	1	1	0	0	2	0	1	1	0	2	6
04:45 PM	2	5	1	0	8	0	0	1	0	1	0	0	1	0	1	1	2	1	0	4	14
Total	8	13	1	0	22	0	6	3	0	9	1	3	7	1	12	1	5	4	0	10	53
05:00 PM	0	0	0	0	0	0	1	0	0	1	0	1	2	0	3	0	1	0	0	1	5
05:15 PM	0	7	0	0	7	0	0	0	0	0	0	1	1	0	2	0	0	0	0	0	9
05:30 PM	0	1	0	0	1	0	0	0	0	0	1	1	1	0	3	0	1	0	0	1	5
05:45 PM	0	4	0	0	4	0	0	0	0	0	0	1	0	0	1	0	1	0	0	1	6
Total	0	12	0	0	12	0	1	0	0	1	1	4	4	0	9	0	3	0	0	3	25
Grand Total	27	46	1	3	77	4	48	6	1	59	8	22	34	3	67	1	25	6	1	33	236
Apprch %	35.1	59.7	1.3	3.9		6.8	81.4	10.2	1.7		11.9	32.8	50.7	4.5		3	75.8	18.2	3		
Total %	11.4	19.5	0.4	1.3	32.6	1.7	20.3	2.5	0.4	25	3.4	9.3	14.4	1.3	28.4	0.4	10.6	2.5	0.4	14	

SW 152nd Street & SW 157th Avenue

File Name : SW 152nd Street & SW 157th Avenue
Site Code : 00000000
Start Date : 5/24/2016
Page No : 2

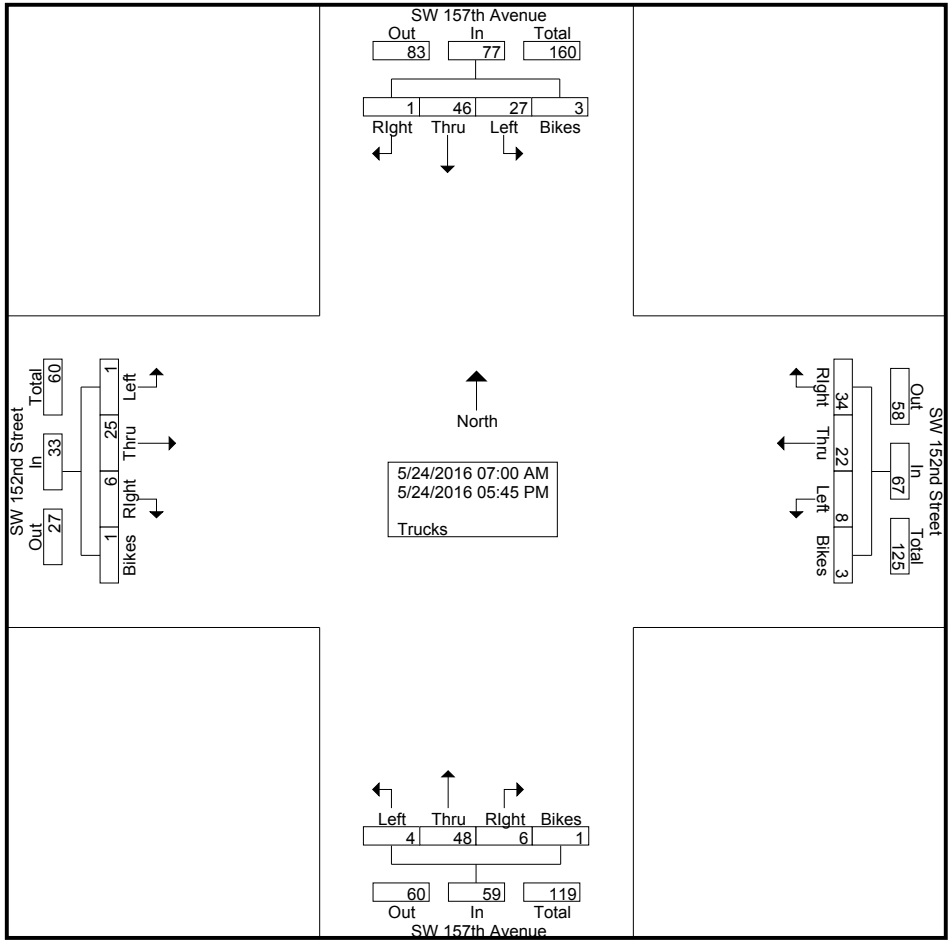

SW 152nd Street & SW 157th Avenue

File Name : SW 152nd Street & SW 157th Avenue
Site Code : 00000000
Start Date : 5/24/2016
Page No : 3

	SW 157th Avenue Southbound					SW 157th Avenue Northbound					SW 152nd Street Westbound					SW 152nd Street Eastbound					
Start Time	Left	Thru	RIght	Bikes	App. Total	Left	Thru	RIght	Bikes	App. Total	Left	Thru	RIght	Bikes	App. Total	Left	Thru	RIght	Bikes	App. Total	Int. Total
Peak Hour Analysis From 07:00 AM to 08:45 AM - Peak 1 of 1																					
Peak Hour for Entire Intersection Begins at 08:00 AM																					
08:00 AM	2	0	0	**2**	4	0	7	**1**	0	**8**	**1**	1	0	**2**	4	0	**2**	**1**	0	**3**	19
08:15 AM	1	**3**	0	0	4	0	6	0	**1**	7	0	**3**	2	0	5	0	1	0	**1**	2	18
08:30 AM	3	3	0	0	6	0	**8**	0	0	8	1	2	**4**	0	**7**	0	2	1	0	3	**24**
08:45 AM	**6**	2	0	0	**8**	0	5	0	0	5	0	0	4	0	4	0	2	0	0	2	19
Total Volume	12	8	0	2	22	0	26	1	1	28	2	6	10	2	20	0	7	2	1	10	80
% App. Total	54.5	36.4	0	9.1		0	92.9	3.6	3.6		10	30	50	10		0	70	20	10		
PHF	.500	.667	.000	.250	.688	.000	.813	.250	.250	.875	.500	.500	.625	.250	.714	.000	.875	.500	.250	.833	.833

SW 152nd Street & SW 157th Avenue

File Name : SW 152nd Street & SW 157th Avenue
Site Code : 00000000
Start Date : 5/24/2016
Page No : 4

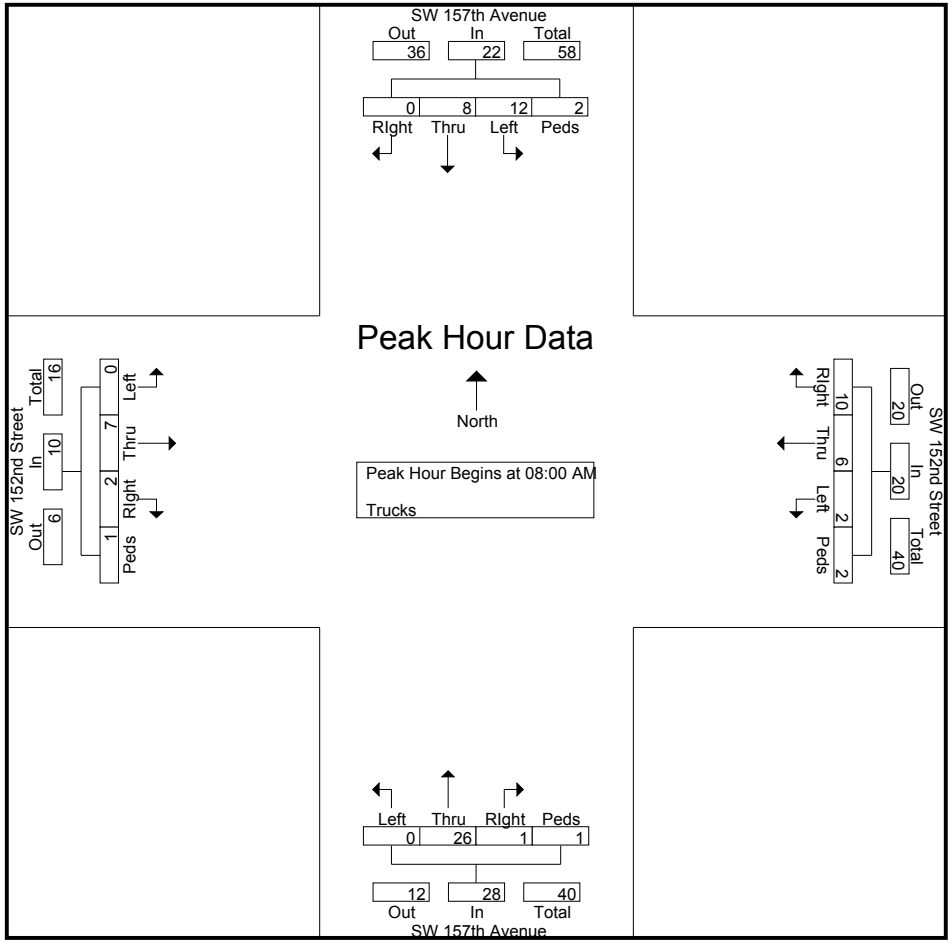

SW 152nd Street & SW 157th Avenue

File Name : SW 152nd Street & SW 157th Avenue
Site Code : 00000000
Start Date : 5/24/2016
Page No : 5

	SW 157th Avenue Southbound					SW 157th Avenue Northbound					SW 152nd Street Westbound					SW 152nd Street Eastbound					
Start Time	Left	Thru	RIght	Bikes	App. Total	Left	Thru	RIght	Bikes	App. Total	Left	Thru	RIght	Bikes	App. Total	Left	Thru	RIght	Bikes	App. Total	Int. Total
Peak Hour Analysis From 11:00 AM to 12:45 PM - Peak 1 of 1																					
Peak Hour for Entire Intersection Begins at 11:00 AM																					
11:00 AM	**1**	**1**	0	**1**	**3**	0	1	0	0	1	0	0	**2**	0	**2**	0	**1**	0	0	**1**	**7**
11:15 AM	1	1	0	0	2	0	**3**	0	0	**3**	0	**1**	1	0	2	0	0	0	0	0	7
11:30 AM	1	1	0	0	2	0	0	0	0	0	0	0	1	0	1	0	0	0	0	0	3
11:45 AM	1	0	0	0	1	0	0	0	0	0	**1**	0	1	0	2	0	1	0	0	1	4
Total Volume	4	3	0	1	8	0	4	0	0	4	1	1	5	0	7	0	2	0	0	2	21
% App. Total	50	37.5	0	12.5		0	100	0	0		14.3	14.3	71.4	0		0	100	0	0		
PHF	1.00	.750	.000	.250	.667	.000	.333	.000	.000	.333	.250	.250	.625	.000	.875	.000	.500	.000	.000	.500	.750

SW 152nd Street & SW 157th Avenue

File Name : SW 152nd Street & SW 157th Avenue
Site Code : 00000000
Start Date : 5/24/2016
Page No : 6

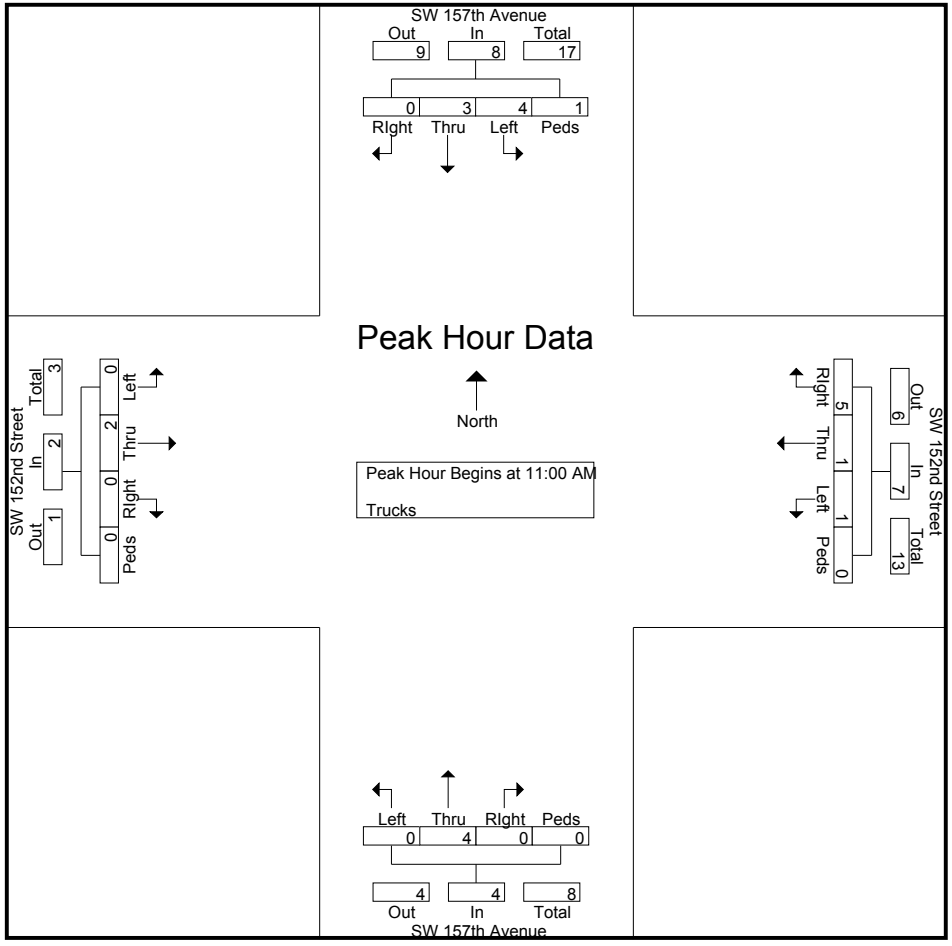

SW 152nd Street & SW 157th Avenue

File Name : SW 152nd Street & SW 157th Avenue
Site Code : 00000000
Start Date : 5/24/2016
Page No : 7

	SW 157th Avenue Southbound					SW 157th Avenue Northbound					SW 152nd Street Westbound					SW 152nd Street Eastbound					
Start Time	Left	Thru	RIght	Bikes	App. Total	Left	Thru	RIght	Bikes	App. Total	Left	Thru	RIght	Bikes	App. Total	Left	Thru	RIght	Bikes	App. Total	Int. Total
Peak Hour Analysis From 04:00 PM to 05:45 PM - Peak 1 of 1																					
Peak Hour for Entire Intersection Begins at 04:00 PM																					
04:00 PM	**3**	**5**	0	0	**8**	0	2	**2**	0	**4**	0	**1**	**4**	0	**5**	0	0	**1**	0	1	**18**
04:15 PM	3	1	0	0	4	0	**4**	0	0	4	0	1	2	**1**	4	0	**2**	1	0	3	15
04:30 PM	0	2	0	0	2	0	0	0	0	0	**1**	1	0	0	2	0	1	1	0	2	6
04:45 PM	2	5	**1**	0	8	0	0	1	0	1	0	0	1	0	1	**1**	2	1	0	**4**	14
Total Volume	8	13	1	0	22	0	6	3	0	9	1	3	7	1	12	1	5	4	0	10	53
% App. Total	36.4	59.1	4.5	0		0	66.7	33.3	0		8.3	25	58.3	8.3		10	50	40	0		
PHF	.667	.650	.250	.000	.688	.000	.375	.375	.000	.563	.250	.750	.438	.250	.600	.250	.625	1.00	.000	.625	.736

SW 152nd Street & SW 157th Avenue

File Name : SW 152nd Street & SW 157th Avenue
Site Code : 00000000
Start Date : 5/24/2016
Page No : 8

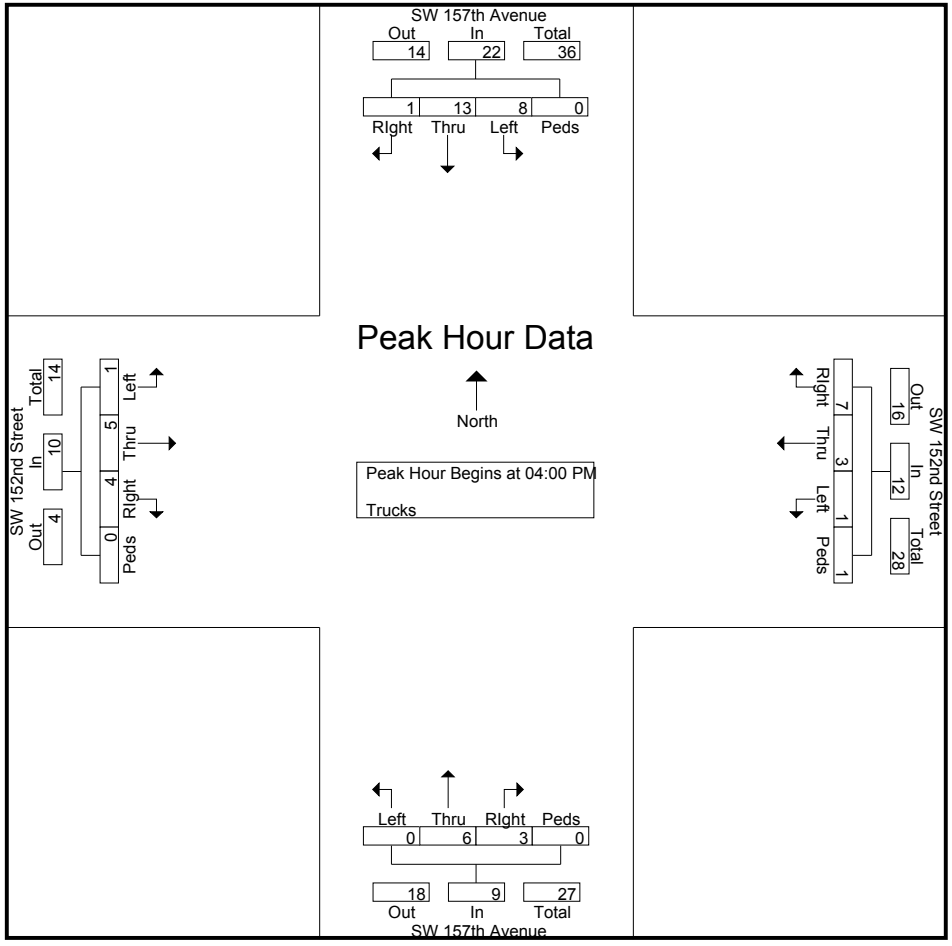

SW 152nd Street & SW 157th Avenue

File Name : SW 152nd Street & SW 157th Avenue
Site Code : 00000000
Start Date : 5/24/2016
Page No : 1

Groups Printed- Turns

	SW 157th Avenue Southbound					SW 157th Avenue Northbound					SW 152nd Street Westbound					SW 152nd Street Eastbound					
Start Time	Left	Thru	RIght	Peds/Bike	App. Total	Left	Thru	RIght	Peds/Bike	App. Total	Left	Thru	RIght	Peds/Bike	App. Total	Left	Thru	RIght	Peds/Bike	App. Total	Int. Total
*** BREAK ***																					
11:00 AM	1	0	0	0	1	0	0	0	0	0	0	0	0	0	0	0	0	0	0	0	1
11:15 AM	1	0	0	0	1	0	0	0	0	0	0	0	0	0	0	0	0	0	0	0	1
*** BREAK ***																					
Total	2	0	0	0	2	0	0	0	0	0	0	0	0	0	0	0	0	0	0	0	2
12:00 PM	1	0	0	0	1	0	0	0	0	0	0	0	0	0	0	0	0	0	0	0	1
*** BREAK ***																					
Total	1	0	0	0	1	0	0	0	0	0	0	0	0	0	0	0	0	0	0	0	1
*** BREAK ***																					
Grand Total	3	0	0	0	3	0	0	0	0	0	0	0	0	0	0	0	0	0	0	0	3
Apprch %	100	0	0	0		0	0	0	0		0	0	0	0		0	0	0	0		
Total %	100	0	0	0	100	0	0	0	0	0	0	0	0	0	0	0	0	0	0	0	

SW 152nd Street & SW 157th Avenue

File Name : SW 152nd Street & SW 157th Avenue
Site Code : 00000000
Start Date : 5/24/2016
Page No : 2

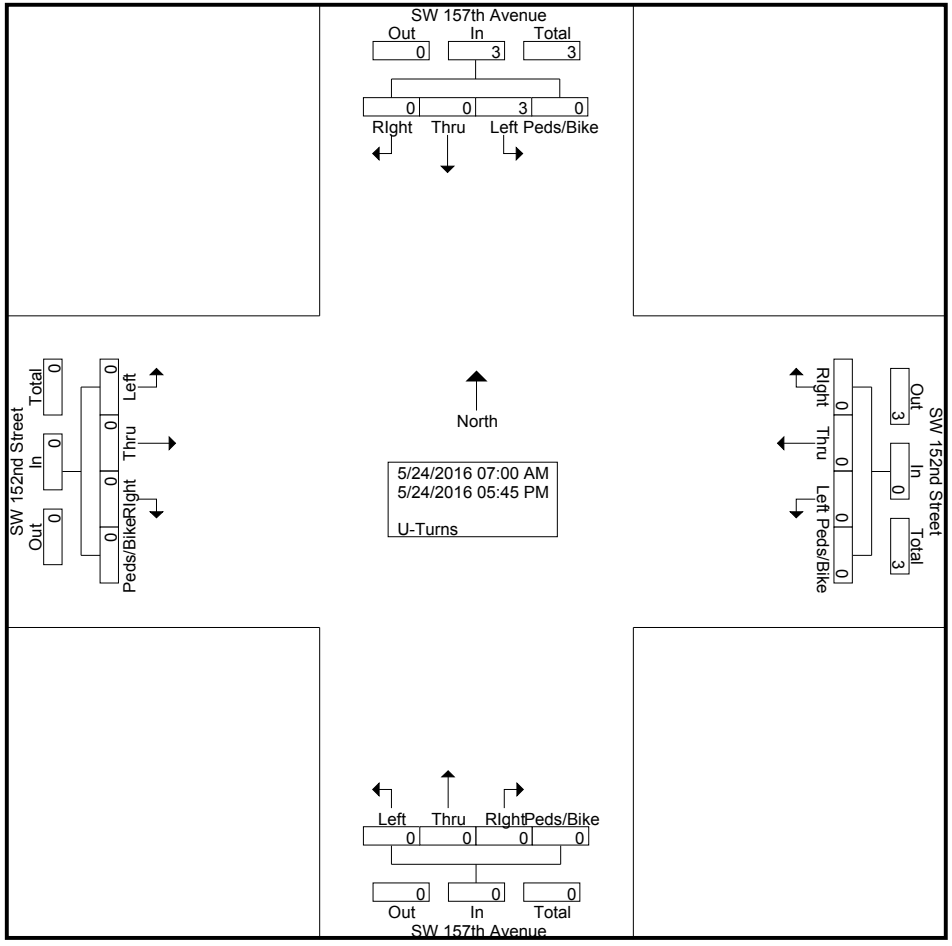

SW 152nd Street & SW 157th Avenue

File Name : SW 152nd Street & SW 157th Avenue
Site Code : 00000000
Start Date : 5/24/2016
Page No : 3

	SW 157th Avenue Southbound					SW 157th Avenue Northbound					SW 152nd Street Westbound					SW 152nd Street Eastbound					
Start Time	Left	Thru	RIght	Peds/Bike	App. Total	Left	Thru	RIght	Peds/Bike	App. Total	Left	Thru	RIght	Peds/Bike	App. Total	Left	Thru	RIght	Peds/Bike	App. Total	Int. Total
Peak Hour Analysis From 07:00 AM to 08:45 AM - Peak 1 of 1																					
Peak Hour for Entire Intersection Begins at 07:00 AM																					
07:00 AM	0	0	0	0	0	0	0	0	0	0	0	0	0	0	0	0	0	0	0	0	0
07:15 AM	0	0	0	0	0	0	0	0	0	0	0	0	0	0	0	0	0	0	0	0	0
07:30 AM	0	0	0	0	0	0	0	0	0	0	0	0	0	0	0	0	0	0	0	0	0
07:45 AM	0	0	0	0	0	0	0	0	0	0	0	0	0	0	0	0	0	0	0	0	0
Total Volume	0	0	0	0	0	0	0	0	0	0	0	0	0	0	0	0	0	0	0	0	0
% App. Total	0	0	0	0		0	0	0	0		0	0	0	0		0	0	0	0		
PHF	.000	.000	.000	.000	.000	.000	.000	.000	.000	.000	.000	.000	.000	.000	.000	.000	.000	.000	.000	.000	.000

SW 152nd Street & SW 157th Avenue

File Name : SW 152nd Street & SW 157th Avenue
Site Code : 00000000
Start Date : 5/24/2016
Page No : 4

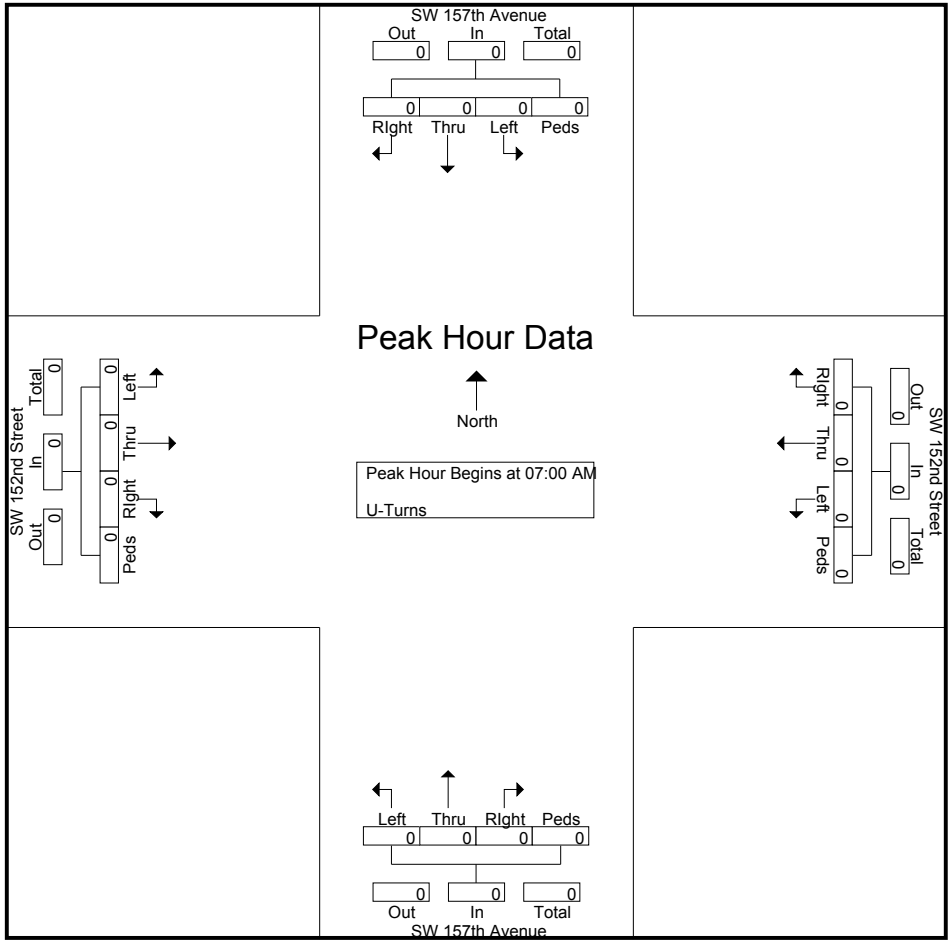

SW 152nd Street & SW 157th Avenue

File Name : SW 152nd Street & SW 157th Avenue
Site Code : 00000000
Start Date : 5/24/2016
Page No : 5

	SW 157th Avenue Southbound					SW 157th Avenue Northbound					SW 152nd Street Westbound					SW 152nd Street Eastbound					
Start Time	Left	Thru	RIght	Peds/Bike	App. Total	Left	Thru	RIght	Peds/Bike	App. Total	Left	Thru	RIght	Peds/Bike	App. Total	Left	Thru	RIght	Peds/Bike	App. Total	Int. Total
Peak Hour Analysis From 11:00 AM to 12:45 PM - Peak 1 of 1																					
Peak Hour for Entire Intersection Begins at 11:00 AM																					
11:00 AM	**1**	0	0	0	**1**	0	0	0	0	0	0	0	0	0	0	0	0	0	0	0	**1**
11:15 AM	1	0	0	0	1	0	0	0	0	0	0	0	0	0	0	0	0	0	0	0	1
11:30 AM	0	0	0	0	0	0	0	0	0	0	0	0	0	0	0	0	0	0	0	0	0
11:45 AM	0	0	0	0	0	0	0	0	0	0	0	0	0	0	0	0	0	0	0	0	0
Total Volume	2	0	0	0	2	0	0	0	0	0	0	0	0	0	0	0	0	0	0	0	2
% App. Total	100	0	0	0		0	0	0	0		0	0	0	0		0	0	0	0		
PHF	.500	.000	.000	.000	.500	.000	.000	.000	.000	.000	.000	.000	.000	.000	.000	.000	.000	.000	.000	.000	.500

SW 152nd Street & SW 157th Avenue

File Name : SW 152nd Street & SW 157th Avenue
Site Code : 00000000
Start Date : 5/24/2016
Page No : 6

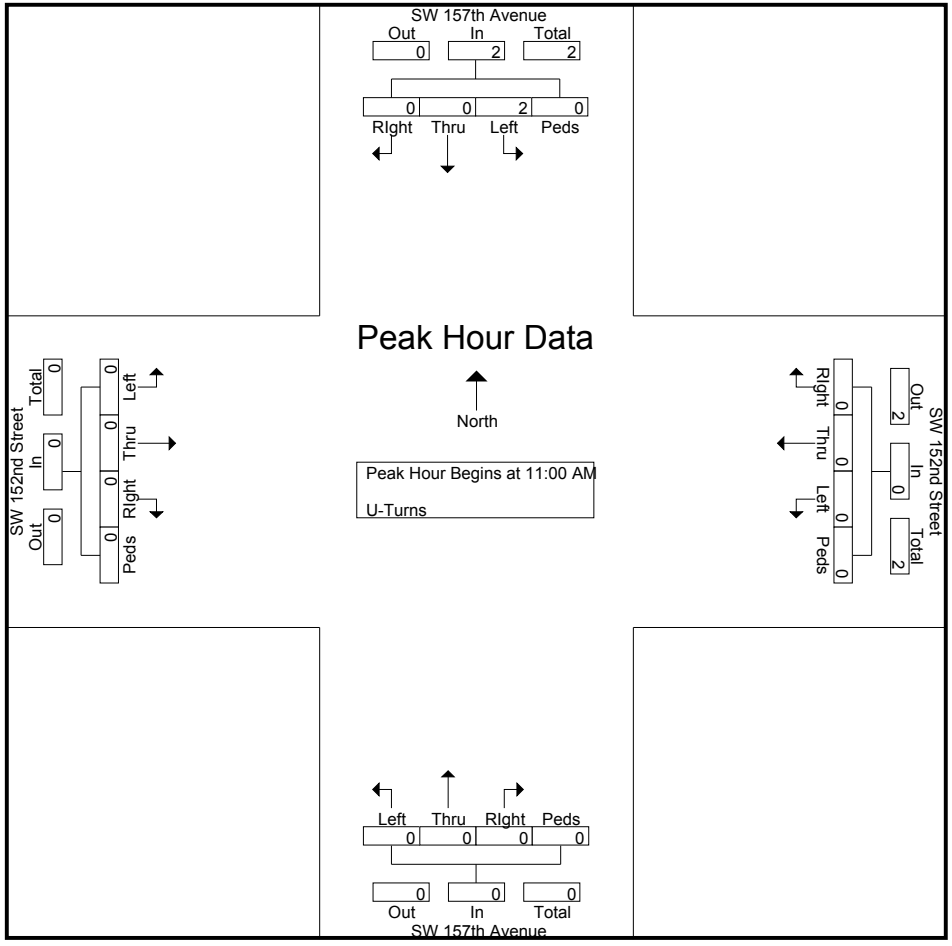

SW 152nd Street & SW 157th Avenue

File Name : SW 152nd Street & SW 157th Avenue
Site Code : 00000000
Start Date : 5/24/2016
Page No : 7

	SW 157th Avenue Southbound					SW 157th Avenue Northbound					SW 152nd Street Westbound					SW 152nd Street Eastbound					
Start Time	Left	Thru	RIght	Peds/Bike	App. Total	Left	Thru	RIght	Peds/Bike	App. Total	Left	Thru	RIght	Peds/Bike	App. Total	Left	Thru	RIght	Peds/Bike	App. Total	Int. Total
Peak Hour Analysis From 04:00 PM to 05:45 PM - Peak 1 of 1																					
Peak Hour for Entire Intersection Begins at 04:00 PM																					
04:00 PM	0	0	0	0	0	0	0	0	0	0	0	0	0	0	0	0	0	0	0	0	0
04:15 PM	0	0	0	0	0	0	0	0	0	0	0	0	0	0	0	0	0	0	0	0	0
04:30 PM	0	0	0	0	0	0	0	0	0	0	0	0	0	0	0	0	0	0	0	0	0
04:45 PM	0	0	0	0	0	0	0	0	0	0	0	0	0	0	0	0	0	0	0	0	0
Total Volume	0	0	0	0	0	0	0	0	0	0	0	0	0	0	0	0	0	0	0	0	0
% App. Total	0	0	0	0		0	0	0	0		0	0	0	0		0	0	0	0		
PHF	.000	.000	.000	.000	.000	.000	.000	.000	.000	.000	.000	.000	.000	.000	.000	.000	.000	.000	.000	.000	.000

SW 152nd Street & SW 157th Avenue

File Name : SW 152nd Street & SW 157th Avenue
Site Code : 00000000
Start Date : 5/24/2016
Page No : 8

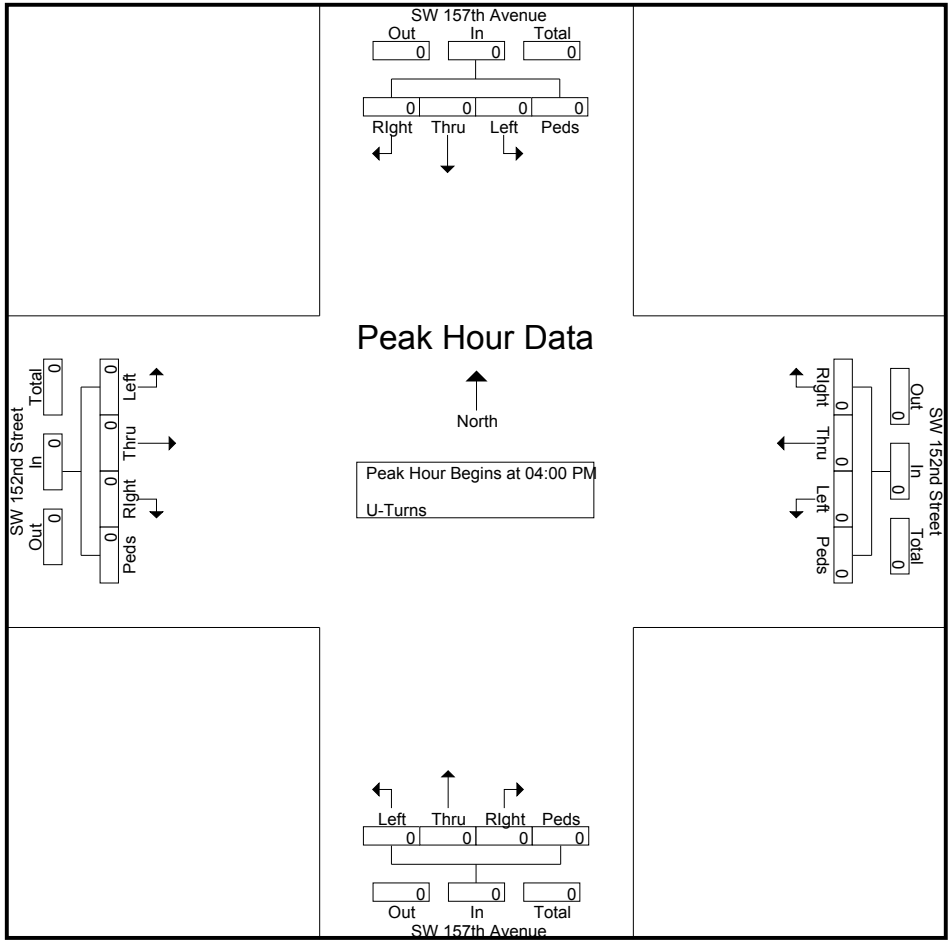

SW 152nd Street & SW 157th Avenue

File Name : SW 152nd Street & SW 157th Avenue
Site Code : 00000000
Start Date : 5/24/2016
Page No : 1

Groups Printed- Veh - Trucks - Turns

	SW 157th Avenue Southbound					SW 157th Avenue Northbound					SW 152nd Street Westbound					SW 152nd Street Eastbound					
Start Time	Left	Thru	RIght	Peds/Bike	App. Total	Left	Thru	RIght	Peds/Bike	App. Total	Left	Thru	RIght	Peds/Bike	App. Total	Left	Thru	RIght	Peds/Bike	App. Total	Int. Total
07:00 AM	48	90	3	0	141	17	247	10	0	274	21	21	128	0	170	8	28	17	0	53	638
07:15 AM	46	133	4	0	183	21	237	14	0	272	17	35	127	0	179	9	25	18	0	52	686
07:30 AM	51	157	3	0	211	30	260	9	0	299	12	52	136	0	200	11	35	18	0	64	774
07:45 AM	40	104	0	0	144	57	238	15	0	310	7	76	172	0	255	15	37	18	0	70	779
Total	185	484	10	0	679	125	982	48	0	1155	57	184	563	0	804	43	125	71	0	239	2877
08:00 AM	55	123	5	2	185	75	248	8	0	331	8	104	149	2	263	20	59	23	0	102	881
08:15 AM	64	151	8	0	223	73	215	8	1	297	12	85	165	0	262	27	65	29	1	122	904
08:30 AM	75	167	11	2	255	32	205	13	0	250	15	33	189	0	237	30	60	26	0	116	858
08:45 AM	62	157	4	0	223	25	220	13	0	258	6	30	160	0	196	6	50	17	0	73	750
Total	256	598	28	4	886	205	888	42	1	1136	41	252	663	2	958	83	234	95	1	413	3393
*** BREAK ***																					
11:00 AM	32	73	3	3	111	14	61	10	0	85	10	23	48	0	81	5	24	12	0	41	318
11:15 AM	48	52	3	0	103	10	51	8	0	69	12	29	49	0	90	7	37	8	0	52	314
11:30 AM	42	40	2	0	84	15	64	9	0	88	16	21	52	0	89	9	24	6	0	39	300
11:45 AM	38	62	4	3	107	19	51	9	0	79	10	30	50	0	90	4	37	8	0	49	325
Total	160	227	12	6	405	58	227	36	0	321	48	103	199	0	350	25	122	34	0	181	1257
12:00 PM	53	62	4	2	121	13	36	19	0	68	13	29	55	0	97	3	29	12	0	44	330
12:15 PM	44	71	2	1	118	12	55	10	0	77	10	35	57	0	102	6	43	20	0	69	366
12:30 PM	49	68	5	0	122	10	61	20	0	91	9	28	50	0	87	4	34	11	0	49	349
12:45 PM	43	56	2	1	102	13	47	12	0	72	8	36	49	0	93	10	19	16	0	45	312
Total	189	257	13	4	463	48	199	61	0	308	40	128	211	0	379	23	125	59	0	207	1357
*** BREAK ***																					
04:00 PM	107	176	4	0	287	30	105	14	0	149	20	49	106	0	175	3	71	35	0	109	720
04:15 PM	91	230	3	1	325	32	96	16	0	144	19	42	83	1	145	2	61	41	0	104	718
04:30 PM	112	198	3	4	317	26	85	11	0	122	18	38	70	0	126	6	51	21	0	78	643
04:45 PM	92	178	5	2	277	26	100	15	0	141	22	35	61	0	118	7	38	32	0	77	613
Total	402	782	15	7	1206	114	386	56	0	556	79	164	320	1	564	18	221	129	0	368	2694
05:00 PM	81	151	8	0	240	21	105	17	0	143	21	43	71	0	135	7	34	35	0	76	594
05:15 PM	94	196	7	1	298	18	93	19	0	130	11	38	81	0	130	8	32	21	0	61	619
05:30 PM	93	179	6	2	280	27	128	11	0	166	16	48	66	0	130	9	39	29	0	77	653
05:45 PM	81	201	7	0	289	20	97	23	0	140	26	44	86	0	156	7	33	30	0	70	655
Total	349	727	28	3	1107	86	423	70	0	579	74	173	304	0	551	31	138	115	0	284	2521
Grand Total	1541	3075	106	24	4746	636	3105	313	1	4055	339	1004	2260	3	3606	223	965	503	1	1692	14099
Apprch %	32.5	64.8	2.2	0.5		15.7	76.6	7.7	0		9.4	27.8	62.7	0.1		13.2	57	29.7	0.1		
Total %	10.9	21.8	0.8	0.2	33.7	4.5	22	2.2	0	28.8	2.4	7.1	16	0	25.6	1.6	6.8	3.6	0	12	
Veh	1511	3029	105	21	4666	632	3057	307	0	3996	331	982	2226	0	3539	222	940	497	0	1659	13860
% Veh	98.1	98.5	99.1	87.5	98.3	99.4	98.5	98.1	0	98.5	97.6	97.8	98.5	0	98.1	99.6	97.4	98.8	0	98	98.3
Trucks	27	46	1	3	77	4	48	6	1	59	8	22	34	3	67	1	25	6	1	33	236
% Trucks	1.8	1.5	0.9	12.5	1.6	0.6	1.5	1.9	100	1.5	2.4	2.2	1.5	100	1.9	0.4	2.6	1.2	100	2	1.7

SW 152nd Street & SW 157th Avenue

File Name : SW 152nd Street & SW 157th Avenue
Site Code : 00000000
Start Date : 5/24/2016
Page No : 2

Groups Printed- Veh - Trucks - Turns

	SW 157th Avenue Southbound					SW 157th Avenue Northbound					SW 152nd Street Westbound					SW 152nd Street Eastbound					
	Left	Thru	RIght	Peds/Bike	App. Total	Left	Thru	RIght	Peds/Bike	App. Total	Left	Thru	RIght	Peds/Bike	App. Total	Left	Thru	RIght	Peds/Bike	App. Total	Int. Total
U-Turns	3	0	0	0	3	0	0	0	0	0	0	0	0	0	0	0	0	0	0	0	3
% U-Turns	0.2	0	0	0	0.1	0	0	0	0	0	0	0	0	0	0	0	0	0	0	0	0

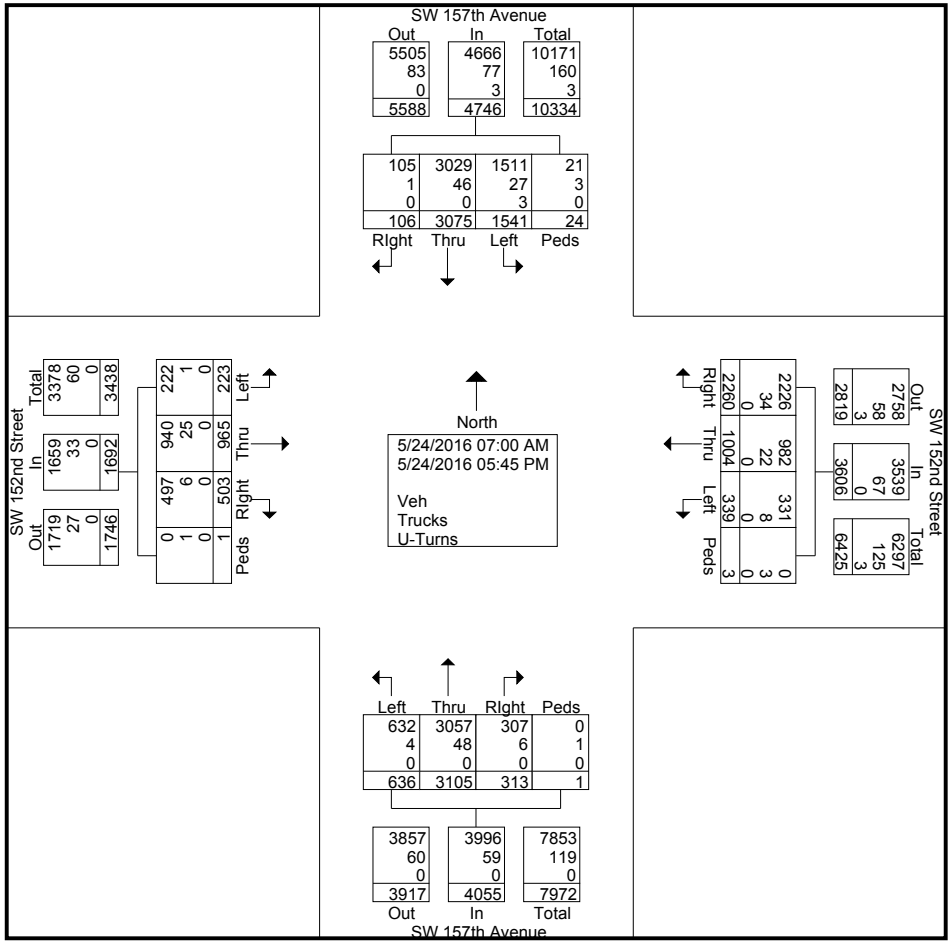

SW 152nd Street & SW 157th Avenue

File Name : SW 152nd Street & SW 157th Avenue
Site Code : 00000000
Start Date : 5/24/2016
Page No : 3

	SW 157th Avenue Southbound					SW 157th Avenue Northbound					SW 152nd Street Westbound					SW 152nd Street Eastbound					
Start Time	Left	Thru	RIght	Peds/Bike	App. Total	Left	Thru	RIght	Peds/Bike	App. Total	Left	Thru	RIght	Peds/Bike	App. Total	Left	Thru	RIght	Peds/Bike	App. Total	Int. Total
Peak Hour Analysis From 07:00 AM to 08:45 AM - Peak 1 of 1																					
Peak Hour for Entire Intersection Begins at 07:45 AM																					
07:45 AM	40	104	0	0	144	57	238	**15**	0	310	7	76	172	0	255	15	37	18	0	70	779
08:00 AM	55	123	5	**2**	185	**75**	**248**	8	0	**331**	8	**104**	149	**2**	**263**	20	59	23	0	102	881
08:15 AM	64	151	8	0	223	73	215	8	**1**	297	12	85	165	0	262	27	**65**	**29**	**1**	**122**	**904**
08:30 AM	**75**	**167**	**11**	2	**255**	32	205	13	0	250	**15**	33	**189**	0	237	**30**	60	26	0	116	858
Total Volume	234	545	24	4	807	237	906	44	1	1188	42	298	675	2	1017	92	221	96	1	410	3422
% App. Total	29	67.5	3	0.5		19.9	76.3	3.7	0.1		4.1	29.3	66.4	0.2		22.4	53.9	23.4	0.2		
PHF	.780	.816	.545	.500	.791	.790	.913	.733	.250	.897	.700	.716	.893	.250	.967	.767	.850	.828	.250	.840	.946

SW 152nd Street & SW 157th Avenue

File Name : SW 152nd Street & SW 157th Avenue
Site Code : 00000000
Start Date : 5/24/2016
Page No : 4

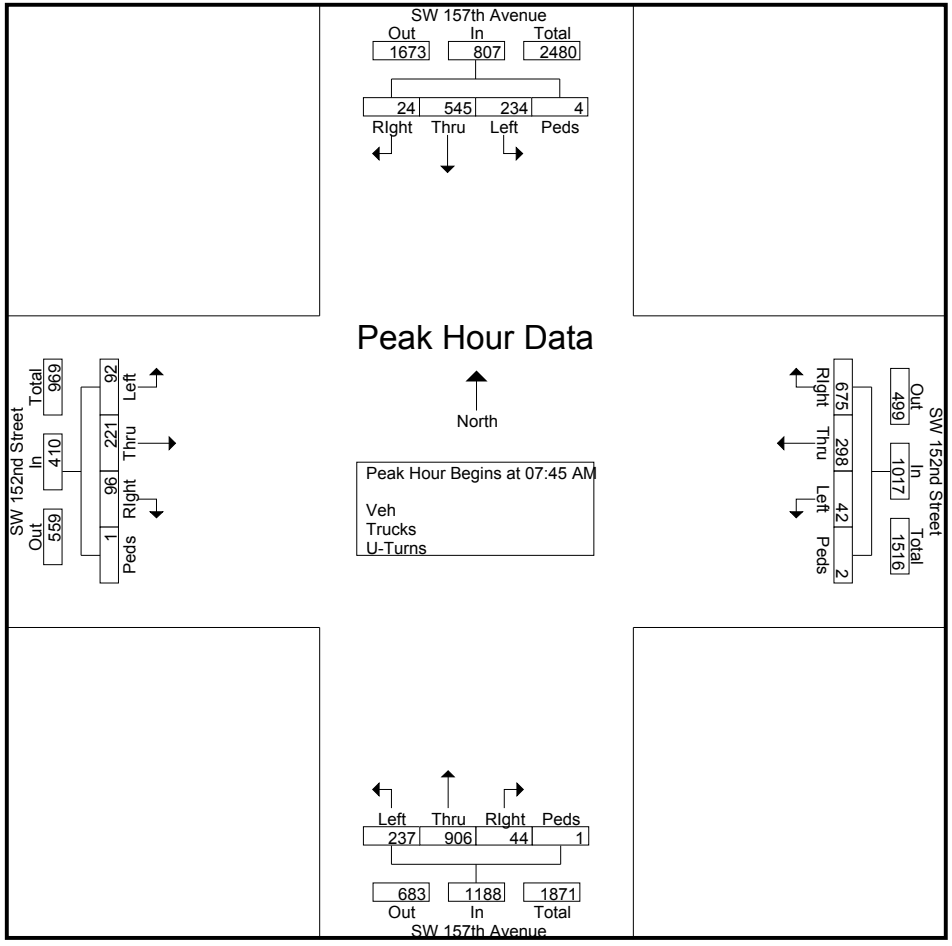

SW 152nd Street & SW 157th Avenue

File Name : SW 152nd Street & SW 157th Avenue
Site Code : 00000000
Start Date : 5/24/2016
Page No : 5

	SW 157th Avenue Southbound					SW 157th Avenue Northbound					SW 152nd Street Westbound					SW 152nd Street Eastbound					
Start Time	Left	Thru	RIght	Peds/Bike	App. Total	Left	Thru	RIght	Peds/Bike	App. Total	Left	Thru	RIght	Peds/Bike	App. Total	Left	Thru	RIght	Peds/Bike	App. Total	Int. Total
Peak Hour Analysis From 11:00 AM to 12:45 PM - Peak 1 of 1																					
Peak Hour for Entire Intersection Begins at 11:45 AM																					
11:45 AM	38	62	4	**3**	107	**19**	51	9	0	79	10	30	50	0	90	4	37	8	0	49	325
12:00 PM	**53**	62	4	2	121	13	36	19	0	68	**13**	29	55	0	97	3	29	12	0	44	330
12:15 PM	44	**71**	2	1	118	12	55	10	0	77	10	**35**	**57**	0	**102**	**6**	**43**	**20**	0	**69**	**366**
12:30 PM	49	68	**5**	0	**122**	10	**61**	**20**	0	**91**	9	28	50	0	87	4	34	11	0	49	349
Total Volume	184	263	15	6	468	54	203	58	0	315	42	122	212	0	376	17	143	51	0	211	1370
% App. Total	39.3	56.2	3.2	1.3		17.1	64.4	18.4	0		11.2	32.4	56.4	0		8.1	67.8	24.2	0		
PHF	.868	.926	.750	.500	.959	.711	.832	.725	.000	.865	.808	.871	.930	.000	.922	.708	.831	.638	.000	.764	.936

SW 152nd Street & SW 157th Avenue

File Name : SW 152nd Street & SW 157th Avenue
Site Code : 00000000
Start Date : 5/24/2016
Page No : 6

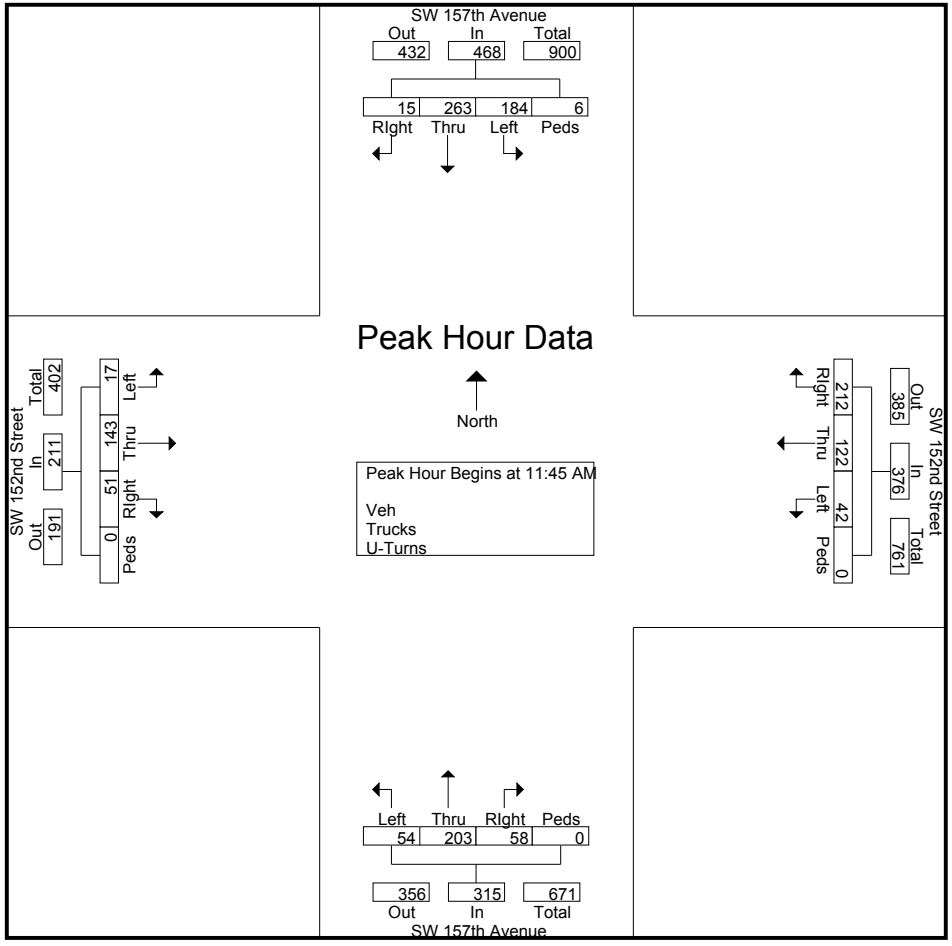

SW 152nd Street & SW 157th Avenue

File Name : SW 152nd Street & SW 157th Avenue
Site Code : 00000000
Start Date : 5/24/2016
Page No : 7

	SW 157th Avenue Southbound					SW 157th Avenue Northbound					SW 152nd Street Westbound					SW 152nd Street Eastbound					
Start Time	Left	Thru	RIght	Peds/Bike	App. Total	Left	Thru	RIght	Peds/Bike	App. Total	Left	Thru	RIght	Peds/Bike	App. Total	Left	Thru	RIght	Peds/Bike	App. Total	Int. Total
Peak Hour Analysis From 04:00 PM to 05:45 PM - Peak 1 of 1																					
Peak Hour for Entire Intersection Begins at 04:00 PM																					
04:00 PM	107	176	4	0	287	30	**105**	14	0	**149**	20	**49**	**106**	0	**175**	3	**71**	35	0	**109**	**720**
04:15 PM	91	**230**	3	1	**325**	**32**	96	**16**	0	144	19	42	83	**1**	145	2	61	**41**	0	104	718
04:30 PM	**112**	198	3	**4**	317	26	85	11	0	122	18	38	70	0	126	6	51	21	0	78	643
04:45 PM	92	178	**5**	2	277	26	100	15	0	141	**22**	35	61	0	118	**7**	38	32	0	77	613
Total Volume	402	782	15	7	1206	114	386	56	0	556	79	164	320	1	564	18	221	129	0	368	2694
% App. Total	33.3	64.8	1.2	0.6		20.5	69.4	10.1	0		14	29.1	56.7	0.2		4.9	60.1	35.1	0		
PHF	.897	.850	.750	.438	.928	.891	.919	.875	.000	.933	.898	.837	.755	.250	.806	.643	.778	.787	.000	.844	.935

SW 152nd Street & SW 157th Avenue

File Name : SW 152nd Street & SW 157th Avenue
Site Code : 00000000
Start Date : 5/24/2016
Page No : 8

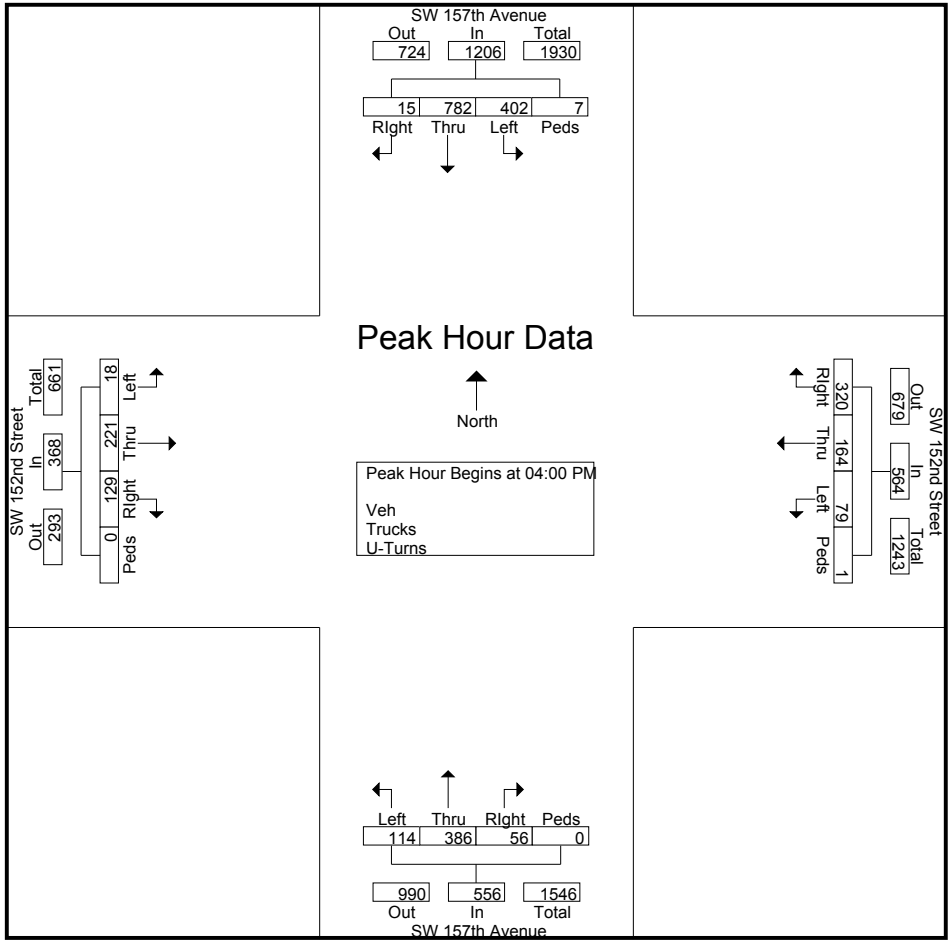

Appendix B: Existing Peak Period Conditions in the Study Corridor

Arterial Level of Service: EB SW 152nd St #5

Cross Street	Node	Delay (s/veh)	Travel time (s)	Dist (mi)	Arterial Speed
SW 152nd Ave	25	18.8	61.0	0.5	30
	64	3.3	12.2	0.1	28
	33	2.0	30.1	0.3	37
SW 147th Ave	24	3.6	12.1	0.1	30
SW 142nd Ave	23	13.5	56.2	0.5	32
Publix Entrance	22	61.5	95.4	0.4	15
SW 137th Ave	2	95.7	106.3	0.1	4
Total		198.5	373.4	2.0	20

Arterial Level of Service: WB SW 152nd St #5

Cross Street	Node	Delay (s/veh)	Travel time (s)	Dist (mi)	Arterial Speed
Publix Entrance	22	5.0	16.5	0.1	25
	23	8.1	42.2	0.4	34
SW 147th Ave	24	7.7	50.8	0.5	35
	33	1.3	10.8	0.1	34
	64	3.6	31.6	0.3	36
SW 152nd Ave	25	20.0	27.9	0.1	12
SW 157th Ave	1	54.3	95.7	0.5	19
Total		99.9	275.5	2.0	27

Arterial Level of Service: EB SW 152nd St #4

Cross Street	Node	Delay (s/veh)	Travel time (s)	Dist (mi)	Arterial Speed
	41	5.1	20.2	0.2	29
SW 132nd Ave	21	3.4	22.9	0.2	36
SW 129th Ave	20	5.4	49.9	0.5	37
SW 127th Ave	3	22.8	51.6	0.3	23
SW 124th Ave	19	11.7	19.7	0.1	16
SW 122nd Ave	18	80.6	116.0	0.2	7
SW 117th Ave	4	81.6	124.5	0.5	14
Total		210.6	405.0	2.0	19

Arterial Level of Service: WB SW 152nd St #4

Cross Street	Node	Delay (s/veh)	Travel time (s)	Dist (mi)	Arterial Speed
SW 122nd Ave	18	15.6	53.4	0.5	33
SW 124th Ave	19	5.4	22.8	0.2	32
SW 127th Ave	3	12.4	20.6	0.1	15
SW 129th Ave	20	4.6	34.1	0.3	34
SW 132nd Ave	21	28.5	72.6	0.5	25
	41	4.8	26.4	0.2	31
SW 137th Ave	2	44.4	56.8	0.2	10
Total		115.8	286.8	2.0	25

Arterial Level of Service: EB SW 152nd St #3

Cross Street	Node	Delay (s/veh)	Travel time (s)	Dist (mi)	Arterial Speed
West Turnpike Ramp	5	4.7	17.1	0.1	29
East Turnpike Ramp	6	3.1	9.1	0.1	26
	63	2.6	10.7	0.1	34
SW 112th Ave	7	38.3	52.4	0.2	13
Total		48.8	89.3	0.5	20

Arterial Level of Service: WB SW 152nd St #3

Cross Street	Node	Delay (s/veh)	Travel time (s)	Dist (mi)	Arterial Speed
	63	5.3	21.1	0.2	33
East Turnpike Ramp	6	14.6	22.6	0.1	16
West Turnpike Ramp	5	35.6	41.4	0.1	6
SW 117th Ave	4	206.6	355.5	0.1	2
Total		262.1	440.6	0.5	6

Arterial Level of Service: EB SW 152nd St #2

Cross Street	Node	Delay (s/veh)	Travel time (s)	Dist (mi)	Arterial Speed
SW 107th Ave	8	8.3	48.8	0.5	38
SW 102nd Ave	17	13.9	52.0	0.5	35
SW 99th Ct	16	49.3	66.3	0.2	12
SW 93rd Ave	9	371.4	418.3	0.7	6
	80	49.9	54.2	0.1	4
	10	67.9	80.0	0.1	3
US 1 / S Dixie Hwy	11	60.2	62.7	0.0	2
Total		621.0	782.2	2.1	10

Arterial Level of Service: WB SW 152nd St #2

Cross Street	Node	Delay (s/veh)	Travel time (s)	Dist (mi)	Arterial Speed
SW 92nd Ave	10	4.4	9.9	0.0	16
	80	1.8	7.8	0.1	32
SW 93rd Ave	9	12.1	16.4	0.1	12
SW 99th Ct	16	6.1	57.0	0.7	43
SW 102nd Ave	17	14.0	30.5	0.2	25
SW 107th Ave	8	8.0	46.7	0.5	39
SW 112th Ave	7	40.0	80.0	0.5	23
Total		86.4	248.2	2.1	30

Arterial Level of Service: EB SW 152nd St #1

Cross Street	Node	Delay (s/veh)	Travel time (s)	Dist (mi)	Arterial Speed
	47	4.3	16.0	0.1	24
SW 87th Ave	12	10.5	42.9	0.4	30
SW 82nd Ave	13	26.6	76.0	0.5	24
SW 77th Ave	14	10.8	55.3	0.5	33
Old Cutler Rd	15	37.8	76.2	0.4	18
Total		90.1	266.5	1.9	25

Arterial Level of Service: WB SW 152nd St #1

Cross Street	Node	Delay (s/veh)	Travel time (s)	Dist (mi)	Arterial Speed
SW 77th Ave	14	8.0	35.6	0.4	38
SW 82nd Ave	13	24.0	67.7	0.5	27
SW 87th Ave	12	17.1	60.7	0.5	30
	47	4.5	41.4	0.4	31
US 1 / S Dixie Hwy	11	81.3	90.3	0.1	4
Total		134.9	295.7	1.9	23

Arterial Level of Service: EB SW 152nd St #5

Cross Street	Node	Delay (s/veh)	Travel time (s)	Dist (mi)	Arterial Speed
SW 152nd Ave	25	13.4	53.8	0.5	34
	64	2.8	11.7	0.1	29
	33	1.8	29.9	0.3	38
SW 147th Ave	24	4.3	12.8	0.1	29
SW 142nd Ave	23	14.4	57.4	0.5	31
Publix Entrance	22	10.4	44.7	0.4	32
SW 137th Ave	2	60.5	70.5	0.1	6
Total		107.7	280.9	2.0	26

Arterial Level of Service: WB SW 152nd St #5

Cross Street	Node	Delay (s/veh)	Travel time (s)	Dist (mi)	Arterial Speed
Publix Entrance	22	8.1	20.0	0.1	21
	23	19.2	53.1	0.4	27
SW 147th Ave	24	9.7	52.7	0.5	34
	33	1.3	10.8	0.1	34
	64	2.4	30.4	0.3	37
SW 152nd Ave	25	9.8	17.4	0.1	19
SW 157th Ave	1	24.2	66.5	0.5	27
Total		74.7	251.0	2.0	29

Arterial Level of Service: EB SW 152nd St #4

Cross Street	Node	Delay (s/veh)	Travel time (s)	Dist (mi)	Arterial Speed
	41	4.8	19.8	0.2	29
SW 132nd Ave	21	1.8	21.5	0.2	38
SW 129th Ave	20	3.9	48.5	0.5	38
SW 127th Ave	3	8.5	37.3	0.3	31
SW 124th Ave	19	8.0	16.0	0.1	20
SW 122nd Ave	18	58.0	81.0	0.2	10
SW 117th Ave	4	104.8	148.1	0.5	12
Total		189.7	372.2	2.0	20

Arterial Level of Service: WB SW 152nd St #4

Cross Street	Node	Delay (s/veh)	Travel time (s)	Dist (mi)	Arterial Speed
SW 122nd Ave	18	8.6	52.5	0.5	34
SW 124th Ave	19	6.0	23.8	0.2	31
SW 127th Ave	3	8.6	16.8	0.1	19
SW 129th Ave	20	7.4	36.8	0.3	32
SW 132nd Ave	21	17.7	62.0	0.5	30
	41	5.4	27.2	0.2	30
SW 137th Ave	2	73.4	86.2	0.2	7
Total		127.0	305.5	2.0	24

Arterial Level of Service: EB SW 152nd St #3

Cross Street	Node	Delay (s/veh)	Travel time (s)	Dist (mi)	Arterial Speed
West Turnpike Ramp	5	4.1	16.8	0.1	29
East Turnpike Ramp	6	5.3	11.2	0.1	21
	63	2.1	10.2	0.1	35
SW 112th Ave	7	33.6	47.5	0.2	15
Total		45.0	85.6	0.5	21

Arterial Level of Service: WB SW 152nd St #3

Cross Street	Node	Delay (s/veh)	Travel time (s)	Dist (mi)	Arterial Speed
	63	19.8	35.8	0.2	19
East Turnpike Ramp	6	30.0	38.1	0.1	9
West Turnpike Ramp	5	29.0	35.2	0.1	7
SW 117th Ave	4	107.4	125.0	0.1	4
Total		186.3	234.0	0.5	8

Arterial Level of Service: EB SW 152nd St #2

Cross Street	Node	Delay (s/veh)	Travel time (s)	Dist (mi)	Arterial Speed
SW 107th Ave	8	6.3	46.6	0.5	39
SW 102nd Ave	17	5.9	43.6	0.5	42
SW 99th Ct	16	3.6	21.2	0.2	36
SW 93rd Ave	9	12.2	64.9	0.7	38
	79	25.6	29.9	0.1	7
	10	77.5	135.5	0.1	3
US 1 / S Dixie Hwy	11	114.1	118.8	0.0	1
Total		245.2	460.6	2.1	18

Arterial Level of Service: WB SW 152nd St #2

Cross Street	Node	Delay (s/veh)	Travel time (s)	Dist (mi)	Arterial Speed
SW 92nd Ave	10	4.7	10.1	0.0	15
	79	4.4	10.4	0.1	24
SW 93rd Ave	9	13.6	17.9	0.1	11
SW 99th Ct	16	11.0	62.1	0.7	39
SW 102nd Ave	17	17.2	33.7	0.2	23
SW 107th Ave	8	16.2	57.2	0.5	32
SW 112th Ave	7	44.7	84.4	0.5	22
Total		111.7	275.9	2.1	27

Arterial Level of Service: EB SW 152nd St #1

Cross Street	Node	Delay (s/veh)	Travel time (s)	Dist (mi)	Arterial Speed
	47	4.3	16.0	0.1	24
SW 87th Ave	12	10.7	46.4	0.4	28
SW 82nd Ave	13	42.2	90.5	0.5	20
SW 77th Ave	14	7.7	41.9	0.5	44
Old Cutler Rd	15	46.4	84.5	0.4	16
Total		111.2	279.3	1.9	24

Arterial Level of Service: WB SW 152nd St #1

Cross Street	Node	Delay (s/veh)	Travel time (s)	Dist (mi)	Arterial Speed
SW 77th Ave	14	20.6	54.2	0.4	25
SW 82nd Ave	13	37.1	82.6	0.5	22
SW 87th Ave	12	18.2	69.7	0.5	26
	47	6.2	43.2	0.4	30
US 1 / S Dixie Hwy	11	85.2	94.1	0.1	4
Total		167.3	343.7	1.9	20

Movement	EBL	EBT	EBR	WBL	WBT	WBR	NBL	NBT	NBR	SBL	SBT	SBR
Lane Configurations												
Traffic Volume (veh/h)	83	234	95	41	252	663	205	888	42	256	598	28
Future Volume (veh/h)	83	234	95	41	252	663	205	888	42	256	598	28
Number	5	2	12	1	6	16	3	8	18	7	4	14
Initial Q (Qb), veh	0	0	0	0	0	0	0	0	0	0	0	0
Ped-Bike Adj(A_pbT)	1.00		1.00	1.00		1.00	1.00		1.00	1.00		1.00
Parking Bus, Adj	1.00	1.00	1.00	1.00	1.00	1.00	1.00	1.00	1.00	1.00	1.00	1.00
Adj Sat Flow, veh/h/ln	1863	1863	1900	1863	1863	1863	1863	1863	1900	1863	1863	1900
Adj Flow Rate, veh/h	120	263	119	59	420	753	301	998	53	301	664	44
Adj No. of Lanes	1	1	0	1	1	1	1	2	0	1	2	0
Peak Hour Factor	0.69	0.89	0.80	0.70	0.60	0.88	0.68	0.89	0.79	0.85	0.90	0.64
Percent Heavy Veh, %	2	2	2	2	2	2	2	2	2	2	2	2
Cap, veh/h	199	449	203	299	676	575	398	1041	55	323	1082	72
Arrive On Green	0.04	0.37	0.37	0.03	0.36	0.36	0.13	0.30	0.30	0.15	0.32	0.32
Sat Flow, veh/h	1774	1216	550	1774	1863	1583	1774	3419	182	1774	3370	223
Grp Volume(v), veh/h	120	0	382	59	420	753	301	517	534	301	348	360
Grp Sat Flow(s),veh/h/ln	1774	0	1766	1774	1863	1583	1774	1770	1831	1774	1770	1823
Q Serve(g_s), s	5.5	0.0	25.8	3.1	27.4	53.7	17.0	42.4	42.4	19.9	24.6	24.7
Cycle Q Clear(g_c), s	5.5	0.0	25.8	3.1	27.4	53.7	17.0	42.4	42.4	19.9	24.6	24.7
Prop In Lane	1.00		0.31	1.00		1.00	1.00		0.10	1.00		0.12
Lane Grp Cap(c), veh/h	199	0	652	299	676	575	398	539	557	323	568	585
V/C Ratio(X)	0.60	0.00	0.59	0.20	0.62	1.31	0.76	0.96	0.96	0.93	0.61	0.61
Avail Cap(c_a), veh/h	199	0	652	308	676	575	491	546	565	341	568	585
HCM Platoon Ratio	1.00	1.00	1.00	1.00	1.00	1.00	1.00	1.00	1.00	1.00	1.00	1.00
Upstream Filter(I)	1.00	0.00	1.00	1.00	1.00	1.00	1.00	1.00	1.00	1.00	1.00	1.00
Uniform Delay (d), s/veh	35.2	0.0	37.6	30.3	38.7	47.1	31.0	50.5	50.5	44.4	42.4	42.5
Incr Delay (d2), s/veh	5.0	0.0	1.4	0.3	1.7	151.5	5.3	28.2	27.6	31.1	2.0	1.9
Initial Q Delay(d3),s/veh	0.0	0.0	0.0	0.0	0.0	0.0	0.0	0.0	0.0	0.0	0.0	0.0
%ile BackOfQ(50%),veh/ln	2.0	0.0	12.8	1.5	14.4	47.7	8.9	24.9	25.7	14.9	12.3	12.7
LnGrp Delay(d),s/veh	40.2	0.0	38.9	30.6	40.5	198.6	36.3	78.7	78.2	75.5	44.4	44.4
LnGrp LOS	D		D	C	D	F	D	E	E	E	D	D
Approach Vol, veh/h		502			1232			1352			1009	
Approach Delay, s/veh		39.2			136.6			69.1			53.7	
Approach LOS		D			F			E			D	

Timer	1	2	3	4	5	6	7	8
Assigned Phs	1	2	3	4	5	6	7	8
Phs Duration (G+Y+Rc), s	10.0	60.0	25.0	52.9	10.9	59.1	27.4	50.4
Change Period (Y+Rc), s	5.4	5.4	5.4	5.4	5.4	5.4	5.4	5.4
Max Green Setting (Gmax), s	5.4	53.8	27.4	41.8	5.5	53.7	23.6	45.6
Max Q Clear Time (g_c+I1), s	5.1	27.8	19.0	26.7	7.5	55.7	21.9	44.4
Green Ext Time (p_c), s	0.0	9.1	0.6	9.7	0.0	0.0	0.2	0.6

Intersection Summary	
HCM 2010 Ctrl Delay	81.9
HCM 2010 LOS	F

Movement	EBL	EBT	EBR	WBL	WBT	WBR	NBL	NBT	NBR	SBL	SBT	SBR
Lane Configurations												
Traffic Volume (veh/h)	371	922	49	296	511	616	52	1336	448	295	1015	96
Future Volume (veh/h)	371	922	49	296	511	616	52	1336	448	295	1015	96
Number	5	2	12	1	6	16	3	8	18	7	4	14
Initial Q (Qb), veh	0	0	0	0	0	0	0	0	0	0	0	0
Ped-Bike Adj(A_pbT)	1.00		1.00	1.00		1.00	1.00		1.00	1.00		1.00
Parking Bus, Adj	1.00	1.00	1.00	1.00	1.00	1.00	1.00	1.00	1.00	1.00	1.00	1.00
Adj Sat Flow, veh/h/ln	1863	1863	1900	1863	1863	1863	1863	1863	1863	1863	1863	1900
Adj Flow Rate, veh/h	375	1048	65	361	720	692	76	1610	553	440	1180	109
Adj No. of Lanes	2	2	0	2	2	1	2	2	1	2	3	0
Peak Hour Factor	0.99	0.88	0.75	0.82	0.71	0.89	0.68	0.83	0.81	0.67	0.86	0.88
Percent Heavy Veh, %	2	2	2	2	2	2	2	2	2	2	2	2
Cap, veh/h	396	944	59	314	902	608	115	1296	724	443	2188	202
Arrive On Green	0.23	0.56	0.56	0.09	0.25	0.25	0.03	0.37	0.37	0.13	0.46	0.46
Sat Flow, veh/h	3442	3385	210	3442	3539	1583	3442	3539	1583	3442	4738	438
Grp Volume(v), veh/h	375	548	565	361	720	692	76	1610	553	440	844	445
Grp Sat Flow(s),veh/h/ln	1721	1770	1826	1721	1770	1583	1721	1770	1583	1721	1695	1786
Q Serve(g_s), s	17.2	44.6	44.6	14.6	30.4	34.1	3.5	58.6	32.0	20.4	28.6	28.6
Cycle Q Clear(g_c), s	17.2	44.6	44.6	14.6	30.4	34.1	3.5	58.6	32.0	20.4	28.6	28.6
Prop In Lane	1.00		0.11	1.00		1.00	1.00		1.00	1.00		0.25
Lane Grp Cap(c), veh/h	396	493	509	314	902	608	115	1296	724	443	1565	824
V/C Ratio(X)	0.95	1.11	1.11	1.15	0.80	1.14	0.66	1.24	0.76	0.99	0.54	0.54
Avail Cap(c_a), veh/h	396	493	509	314	903	608	159	1296	724	443	1565	824
HCM Platoon Ratio	2.00	2.00	2.00	1.00	1.00	1.00	1.00	1.00	1.00	1.00	1.00	1.00
Upstream Filter(I)	0.88	0.88	0.88	1.00	1.00	1.00	1.00	1.00	1.00	1.00	1.00	1.00
Uniform Delay (d), s/veh	61.1	35.4	35.4	72.7	55.7	31.1	76.4	50.7	36.2	69.6	30.9	30.9
Incr Delay (d2), s/veh	29.5	72.0	71.7	97.6	7.3	81.2	6.4	115.6	4.8	40.8	0.4	0.7
Initial Q Delay(d3),s/veh	0.0	0.0	0.0	0.0	0.0	0.0	0.0	0.0	0.0	0.0	0.0	0.0
%ile BackOfQ(50%),veh/ln	9.7	31.2	32.2	11.2	15.8	28.5	1.8	49.4	14.9	12.2	13.4	14.2
LnGrp Delay(d),s/veh	90.7	107.4	107.1	170.3	63.0	112.3	82.8	166.3	41.0	110.4	31.2	31.6
LnGrp LOS	F	F	F	F	E	F	F	F	D	F	C	C
Approach Vol, veh/h		1488			1773			2239			1729	
Approach Delay, s/veh		103.1			104.1			132.5			51.5	
Approach LOS		F			F			F			D	

Timer	1	2	3	4	5	6	7	8
Assigned Phs	1	2	3	4	5	6	7	8
Phs Duration (G+Y+Rc), s	20.0	50.0	10.7	79.3	23.8	46.2	26.0	64.0
Change Period (Y+Rc), s	5.4	5.4	5.4	5.4	5.4	5.4	5.4	5.4
Max Green Setting (Gmax), s	14.6	44.6	7.4	71.8	18.4	40.8	20.6	58.6
Max Q Clear Time (g_c+I1), s	16.6	46.6	5.5	30.6	19.2	36.1	22.4	60.6
Green Ext Time (p_c), s	0.0	0.0	0.0	13.7	0.0	3.3	0.0	0.0

Intersection Summary	
HCM 2010 Ctrl Delay	100.1
HCM 2010 LOS	F

Movement	EBL	EBT	EBR	WBL	WBT	WBR	NBL	NBT	NBR	SBL	SBT	SBR
Lane Configurations												
Traffic Volume (veh/h)	50	1950	50	180	1460	180	30	0	20	260	20	20
Future Volume (veh/h)	50	1950	50	180	1460	180	30	0	20	260	20	20
Number	5	2	12	1	6	16	3	8	18	7	4	14
Initial Q (Qb), veh	0	0	0	0	0	0	0	0	0	0	0	0
Ped-Bike Adj(A_pbT)	1.00		1.00	1.00		1.00	1.00		1.00	1.00		1.00
Parking Bus, Adj	1.00	1.00	1.00	1.00	1.00	1.00	1.00	1.00	1.00	1.00	1.00	1.00
Adj Sat Flow, veh/h/ln	1863	1863	1900	1863	1863	1900	1900	1863	1900	1863	1863	1863
Adj Flow Rate, veh/h	54	2120	54	196	1587	196	33	0	22	299	0	22
Adj No. of Lanes	1	3	0	1	3	0	0	1	0	2	0	1
Peak Hour Factor	0.92	0.92	0.92	0.92	0.92	0.92	0.92	0.92	0.92	0.92	0.92	0.92
Percent Heavy Veh, %	2	2	2	2	2	2	2	2	2	2	2	2
Cap, veh/h	237	3439	87	255	3190	393	41	0	28	356	0	159
Arrive On Green	0.06	1.00	1.00	0.05	0.70	0.70	0.04	0.00	0.04	0.10	0.00	0.10
Sat Flow, veh/h	1774	5100	130	1774	4588	565	1015	0	677	3548	0	1583
Grp Volume(v), veh/h	54	1408	766	196	1172	611	55	0	0	299	0	22
Grp Sat Flow(s),veh/h/ln	1774	1695	1840	1774	1695	1763	1692	0	0	1774	0	1583
Q Serve(g_s), s	1.5	0.0	0.0	5.5	25.7	25.8	5.2	0.0	0.0	13.2	0.0	2.0
Cycle Q Clear(g_c), s	1.5	0.0	0.0	5.5	25.7	25.8	5.2	0.0	0.0	13.2	0.0	2.0
Prop In Lane	1.00		0.07	1.00		0.32	0.60		0.40	1.00		1.00
Lane Grp Cap(c), veh/h	237	2286	1240	255	2358	1226	69	0	0	356	0	159
V/C Ratio(X)	0.23	0.62	0.62	0.77	0.50	0.50	0.80	0.00	0.00	0.84	0.00	0.14
Avail Cap(c_a), veh/h	266	2286	1240	440	2358	1226	72	0	0	559	0	249
HCM Platoon Ratio	2.00	2.00	2.00	1.00	1.00	1.00	1.00	1.00	1.00	1.00	1.00	1.00
Upstream Filter(I)	0.83	0.83	0.83	0.90	0.90	0.90	1.00	0.00	0.00	1.00	0.00	1.00
Uniform Delay (d), s/veh	9.0	0.0	0.0	9.7	11.3	11.4	76.1	0.0	0.0	70.7	0.0	65.7
Incr Delay (d2), s/veh	0.4	1.0	1.9	4.4	0.7	1.3	43.5	0.0	0.0	6.6	0.0	0.4
Initial Q Delay(d3),s/veh	0.0	0.0	0.0	0.0	0.0	0.0	0.0	0.0	0.0	0.0	0.0	0.0
%ile BackOfQ(50%),veh/ln	0.7	0.3	0.7	5.5	12.3	13.0	3.2	0.0	0.0	6.8	0.0	0.9
LnGrp Delay(d),s/veh	9.4	1.0	1.9	14.1	12.0	12.7	119.5	0.0	0.0	77.3	0.0	66.1
LnGrp LOS	A	A	A	B	B	B	F			E		E
Approach Vol, veh/h		2228			1979			55			321	
Approach Delay, s/veh		1.6			12.4			119.5			76.5	
Approach LOS		A			B			F			E	

Timer	1	2	3	4	5	6	7	8
Assigned Phs	1	2		4	5	6		8
Phs Duration (G+Y+Rc), s	13.3	113.3		21.4	9.9	116.7		11.9
Change Period (Y+Rc), s	5.4	5.4		5.4	5.4	5.4		5.4
Max Green Setting (Gmax), s	24.6	81.8		25.2	7.2	99.2		6.8
Max Q Clear Time (g_c+I1), s	7.5	2.0		15.2	3.5	27.8		7.2
Green Ext Time (p_c), s	0.5	69.2		0.8	0.0	62.7		0.0

Intersection Summary	
HCM 2010 Ctrl Delay	12.9
HCM 2010 LOS	B

Notes

User approved volume balancing among the lanes for turning movement.

Movement	EBL	EBT	EBR	WBL	WBT	WBR	NBL	NBT	NBR	SBL	SBT	SBR
Lane Configurations												
Traffic Volume (veh/h)	1313	1022	167	86	710	55	236	757	111	132	406	914
Future Volume (veh/h)	1313	1022	167	86	710	55	236	757	111	132	406	914
Number	5	2	12	1	6	16	3	8	18	7	4	14
Initial Q (Qb), veh	0	0	0	0	0	0	0	0	0	0	0	0
Ped-Bike Adj(A_pbT)	1.00		1.00	1.00		1.00	1.00		1.00	1.00		1.00
Parking Bus, Adj	1.00	1.00	1.00	1.00	1.00	1.00	1.00	1.00	1.00	1.00	1.00	1.00
Adj Sat Flow, veh/h/ln	1863	1863	1900	1863	1863	1863	1863	1863	1863	1863	1863	1863
Adj Flow Rate, veh/h	1563	1202	239	108	780	0	295	912	141	143	461	0
Adj No. of Lanes	2	2	0	1	2	1	1	2	1	1	2	1
Peak Hour Factor	0.84	0.85	0.70	0.80	0.91	0.78	0.80	0.83	0.79	0.92	0.88	0.83
Percent Heavy Veh, %	2	2	2	2	2	2	2	2	2	2	2	2
Cap, veh/h	1239	1470	290	160	721	323	307	876	495	140	736	313
Arrive On Green	0.60	0.83	0.83	0.06	0.20	0.00	0.10	0.25	0.25	0.05	0.20	0.00
Sat Flow, veh/h	3442	2948	582	1774	3539	1583	1774	3539	1583	1774	3725	1583
Grp Volume(v), veh/h	1563	718	723	108	780	0	295	912	141	143	461	0
Grp Sat Flow(s),veh/h/ln	1721	1770	1760	1774	1770	1583	1774	1770	1583	1774	1863	1583
Q Serve(g_s), s	57.6	33.6	35.0	8.5	32.6	0.0	16.6	39.6	10.8	8.6	18.1	0.0
Cycle Q Clear(g_c), s	57.6	33.6	35.0	8.5	32.6	0.0	16.6	39.6	10.8	8.6	18.1	0.0
Prop In Lane	1.00		0.33	1.00		1.00	1.00		1.00	1.00		1.00
Lane Grp Cap(c), veh/h	1239	883	878	160	721	323	307	876	495	140	736	313
V/C Ratio(X)	1.26	0.81	0.82	0.67	1.08	0.00	0.96	1.04	0.28	1.02	0.63	0.00
Avail Cap(c_a), veh/h	1239	883	878	163	721	323	307	876	495	140	736	313
HCM Platoon Ratio	1.67	1.67	1.67	1.00	1.00	1.00	1.00	1.00	1.00	1.00	1.00	1.00
Upstream Filter(I)	0.77	0.77	0.77	0.96	0.96	0.00	1.00	1.00	1.00	1.00	1.00	0.00
Uniform Delay (d), s/veh	31.9	9.5	9.6	58.0	63.7	0.0	52.1	60.2	41.5	55.6	58.8	0.0
Incr Delay (d2), s/veh	122.8	6.3	6.8	9.9	57.1	0.0	40.7	41.6	0.3	81.0	1.7	0.0
Initial Q Delay(d3),s/veh	0.0	0.0	0.0	0.0	0.0	0.0	0.0	0.0	0.0	0.2	0.0	0.0
%ile BackOfQ(50%),veh/ln	48.1	17.1	18.0	4.6	21.6	0.0	8.4	24.4	4.7	5.1	9.5	0.0
LnGrp Delay(d),s/veh	154.7	15.8	16.4	67.9	120.8	0.0	92.8	101.8	41.8	136.8	60.5	0.0
LnGrp LOS	F	B	B	E	F		F	F	D	F	E	
Approach Vol, veh/h		3004			888			1348			604	
Approach Delay, s/veh		88.2			114.4			93.6			78.6	
Approach LOS		F			F			F			E	

Timer	1	2	3	4	5	6	7	8
Assigned Phs	1	2	3	4	5	6	7	8
Phs Duration (G+Y+Rc), s	15.8	85.2	22.0	37.0	63.0	38.0	14.0	45.0
Change Period (Y+Rc), s	5.4	5.4	5.4	5.4	5.4	5.4	5.4	5.4
Max Green Setting (Gmax), s	10.6	79.6	16.6	31.6	57.6	32.6	8.6	39.6
Max Q Clear Time (g_c+I1), s	10.5	37.0	18.6	20.1	59.6	34.6	10.6	41.6
Green Ext Time (p_c), s	0.0	28.0	0.0	6.8	0.0	0.0	0.0	0.0

Intersection Summary	
HCM 2010 Ctrl Delay	92.4
HCM 2010 LOS	F

Notes

User approved volume balancing among the lanes for turning movement.

Movement	EBL	EBT	EBR	WBL	WBT	WBR	NBL	NBT	NBR	SBL	SBT	SBR
Lane Configurations												
Traffic Volume (veh/h)	0	1144	168	164	775	0	0	0	0	282	14	5
Future Volume (veh/h)	0	1144	168	164	775	0	0	0	0	282	14	5
Number	5	2	12	1	6	16				7	4	14
Initial Q (Qb), veh	0	0	0	0	0	0				0	0	0
Ped-Bike Adj(A_pbT)	1.00		1.00	1.00		1.00				1.00		1.00
Parking Bus, Adj	1.00	1.00	1.00	1.00	1.00	1.00				1.00	1.00	1.00
Adj Sat Flow, veh/h/ln	0	1863	1863	1863	1863	0				1863	1863	1863
Adj Flow Rate, veh/h	0	1230	0	173	901	0				338	0	0
Adj No. of Lanes	0	2	1	1	2	0				2	0	1
Peak Hour Factor	1.00	0.93	0.85	0.95	0.86	1.00				0.87	0.70	0.25
Percent Heavy Veh, %	0	2	2	2	2	0				2	2	2
Cap, veh/h	0	2652	1187	448	2902	0				400	0	178
Arrive On Green	0.00	1.00	0.00	0.04	0.82	0.00				0.11	0.00	0.00
Sat Flow, veh/h	0	3632	1583	1774	3632	0				3548	0	1583
Grp Volume(v), veh/h	0	1230	0	173	901	0				338	0	0
Grp Sat Flow(s),veh/h/ln	0	1770	1583	1774	1770	0				1774	0	1583
Q Serve(g_s), s	0.0	0.0	0.0	3.5	9.8	0.0				14.9	0.0	0.0
Cycle Q Clear(g_c), s	0.0	0.0	0.0	3.5	9.8	0.0				14.9	0.0	0.0
Prop In Lane	0.00		1.00	1.00		0.00				1.00		1.00
Lane Grp Cap(c), veh/h	0	2652	1187	448	2902	0				400	0	178
V/C Ratio(X)	0.00	0.46	0.00	0.39	0.31	0.00				0.85	0.00	0.00
Avail Cap(c_a), veh/h	0	2652	1187	623	2902	0				745	0	332
HCM Platoon Ratio	1.00	2.00	2.00	1.00	1.00	1.00				1.00	1.00	1.00
Upstream Filter(I)	0.00	0.50	0.00	0.95	0.95	0.00				1.00	0.00	0.00
Uniform Delay (d), s/veh	0.0	0.0	0.0	3.6	3.5	0.0				69.6	0.0	0.0
Incr Delay (d2), s/veh	0.0	0.3	0.0	0.5	0.3	0.0				5.0	0.0	0.0
Initial Q Delay(d3),s/veh	0.0	0.0	0.0	0.0	0.0	0.0				0.0	0.0	0.0
%ile BackOfQ(50%),veh/ln	0.0	0.1	0.0	1.7	4.9	0.0				7.6	0.0	0.0
LnGrp Delay(d),s/veh	0.0	0.3	0.0	4.1	3.7	0.0				74.6	0.0	0.0
LnGrp LOS		A		A	A					E		
Approach Vol, veh/h		1230			1074						338	
Approach Delay, s/veh		0.3			3.8						74.6	
Approach LOS		A			A						E	

Timer	1	2	3	4	5	6	7	8
Assigned Phs	1	2		4		6		
Phs Duration (G+Y+Rc), s	11.3	125.3		23.4		136.6		
Change Period (Y+Rc), s	5.4	5.4		5.4		5.4		
Max Green Setting (Gmax), s	21.6	88.6		33.6		115.6		
Max Q Clear Time (g_c+I1), s	5.5	2.0		16.9		11.8		
Green Ext Time (p_c), s	0.4	30.0		1.1		31.1		

Intersection Summary	
HCM 2010 Ctrl Delay	11.2
HCM 2010 LOS	B

Notes

User approved volume balancing among the lanes for turning movement.

Movement	EBL	EBT	EBR	WBL	WBT	WBR	NBL	NBT	NBR	SBL	SBT	SBR
Lane Configurations												
Traffic Volume (veh/h)	220	1195	0	0	812	540	154	70	170	0	0	0
Future Volume (veh/h)	220	1195	0	0	812	540	154	70	170	0	0	0
Number	5	2	12	1	6	16	3	8	18			
Initial Q (Qb), veh	0	0	0	0	0	0	0	0	0			
Ped-Bike Adj(A_pbT)	1.00		1.00	1.00		1.00	1.00		1.00			
Parking Bus, Adj	1.00	1.00	1.00	1.00	1.00	1.00	1.00	1.00	1.00			
Adj Sat Flow, veh/h/ln	1863	1863	0	0	1863	1863	1900	1863	1863			
Adj Flow Rate, veh/h	293	1358	0	0	855	0	223	76	0			
Adj No. of Lanes	1	2	0	0	2	1	0	2	1			
Peak Hour Factor	0.75	0.88	1.00	1.00	0.95	0.85	0.69	0.92	0.81			
Percent Heavy Veh, %	2	2	0	0	2	2	2	2	2			
Cap, veh/h	546	2793	0	0	2424	1084	254	254	227			
Arrive On Green	0.14	1.00	0.00	0.00	0.68	0.00	0.14	0.14	0.00			
Sat Flow, veh/h	1774	3632	0	0	3632	1583	1774	1770	1583			
Grp Volume(v), veh/h	293	1358	0	0	855	0	223	76	0			
Grp Sat Flow(s),veh/h/ln	1774	1770	0	0	1770	1583	1774	1770	1583			
Q Serve(g_s), s	8.5	0.0	0.0	0.0	16.1	0.0	19.7	6.1	0.0			
Cycle Q Clear(g_c), s	8.5	0.0	0.0	0.0	16.1	0.0	19.7	6.1	0.0			
Prop In Lane	1.00		0.00	0.00		1.00	1.00		1.00			
Lane Grp Cap(c), veh/h	546	2793	0	0	2424	1084	254	254	227			
V/C Ratio(X)	0.54	0.49	0.00	0.00	0.35	0.00	0.88	0.30	0.00			
Avail Cap(c_a), veh/h	760	2793	0	0	2424	1084	361	361	323			
HCM Platoon Ratio	2.00	2.00	1.00	1.00	1.00	1.00	1.00	1.00	1.00			
Upstream Filter(I)	0.84	0.84	0.00	0.00	1.00	0.00	1.00	1.00	0.00			
Uniform Delay (d), s/veh	6.5	0.0	0.0	0.0	10.5	0.0	67.1	61.3	0.0			
Incr Delay (d2), s/veh	0.7	0.5	0.0	0.0	0.4	0.0	15.6	0.7	0.0			
Initial Q Delay(d3),s/veh	0.0	0.0	0.0	0.0	0.0	0.0	0.0	0.0	0.0			
%ile BackOfQ(50%),veh/ln	4.0	0.2	0.0	0.0	8.0	0.0	10.8	3.1	0.0			
LnGrp Delay(d),s/veh	7.2	0.5	0.0	0.0	10.9	0.0	82.8	62.0	0.0			
LnGrp LOS	A	A			B		F	E				
Approach Vol, veh/h		1651			855			299				
Approach Delay, s/veh		1.7			10.9			77.5				
Approach LOS		A			B			E				

Timer	1	2	3	4	5	6	7	8
Assigned Phs		2			5	6		8
Phs Duration (G+Y+Rc), s		131.6			16.7	115.0		28.4
Change Period (Y+Rc), s		5.4			5.4	5.4		5.4
Max Green Setting (Gmax), s		116.6			30.6	80.6		32.6
Max Q Clear Time (g_c+I1), s		2.0			10.5	18.1		21.7
Green Ext Time (p_c), s		34.0			0.8	28.9		1.2

Intersection Summary	
HCM 2010 Ctrl Delay	12.6
HCM 2010 LOS	B

Notes

User approved ignoring U-Turning movement.

Movement	EBL	EBT	EBR	WBL	WBT	WBR	NBL	NBT	NBR	SBL	SBT	SBR
Lane Configurations												
Traffic Volume (veh/h)	123	1025	144	94	795	65	321	343	134	97	213	127
Future Volume (veh/h)	123	1025	144	94	795	65	321	343	134	97	213	127
Number	5	2	12	1	6	16	3	8	18	7	4	14
Initial Q (Qb), veh	0	0	0	0	0	0	0	0	0	0	0	0
Ped-Bike Adj(A_pbT)	1.00		1.00	1.00		1.00	1.00		1.00	1.00		1.00
Parking Bus, Adj	1.00	1.00	1.00	1.00	1.00	1.00	1.00	1.00	1.00	1.00	1.00	1.00
Adj Sat Flow, veh/h/ln	1863	1863	1900	1863	1863	1900	1863	1863	1863	1863	1863	1863
Adj Flow Rate, veh/h	186	1139	187	129	903	66	378	404	165	137	222	181
Adj No. of Lanes	1	2	0	1	2	0	1	1	1	1	1	1
Peak Hour Factor	0.66	0.90	0.77	0.73	0.88	0.98	0.85	0.85	0.81	0.71	0.96	0.70
Percent Heavy Veh, %	2	2	2	2	2	2	2	2	2	2	2	2
Cap, veh/h	321	1467	240	206	1550	113	408	507	512	211	263	333
Arrive On Green	0.07	0.48	0.48	0.05	0.46	0.46	0.19	0.27	0.27	0.06	0.14	0.14
Sat Flow, veh/h	1774	3046	498	1774	3345	244	1774	1863	1583	1774	1863	1583
Grp Volume(v), veh/h	186	660	666	129	478	491	378	404	165	137	222	181
Grp Sat Flow(s),veh/h/ln	1774	1770	1775	1774	1770	1820	1774	1863	1583	1774	1863	1583
Q Serve(g_s), s	8.8	49.3	49.8	6.1	31.7	31.7	28.4	32.3	12.6	9.6	18.6	16.3
Cycle Q Clear(g_c), s	8.8	49.3	49.8	6.1	31.7	31.7	28.4	32.3	12.6	9.6	18.6	16.3
Prop In Lane	1.00		0.28	1.00		0.13	1.00		1.00	1.00		1.00
Lane Grp Cap(c), veh/h	321	852	855	206	820	843	408	507	512	211	263	333
V/C Ratio(X)	0.58	0.77	0.78	0.63	0.58	0.58	0.93	0.80	0.32	0.65	0.84	0.54
Avail Cap(c_a), veh/h	433	852	855	259	820	843	420	545	544	211	289	355
HCM Platoon Ratio	1.00	1.00	1.00	1.00	1.00	1.00	1.00	1.00	1.00	1.00	1.00	1.00
Upstream Filter(I)	1.00	1.00	1.00	0.93	0.93	0.93	1.00	1.00	1.00	1.00	1.00	1.00
Uniform Delay (d), s/veh	24.2	34.3	34.4	30.3	31.5	31.5	45.4	54.1	40.9	57.0	67.0	56.3
Incr Delay (d2), s/veh	1.7	6.8	6.9	2.9	2.8	2.7	26.1	7.6	0.4	6.9	18.7	1.5
Initial Q Delay(d3),s/veh	0.0	0.0	0.0	0.0	0.0	0.0	0.0	0.0	0.0	0.0	0.0	0.0
%ile BackOfQ(50%),veh/ln	4.4	25.6	26.1	3.1	16.2	16.6	16.8	17.7	5.6	1.5	10.9	7.3
LnGrp Delay(d),s/veh	25.8	41.1	41.3	33.2	34.3	34.3	71.5	61.8	41.3	63.8	85.7	57.8
LnGrp LOS	C	D	D	C	C	C	E	E	D	E	F	E
Approach Vol, veh/h		1512			1098			947			540	
Approach Delay, s/veh		39.3			34.2			62.1			70.8	
Approach LOS		D			C			E			E	

Timer	1	2	3	4	5	6	7	8
Assigned Phs	1	2	3	4	5	6	7	8
Phs Duration (G+Y+Rc), s	13.6	82.5	36.0	28.0	16.5	79.6	15.0	49.0
Change Period (Y+Rc), s	5.4	5.4	5.4	5.4	5.4	5.4	5.4	5.4
Max Green Setting (Gmax), s	13.0	69.0	31.6	24.8	21.2	60.8	9.6	46.8
Max Q Clear Time (g_c+I1), s	8.1	51.8	30.4	20.6	10.8	33.7	11.6	34.3
Green Ext Time (p_c), s	0.1	12.5	0.2	2.0	0.3	17.3	0.0	4.2

Intersection Summary	
HCM 2010 Ctrl Delay	47.3
HCM 2010 LOS	D

Movement	EBL	EBT	WBT	WBR	SBL	SBR
Lane Configurations						
Traffic Volume (veh/h)	26	1269	893	72	122	56
Future Volume (veh/h)	26	1269	893	72	122	56
Number	5	2	6	16	7	14
Initial Q (Qb), veh	0	0	0	0	0	0
Ped-Bike Adj(A_pbT)	1.00			1.00	1.00	1.00
Parking Bus, Adj	1.00	1.00	1.00	1.00	1.00	1.00
Adj Sat Flow, veh/h/ln	1863	1863	1863	1900	1863	1863
Adj Flow Rate, veh/h	33	1511	992	129	156	75
Adj No. of Lanes	1	2	2	0	1	1
Peak Hour Factor	0.78	0.84	0.90	0.56	0.78	0.75
Percent Heavy Veh, %	2	2	2	2	2	2
Cap, veh/h	421	2936	2614	340	182	163
Arrive On Green	1.00	1.00	0.83	0.83	0.10	0.10
Sat Flow, veh/h	500	3632	3244	409	1774	1583
Grp Volume(v), veh/h	33	1511	557	564	156	75
Grp Sat Flow(s),veh/h/ln	500	1770	1770	1790	1774	1583
Q Serve(g_s), s	1.1	0.0	12.5	12.5	13.8	7.1
Cycle Q Clear(g_c), s	13.6	0.0	12.5	12.5	13.8	7.1
Prop In Lane	1.00			0.23	1.00	1.00
Lane Grp Cap(c), veh/h	421	2936	1468	1486	182	163
V/C Ratio(X)	0.08	0.51	0.38	0.38	0.86	0.46
Avail Cap(c_a), veh/h	421	2936	1468	1486	373	332
HCM Platoon Ratio	2.00	2.00	1.00	1.00	1.00	1.00
Upstream Filter(I)	0.57	0.57	0.93	0.93	1.00	1.00
Uniform Delay (d), s/veh	0.6	0.0	3.4	3.4	70.6	67.6
Incr Delay (d2), s/veh	0.2	0.4	0.2	0.1	10.8	2.0
Initial Q Delay(d3),s/veh	0.0	0.0	0.0	0.0	0.0	0.0
%ile BackOfQ(50%),veh/ln	0.2	0.2	6.1	6.2	7.4	3.2
LnGrp Delay(d),s/veh	0.8	0.4	3.5	3.5	81.4	69.6
LnGrp LOS	A	A	A	A	F	E
Approach Vol, veh/h		1544	1121		231	
Approach Delay, s/veh		0.4	3.5		77.6	
Approach LOS		A	A		E	

Timer	1	2	3	4	5	6	7	8
Assigned Phs		2		4		6		
Phs Duration (G+Y+Rc), s		138.2		21.8		138.2		
Change Period (Y+Rc), s		5.4		5.4		5.4		
Max Green Setting (Gmax), s		115.6		33.6		115.6		
Max Q Clear Time (g_c+I1), s		15.6		15.8		14.5		
Green Ext Time (p_c), s		46.2		0.6		46.4		

Intersection Summary	
HCM 2010 Ctrl Delay	7.8
HCM 2010 LOS	A

Movement	EBL	EBT	EBR	WBL	WBT	WBR	NBL	NBT	NBR	SBL	SBT	SBR
Lane Configurations												
Traffic Volume (veh/h)	516	1017	41	8	619	68	8	4	6	52	3	70
Future Volume (veh/h)	516	1017	41	8	619	68	8	4	6	52	3	70
Number	5	2	12	1	6	16	3	8	18	7	4	14
Initial Q (Qb), veh	0	0	0	0	0	0	0	0	0	0	0	0
Ped-Bike Adj(A_pbT)	1.00		1.00	1.00		1.00	1.00		1.00	1.00		1.00
Parking Bus, Adj	1.00	1.00	1.00	1.00	1.00	1.00	1.00	1.00	1.00	1.00	1.00	1.00
Adj Sat Flow, veh/h/ln	1863	1863	1900	1863	1863	1900	1900	1863	1863	1900	1863	1863
Adj Flow Rate, veh/h	567	1059	64	12	673	93	12	12	8	72	8	88
Adj No. of Lanes	1	2	0	1	2	0	0	1	1	0	1	1
Peak Hour Factor	0.91	0.96	0.64	0.67	0.92	0.73	0.67	0.33	0.75	0.72	0.38	0.80
Percent Heavy Veh, %	2	2	2	2	2	2	2	2	2	2	2	2
Cap, veh/h	678	2921	176	409	2276	314	84	73	113	113	10	113
Arrive On Green	0.10	0.86	0.86	0.73	0.73	0.73	0.07	0.07	0.07	0.07	0.07	0.07
Sat Flow, veh/h	1774	3391	205	499	3125	431	711	1032	1583	980	145	1583
Grp Volume(v), veh/h	567	552	571	12	381	385	24	0	8	80	0	88
Grp Sat Flow(s),veh/h/ln	1774	1770	1827	499	1770	1787	1744	0	1583	1125	0	1583
Q Serve(g_s), s	12.0	10.1	10.1	1.1	11.9	11.9	0.0	0.0	0.8	8.1	0.0	8.7
Cycle Q Clear(g_c), s	12.0	10.1	10.1	1.1	11.9	11.9	1.9	0.0	0.8	8.1	0.0	8.7
Prop In Lane	1.00		0.11	1.00		0.24	0.50		1.00	0.90		1.00
Lane Grp Cap(c), veh/h	678	1524	1573	409	1289	1301	158	0	113	0	0	113
V/C Ratio(X)	0.84	0.36	0.36	0.03	0.30	0.30	0.15	0.00	0.07	0.00	0.00	0.78
Avail Cap(c_a), veh/h	1240	1524	1573	409	1289	1301	176	0	131	0	0	234
HCM Platoon Ratio	1.00	1.00	1.00	1.00	1.00	1.00	1.00	1.00	1.00	1.00	1.00	1.00
Upstream Filter(I)	0.81	0.81	0.81	1.00	1.00	1.00	1.00	0.00	1.00	1.00	0.00	1.00
Uniform Delay (d), s/veh	6.2	2.2	2.2	6.1	7.5	7.5	69.9	0.0	69.4	0.0	0.0	73.1
Incr Delay (d2), s/veh	2.3	0.5	0.5	0.1	0.6	0.6	0.4	0.0	0.3	0.0	0.0	11.1
Initial Q Delay(d3),s/veh	0.0	0.0	0.0	0.0	0.0	0.0	0.0	0.0	0.0	0.0	0.0	0.0
%ile BackOfQ(50%),veh/ln	11.3	5.0	5.1	0.2	6.0	6.1	1.0	0.0	0.3	0.0	0.0	4.2
LnGrp Delay(d),s/veh	8.5	2.8	2.8	6.2	8.1	8.1	70.4	0.0	69.6	0.0	0.0	84.1
LnGrp LOS	A	A	A	A	A	A	E		E			F
Approach Vol, veh/h		1690			778			32			168	
Approach Delay, s/veh		4.7			8.1			70.2			44.1	
Approach LOS		A			A			E			D	

Timer	1	2	3	4	5	6	7	8
Assigned Phs		2		4	5	6		8
Phs Duration (G+Y+Rc), s		143.2		16.8	21.3	121.9		16.8
Change Period (Y+Rc), s		5.4		5.4	5.4	5.4		5.4
Max Green Setting (Gmax), s		125.6		23.6	66.6	53.6		13.2
Max Q Clear Time (g_c+I1), s		12.1		10.7	14.0	13.9		3.9
Green Ext Time (p_c), s		19.3		0.6	1.9	16.2		0.5

Intersection Summary	
HCM 2010 Ctrl Delay	9.0
HCM 2010 LOS	A

Movement	EBL	EBT	EBR	WBL	WBT	WBR	NBL	NBT	NBR	SBL	SBT	SBR
Lane Configurations												
Traffic Volume (veh/h)	594	304	162	164	228	31	366	2358	107	85	1156	233
Future Volume (veh/h)	594	304	162	164	228	31	366	2358	107	85	1156	233
Number	5	2	12	1	6	16	3	8	18	7	4	14
Initial Q (Qb), veh	0	0	0	0	0	0	0	0	0	0	0	0
Ped-Bike Adj(A_pbT)	1.00		1.00	1.00		1.00	1.00		1.00	1.00		1.00
Parking Bus, Adj	1.00	1.00	1.00	1.00	1.00	1.00	1.00	1.00	1.00	1.00	1.00	1.00
Adj Sat Flow, veh/h/ln	1863	1863	1863	1863	1863	1900	1863	1863	1900	1863	1863	1863
Adj Flow Rate, veh/h	683	330	0	178	313	55	416	2563	141	96	1257	277
Adj No. of Lanes	2	1	1	1	2	0	2	3	0	1	3	1
Peak Hour Factor	0.87	0.92	0.71	0.79	0.84	0.56	0.88	0.92	0.76	0.89	0.92	0.84
Percent Heavy Veh, %	2	2	2	2	2	2	2	2	2	2	2	2
Cap, veh/h	776	407	346	195	340	59	470	2456	133	114	2033	633
Arrive On Green	0.22	0.22	0.00	0.11	0.11	0.11	0.14	0.50	0.50	0.04	0.40	0.40
Sat Flow, veh/h	3548	1863	1583	1774	3094	537	3442	4937	268	1774	5085	1583
Grp Volume(v), veh/h	683	330	0	178	187	181	416	1750	954	96	1257	277
Grp Sat Flow(s),veh/h/ln	1774	1863	1583	1774	1863	1768	1721	1695	1815	1774	1695	1583
Q Serve(g_s), s	29.8	26.9	0.0	15.9	15.9	16.2	19.0	79.6	79.6	5.1	31.5	20.4
Cycle Q Clear(g_c), s	29.8	26.9	0.0	15.9	15.9	16.2	19.0	79.6	79.6	5.1	31.5	20.4
Prop In Lane	1.00		1.00	1.00		0.30	1.00		0.15	1.00		1.00
Lane Grp Cap(c), veh/h	776	407	346	195	205	194	470	1687	903	114	2033	633
V/C Ratio(X)	0.88	0.81	0.00	0.91	0.91	0.93	0.89	1.04	1.06	0.84	0.62	0.44
Avail Cap(c_a), veh/h	776	407	346	195	205	194	585	1687	903	114	2033	633
HCM Platoon Ratio	1.00	1.00	1.00	1.00	1.00	1.00	1.00	1.00	1.00	1.00	1.00	1.00
Upstream Filter(I)	1.00	1.00	0.00	1.00	1.00	1.00	1.00	1.00	1.00	1.00	1.00	1.00
Uniform Delay (d), s/veh	60.5	59.3	0.0	70.4	70.4	70.6	67.9	40.2	40.2	39.4	38.3	34.9
Incr Delay (d2), s/veh	13.6	15.9	0.0	44.9	43.5	48.6	13.0	32.2	46.1	40.9	0.6	0.5
Initial Q Delay(d3),s/veh	0.0	0.0	0.0	0.0	0.0	0.0	0.0	0.0	0.0	0.0	0.0	0.0
%ile BackOfQ(50%),veh/ln	16.1	15.6	0.0	10.2	10.7	10.6	9.9	44.8	51.5	3.8	14.9	9.0
LnGrp Delay(d),s/veh	74.1	75.2	0.0	115.3	114.0	119.2	80.8	72.4	86.3	80.3	38.9	35.4
LnGrp LOS	E	E		F	F	F	F	F	F	F	D	D
Approach Vol, veh/h		1013			546			3120			1630	
Approach Delay, s/veh		74.4			116.1			77.8			40.7	
Approach LOS		E			F			E			D	

Timer	1	2	3	4	5	6	7	8
Assigned Phs		2	3	4		6	7	8
Phs Duration (G+Y+Rc), s		40.4	27.2	69.4		23.0	11.6	85.0
Change Period (Y+Rc), s		5.4	5.4	5.4		5.4	5.4	5.4
Max Green Setting (Gmax), s		35.0	27.2	58.6		17.6	6.2	79.6
Max Q Clear Time (g_c+I1), s		31.8	21.0	33.5		18.2	7.1	81.6
Green Ext Time (p_c), s		1.5	0.8	24.5		0.0	0.0	0.0

Intersection Summary	
HCM 2010 Ctrl Delay	71.0
HCM 2010 LOS	E

Notes

User approved volume balancing among the lanes for turning movement.

Movement	EBL	EBT	EBR	WBL	WBT	WBR	NBL	NBT	NBR	SBL	SBT	SBR
Lane Configurations												
Traffic Volume (veh/h)	132	468	28	10	363	59	38	104	11	38	44	32
Future Volume (veh/h)	132	468	28	10	363	59	38	104	11	38	44	32
Number	5	2	12	1	6	16	3	8	18	7	4	14
Initial Q (Qb), veh	0	0	0	0	0	0	0	0	0	0	0	0
Ped-Bike Adj(A_pbT)	1.00		1.00	1.00		1.00	1.00		1.00	1.00		1.00
Parking Bus, Adj	1.00	1.00	1.00	1.00	1.00	1.00	1.00	1.00	1.00	1.00	1.00	1.00
Adj Sat Flow, veh/h/ln	1863	1863	1900	1863	1863	1900	1863	1863	1900	1863	1863	1900
Adj Flow Rate, veh/h	171	585	33	12	412	80	56	137	20	44	60	48
Adj No. of Lanes	1	1	0	1	1	0	1	1	0	1	1	0
Peak Hour Factor	0.77	0.80	0.84	0.83	0.88	0.74	0.68	0.76	0.55	0.86	0.73	0.67
Percent Heavy Veh, %	2	2	2	2	2	2	2	2	2	2	2	2
Cap, veh/h	414	801	45	294	588	114	288	204	30	251	116	93
Arrive On Green	0.09	0.46	0.46	0.02	0.39	0.39	0.05	0.13	0.13	0.04	0.12	0.12
Sat Flow, veh/h	1774	1747	99	1774	1516	294	1774	1590	232	1774	960	768
Grp Volume(v), veh/h	171	0	618	12	0	492	56	0	157	44	0	108
Grp Sat Flow(s),veh/h/ln	1774	0	1845	1774	0	1811	1774	0	1822	1774	0	1727
Q Serve(g_s), s	3.3	0.0	16.6	0.2	0.0	13.9	1.6	0.0	5.0	1.3	0.0	3.6
Cycle Q Clear(g_c), s	3.3	0.0	16.6	0.2	0.0	13.9	1.6	0.0	5.0	1.3	0.0	3.6
Prop In Lane	1.00		0.05	1.00		0.16	1.00		0.13	1.00		0.44
Lane Grp Cap(c), veh/h	414	0	846	294	0	703	288	0	234	251	0	209
V/C Ratio(X)	0.41	0.00	0.73	0.04	0.00	0.70	0.19	0.00	0.67	0.17	0.00	0.52
Avail Cap(c_a), veh/h	560	0	1316	419	0	1143	362	0	437	327	0	403
HCM Platoon Ratio	1.00	1.00	1.00	1.00	1.00	1.00	1.00	1.00	1.00	1.00	1.00	1.00
Upstream Filter(I)	1.00	0.00	1.00	1.00	0.00	1.00	1.00	0.00	1.00	1.00	0.00	1.00
Uniform Delay (d), s/veh	11.0	0.0	13.4	12.2	0.0	15.6	21.7	0.0	25.3	22.0	0.0	25.1
Incr Delay (d2), s/veh	0.7	0.0	1.2	0.1	0.0	1.3	0.3	0.0	3.3	0.3	0.0	2.0
Initial Q Delay(d3),s/veh	0.0	0.0	0.0	0.0	0.0	0.0	0.0	0.0	0.0	0.0	0.0	0.0
%ile BackOfQ(50%),veh/ln	1.6	0.0	8.7	0.1	0.0	7.1	0.8	0.0	2.7	0.6	0.0	1.8
LnGrp Delay(d),s/veh	11.7	0.0	14.7	12.2	0.0	16.9	22.0	0.0	28.6	22.3	0.0	27.0
LnGrp LOS	B		B	B		B	C		C	C		C
Approach Vol, veh/h		789			504			213			152	
Approach Delay, s/veh		14.0			16.8			26.9			25.6	
Approach LOS		B			B			C			C	

Timer	1	2	3	4	5	6	7	8
Assigned Phs	1	2	3	4	5	6	7	8
Phs Duration (G+Y+Rc), s	6.3	33.3	8.5	12.8	10.6	29.0	8.0	13.2
Change Period (Y+Rc), s	5.4	5.4	5.4	5.4	5.4	5.4	5.4	5.4
Max Green Setting (Gmax), s	5.2	43.4	5.6	14.2	10.2	38.4	5.2	14.6
Max Q Clear Time (g_c+I1), s	2.2	18.6	3.6	5.6	5.3	15.9	3.3	7.0
Green Ext Time (p_c), s	0.0	8.0	0.0	0.9	0.2	7.7	0.0	0.8

Intersection Summary	
HCM 2010 Ctrl Delay	17.6
HCM 2010 LOS	B

Movement	EBL	EBT	EBR	WBL	WBT	WBR	NBL	NBT	NBR	SBL	SBT	SBR
Lane Configurations												
Traffic Volume (veh/h)	126	362	57	54	206	19	85	443	72	35	231	46
Future Volume (veh/h)	126	362	57	54	206	19	85	443	72	35	231	46
Number	5	2	12	1	6	16	3	8	18	7	4	14
Initial Q (Qb), veh	0	0	0	0	0	0	0	0	0	0	0	0
Ped-Bike Adj(A_pbT)	1.00		1.00	1.00		1.00	1.00		1.00	1.00		1.00
Parking Bus, Adj	1.00	1.00	1.00	1.00	1.00	1.00	1.00	1.00	1.00	1.00	1.00	1.00
Adj Sat Flow, veh/h/ln	1863	1863	1900	1863	1863	1900	1863	1863	1900	1863	1863	1900
Adj Flow Rate, veh/h	183	398	90	72	219	42	157	482	114	44	260	78
Adj No. of Lanes	1	1	0	1	1	0	1	1	0	1	1	0
Peak Hour Factor	0.69	0.91	0.63	0.75	0.94	0.45	0.54	0.92	0.63	0.80	0.89	0.59
Percent Heavy Veh, %	2	2	2	2	2	2	2	2	2	2	2	2
Cap, veh/h	399	444	100	210	385	74	387	517	122	183	430	129
Arrive On Green	0.10	0.30	0.30	0.05	0.25	0.25	0.08	0.36	0.36	0.04	0.31	0.31
Sat Flow, veh/h	1774	1471	333	1774	1520	291	1774	1457	345	1774	1377	413
Grp Volume(v), veh/h	183	0	488	72	0	261	157	0	596	44	0	338
Grp Sat Flow(s),veh/h/ln	1774	0	1804	1774	0	1811	1774	0	1802	1774	0	1790
Q Serve(g_s), s	6.2	0.0	21.8	2.5	0.0	10.6	4.9	0.0	26.8	1.4	0.0	13.5
Cycle Q Clear(g_c), s	6.2	0.0	21.8	2.5	0.0	10.6	4.9	0.0	26.8	1.4	0.0	13.5
Prop In Lane	1.00		0.18	1.00		0.16	1.00		0.19	1.00		0.23
Lane Grp Cap(c), veh/h	399	0	544	210	0	459	387	0	640	183	0	559
V/C Ratio(X)	0.46	0.00	0.90	0.34	0.00	0.57	0.41	0.00	0.93	0.24	0.00	0.60
Avail Cap(c_a), veh/h	409	0	590	234	0	519	421	0	655	223	0	581
HCM Platoon Ratio	1.00	1.00	1.00	1.00	1.00	1.00	1.00	1.00	1.00	1.00	1.00	1.00
Upstream Filter(I)	1.00	0.00	1.00	1.00	0.00	1.00	1.00	0.00	1.00	1.00	0.00	1.00
Uniform Delay (d), s/veh	20.2	0.0	28.1	23.4	0.0	27.4	18.2	0.0	26.1	21.6	0.0	24.5
Incr Delay (d2), s/veh	0.8	0.0	15.7	1.0	0.0	1.1	0.7	0.0	20.0	0.7	0.0	1.7
Initial Q Delay(d3),s/veh	0.0	0.0	0.0	0.0	0.0	0.0	0.0	0.0	0.0	0.0	0.0	0.0
%ile BackOfQ(50%),veh/ln	3.1	0.0	13.2	1.3	0.0	5.4	2.5	0.0	16.8	0.7	0.0	6.9
LnGrp Delay(d),s/veh	21.1	0.0	43.8	24.4	0.0	28.5	18.9	0.0	46.1	22.3	0.0	26.2
LnGrp LOS	C		D	C		C	B		D	C		C
Approach Vol, veh/h		671			333			753			382	
Approach Delay, s/veh		37.6			27.6			40.4			25.8	
Approach LOS		D			C			D			C	

Timer	1	2	3	4	5	6	7	8
Assigned Phs	1	2	3	4	5	6	7	8
Phs Duration (G+Y+Rc), s	9.5	30.8	12.2	31.7	13.5	26.7	8.6	35.3
Change Period (Y+Rc), s	5.4	5.4	5.4	5.4	5.4	5.4	5.4	5.4
Max Green Setting (Gmax), s	5.2	27.5	8.4	27.3	8.6	24.1	5.1	30.6
Max Q Clear Time (g_c+I1), s	4.5	23.8	6.9	15.5	8.2	12.6	3.4	28.8
Green Ext Time (p_c), s	0.0	1.6	0.1	4.9	0.0	3.6	0.0	1.0

Intersection Summary	
HCM 2010 Ctrl Delay	34.9
HCM 2010 LOS	C

Movement	EBL	EBT	EBR	WBL	WBT	WBR	NBL	NBT	NBR	SBL	SBT	SBR
Lane Configurations												
Traffic Volume (veh/h)	391	185	13	1	134	156	29	59	8	79	28	62
Future Volume (veh/h)	391	185	13	1	134	156	29	59	8	79	28	62
Number	5	2	12	1	6	16	3	8	18	7	4	14
Initial Q (Qb), veh	0	0	0	0	0	0	0	0	0	0	0	0
Ped-Bike Adj(A_pbT)	1.00		1.00	1.00		1.00	1.00		1.00	1.00		1.00
Parking Bus, Adj	1.00	1.00	1.00	1.00	1.00	1.00	1.00	1.00	1.00	1.00	1.00	1.00
Adj Sat Flow, veh/h/ln	1863	1863	1900	1863	1863	1900	1863	1863	1900	1863	1863	1863
Adj Flow Rate, veh/h	483	240	28	4	144	205	44	72	16	90	44	95
Adj No. of Lanes	1	1	0	1	1	0	1	1	0	1	1	1
Peak Hour Factor	0.81	0.77	0.46	0.25	0.93	0.76	0.66	0.82	0.50	0.88	0.64	0.65
Percent Heavy Veh, %	2	2	2	2	2	2	2	2	2	2	2	2
Cap, veh/h	704	1066	124	782	453	646	298	232	51	276	292	248
Arrive On Green	0.65	0.65	0.65	0.65	0.65	0.65	0.16	0.16	0.16	0.16	0.16	0.16
Sat Flow, veh/h	1028	1638	191	1107	696	991	1245	1477	328	1304	1863	1583
Grp Volume(v), veh/h	483	0	268	4	0	349	44	0	88	90	44	95
Grp Sat Flow(s),veh/h/ln	1028	0	1829	1107	0	1688	1245	0	1805	1304	1863	1583
Q Serve(g_s), s	21.9	0.0	3.4	0.1	0.0	5.1	1.8	0.0	2.4	3.7	1.1	3.0
Cycle Q Clear(g_c), s	27.0	0.0	3.4	3.4	0.0	5.1	2.9	0.0	2.4	6.1	1.1	3.0
Prop In Lane	1.00		0.10	1.00		0.59	1.00		0.18	1.00		1.00
Lane Grp Cap(c), veh/h	704	0	1191	782	0	1099	298	0	283	276	292	248
V/C Ratio(X)	0.69	0.00	0.23	0.01	0.00	0.32	0.15	0.00	0.31	0.33	0.15	0.38
Avail Cap(c_a), veh/h	1234	0	2134	1353	0	1969	404	0	437	387	451	383
HCM Platoon Ratio	1.00	1.00	1.00	1.00	1.00	1.00	1.00	1.00	1.00	1.00	1.00	1.00
Upstream Filter(I)	1.00	0.00	1.00	1.00	0.00	1.00	1.00	0.00	1.00	1.00	1.00	1.00
Uniform Delay (d), s/veh	10.3	0.0	4.0	4.7	0.0	4.3	21.7	0.0	21.0	23.7	20.5	21.3
Incr Delay (d2), s/veh	1.2	0.0	0.1	0.0	0.0	0.2	0.2	0.0	0.6	0.7	0.2	1.0
Initial Q Delay(d3),s/veh	0.0	0.0	0.0	0.0	0.0	0.0	0.0	0.0	0.0	0.0	0.0	0.0
%ile BackOfQ(50%),veh/ln	6.3	0.0	1.7	0.0	0.0	2.4	0.6	0.0	1.2	1.4	0.6	1.4
LnGrp Delay(d),s/veh	11.5	0.0	4.1	4.7	0.0	4.5	22.0	0.0	21.6	24.4	20.7	22.2
LnGrp LOS	B		A	A		A	C		C	C	C	C
Approach Vol, veh/h		751			353			132			229	
Approach Delay, s/veh		8.8			4.5			21.7			22.8	
Approach LOS		A			A			C			C	

Timer	1	2	3	4	5	6	7	8
Assigned Phs		2		4		6		8
Phs Duration (G+Y+Rc), s		42.0		14.2		42.0		14.2
Change Period (Y+Rc), s		5.4		5.4		5.4		5.4
Max Green Setting (Gmax), s		65.6		13.6		65.6		13.6
Max Q Clear Time (g_c+I1), s		29.0		8.1		7.1		4.9
Green Ext Time (p_c), s		7.6		0.7		7.9		1.0

Intersection Summary	
HCM 2010 Ctrl Delay	11.1
HCM 2010 LOS	B

Movement	EBL	EBT	EBR	WBL	WBT	WBR	NBL	NBT	NBR	SBL	SBT	SBR
Lane Configurations												
Traffic Volume (veh/h)	86	71	117	57	55	11	129	833	80	16	311	40
Future Volume (veh/h)	86	71	117	57	55	11	129	833	80	16	311	40
Number	5	2	12	1	6	16	3	8	18	7	4	14
Initial Q (Qb), veh	0	0	0	0	0	0	0	0	0	0	0	0
Ped-Bike Adj(A_pbT)	1.00		1.00	1.00		1.00	1.00		1.00	1.00		1.00
Parking Bus, Adj	1.00	1.00	1.00	1.00	1.00	1.00	1.00	1.00	1.00	1.00	1.00	1.00
Adj Sat Flow, veh/h/ln	1863	1863	1900	1863	1863	1900	1863	1863	1900	1863	1863	1900
Adj Flow Rate, veh/h	126	113	167	102	100	20	150	905	123	30	349	60
Adj No. of Lanes	1	1	0	1	1	0	1	1	0	1	1	0
Peak Hour Factor	0.68	0.63	0.70	0.56	0.55	0.55	0.86	0.92	0.65	0.54	0.89	0.67
Percent Heavy Veh, %	2	2	2	2	2	2	2	2	2	2	2	2
Cap, veh/h	284	110	162	155	243	49	552	901	123	115	825	142
Arrive On Green	0.05	0.16	0.16	0.05	0.16	0.16	0.06	0.56	0.56	0.03	0.53	0.53
Sat Flow, veh/h	1774	680	1005	1774	1508	302	1774	1606	218	1774	1549	266
Grp Volume(v), veh/h	126	0	280	102	0	120	150	0	1028	30	0	409
Grp Sat Flow(s),veh/h/ln	1774	0	1685	1774	0	1810	1774	0	1824	1774	0	1816
Q Serve(g_s), s	5.4	0.0	17.4	5.2	0.0	6.4	4.1	0.0	60.6	0.8	0.0	14.7
Cycle Q Clear(g_c), s	5.4	0.0	17.4	5.2	0.0	6.4	4.1	0.0	60.6	0.8	0.0	14.7
Prop In Lane	1.00		0.60	1.00		0.17	1.00		0.12	1.00		0.15
Lane Grp Cap(c), veh/h	284	0	272	155	0	292	552	0	1024	115	0	967
V/C Ratio(X)	0.44	0.00	1.03	0.66	0.00	0.41	0.27	0.00	1.00	0.26	0.00	0.42
Avail Cap(c_a), veh/h	284	0	272	155	0	292	568	0	1024	149	0	986
HCM Platoon Ratio	1.00	1.00	1.00	1.00	1.00	1.00	1.00	1.00	1.00	1.00	1.00	1.00
Upstream Filter(I)	1.00	0.00	1.00	1.00	0.00	1.00	1.00	0.00	1.00	1.00	0.00	1.00
Uniform Delay (d), s/veh	37.4	0.0	45.3	37.0	0.0	40.7	11.2	0.0	23.7	25.9	0.0	15.2
Incr Delay (d2), s/veh	1.1	0.0	62.8	9.6	0.0	0.9	0.3	0.0	29.1	1.2	0.0	0.3
Initial Q Delay(d3),s/veh	0.0	0.0	0.0	0.0	0.0	0.0	0.0	0.0	0.0	0.0	0.0	0.0
%ile BackOfQ(50%),veh/ln	0.9	0.0	12.8	2.9	0.0	3.3	2.0	0.0	38.4	0.5	0.0	7.4
LnGrp Delay(d),s/veh	38.5	0.0	108.1	46.6	0.0	41.6	11.4	0.0	52.8	27.1	0.0	15.5
LnGrp LOS	D		F	D		D	B		F	C		B
Approach Vol, veh/h		406			222			1178			439	
Approach Delay, s/veh		86.5			43.9			47.5			16.3	
Approach LOS		F			D			D			B	

Timer	1	2	3	4	5	6	7	8
Assigned Phs	1	2	3	4	5	6	7	8
Phs Duration (G+Y+Rc), s	10.8	22.8	11.5	62.9	10.8	22.8	8.4	66.0
Change Period (Y+Rc), s	5.4	5.4	5.4	5.4	5.4	5.4	5.4	5.4
Max Green Setting (Gmax), s	5.4	17.4	7.0	58.6	5.4	17.4	5.0	60.6
Max Q Clear Time (g_c+I1), s	7.2	19.4	6.1	16.7	7.4	8.4	2.8	62.6
Green Ext Time (p_c), s	0.0	0.0	0.0	16.6	0.0	1.6	0.0	0.0

Intersection Summary	
HCM 2010 Ctrl Delay	48.1
HCM 2010 LOS	D

Movement	EBL	EBT	EBR	WBL	WBT	WBR	NBL	NBT	NBR	SBL	SBT	SBR
Lane Configurations												
Traffic Volume (veh/h)	100	1470	70	20	700	50	0	0	100	40	20	40
Future Volume (veh/h)	100	1470	70	20	700	50	0	0	100	40	20	40
Number	5	2	12	1	6	16	3	8	18	7	4	14
Initial Q (Qb), veh	0	0	0	0	0	0	0	0	0	0	0	0
Ped-Bike Adj(A_pbT)	1.00		1.00	1.00		1.00	1.00		1.00	1.00		1.00
Parking Bus, Adj	1.00	1.00	1.00	1.00	1.00	1.00	1.00	1.00	1.00	1.00	1.00	1.00
Adj Sat Flow, veh/h/ln	1863	1863	1900	1863	1863	1900	0	1863	1900	1900	1863	1863
Adj Flow Rate, veh/h	109	1598	76	22	761	54	0	0	109	43	22	43
Adj No. of Lanes	1	2	0	1	2	0	0	1	0	0	1	1
Peak Hour Factor	0.92	0.92	0.92	0.92	0.92	0.92	0.92	0.92	0.92	0.92	0.92	0.92
Percent Heavy Veh, %	2	2	2	2	2	2	0	2	2	2	2	2
Cap, veh/h	552	2804	133	266	2515	178	0	0	186	87	37	186
Arrive On Green	0.06	1.00	1.00	0.75	0.75	0.75	0.00	0.00	0.12	0.12	0.12	0.12
Sat Flow, veh/h	1774	3441	163	295	3353	238	0	0	1583	421	317	1583
Grp Volume(v), veh/h	109	819	855	22	402	413	0	0	109	65	0	43
Grp Sat Flow(s),veh/h/ln	1774	1770	1834	295	1770	1821	0	0	1583	738	0	1583
Q Serve(g_s), s	2.2	0.0	0.0	3.2	11.7	11.7	0.0	0.0	10.4	5.8	0.0	3.9
Cycle Q Clear(g_c), s	2.2	0.0	0.0	3.2	11.7	11.7	0.0	0.0	10.4	16.3	0.0	3.9
Prop In Lane	1.00		0.09	1.00		0.13	0.00		1.00	0.66		1.00
Lane Grp Cap(c), veh/h	552	1442	1495	266	1328	1366	0	0	186	124	0	186
V/C Ratio(X)	0.20	0.57	0.57	0.08	0.30	0.30	0.00	0.00	0.59	0.52	0.00	0.23
Avail Cap(c_a), veh/h	659	1442	1495	266	1328	1366	0	0	243	176	0	243
HCM Platoon Ratio	2.00	2.00	2.00	1.00	1.00	1.00	1.00	1.00	1.00	1.00	1.00	1.00
Upstream Filter(I)	0.67	0.67	0.67	0.92	0.92	0.92	0.00	0.00	1.00	1.00	0.00	1.00
Uniform Delay (d), s/veh	4.2	0.0	0.0	5.4	6.5	6.5	0.0	0.0	66.9	72.3	0.0	64.0
Incr Delay (d2), s/veh	0.1	1.1	1.1	0.6	0.5	0.5	0.0	0.0	2.9	3.4	0.0	0.6
Initial Q Delay(d3),s/veh	0.0	0.0	0.0	0.0	0.0	0.0	0.0	0.0	0.0	0.0	0.0	0.0
%ile BackOfQ(50%),veh/ln	1.1	0.4	0.4	0.3	5.9	6.1	0.0	0.0	4.7	3.0	0.0	3.6
LnGrp Delay(d),s/veh	4.3	1.1	1.1	6.0	7.0	7.0	0.0	0.0	69.8	75.6	0.0	64.7
LnGrp LOS	A	A	A	A	A	A			E	E		E
Approach Vol, veh/h		1783			837			109			108	
Approach Delay, s/veh		1.3			7.0			69.8			71.3	
Approach LOS		A			A			E			E	

Timer	1	2	3	4	5	6	7	8
Assigned Phs		2		4	5	6		8
Phs Duration (G+Y+Rc), s		135.8		24.2	10.4	125.4		24.2
Change Period (Y+Rc), s		5.4		5.4	5.4	5.4		5.4
Max Green Setting (Gmax), s		124.6		24.6	14.6	104.6		24.6
Max Q Clear Time (g_c+I1), s		2.0		18.3	4.2	13.7		12.4
Green Ext Time (p_c), s		42.3		0.6	0.2	38.9		0.9

Intersection Summary	
HCM 2010 Ctrl Delay	8.3
HCM 2010 LOS	A

Movement	EBL	EBT	EBR	WBL	WBT	WBR	NBL	NBT	NBR	SBL	SBT	SBR
Lane Configurations												
Traffic Volume (veh/h)	110	1310	110	10	680	50	140	40	220	110	20	70
Future Volume (veh/h)	110	1310	110	10	680	50	140	40	220	110	20	70
Number	5	2	12	1	6	16	3	8	18	7	4	14
Initial Q (Qb), veh	0	0	0	0	0	0	0	0	0	0	0	0
Ped-Bike Adj(A_pbT)	1.00		1.00	1.00		1.00	1.00		1.00	1.00		1.00
Parking Bus, Adj	1.00	1.00	1.00	1.00	1.00	1.00	1.00	1.00	1.00	1.00	1.00	1.00
Adj Sat Flow, veh/h/ln	1863	1863	1900	1863	1863	1900	1863	1863	1863	1863	1863	1863
Adj Flow Rate, veh/h	120	1424	120	11	739	54	152	43	239	120	22	76
Adj No. of Lanes	1	2	0	1	2	0	1	1	1	1	1	1
Peak Hour Factor	0.92	0.92	0.92	0.92	0.92	0.92	0.92	0.92	0.92	0.92	0.92	0.92
Percent Heavy Veh, %	2	2	2	2	2	2	2	2	2	2	2	2
Cap, veh/h	518	2368	199	177	2329	170	252	112	114	222	79	118
Arrive On Green	0.01	0.24	0.24	0.01	0.70	0.70	0.09	0.06	0.06	0.08	0.04	0.04
Sat Flow, veh/h	1774	3306	277	1774	3345	244	1774	1863	1583	1774	1863	1583
Grp Volume(v), veh/h	120	759	785	11	391	402	152	43	239	120	22	76
Grp Sat Flow(s),veh/h/ln	1774	1770	1814	1774	1770	1820	1774	1863	1583	1774	1863	1583
Q Serve(g_s), s	3.1	61.0	61.7	0.3	13.8	13.8	12.9	3.6	9.6	10.2	1.8	6.8
Cycle Q Clear(g_c), s	3.1	61.0	61.7	0.3	13.8	13.8	12.9	3.6	9.6	10.2	1.8	6.8
Prop In Lane	1.00		0.15	1.00		0.13	1.00		1.00	1.00		1.00
Lane Grp Cap(c), veh/h	518	1268	1299	177	1232	1267	252	112	114	222	79	118
V/C Ratio(X)	0.23	0.60	0.60	0.06	0.32	0.32	0.60	0.38	2.09	0.54	0.28	0.64
Avail Cap(c_a), veh/h	556	1268	1299	417	1232	1267	291	112	114	259	79	118
HCM Platoon Ratio	0.33	0.33	0.33	1.00	1.00	1.00	1.00	1.00	1.00	1.00	1.00	1.00
Upstream Filter(I)	0.82	0.82	0.82	0.96	0.96	0.96	1.00	1.00	1.00	1.00	1.00	1.00
Uniform Delay (d), s/veh	7.2	40.6	40.9	17.9	9.5	9.5	65.2	72.4	74.2	66.6	74.2	72.0
Incr Delay (d2), s/veh	0.2	1.7	1.7	0.1	0.7	0.6	2.7	2.2	520.9	2.0	1.9	11.4
Initial Q Delay(d3),s/veh	0.0	0.0	0.0	0.0	0.0	0.0	0.0	0.0	0.0	0.0	0.0	0.0
%ile BackOfQ(50%),veh/ln	1.5	30.6	31.6	0.2	7.0	7.2	6.5	1.9	21.6	5.1	1.0	3.6
LnGrp Delay(d),s/veh	7.4	42.4	42.6	18.0	10.1	10.1	67.9	74.5	595.1	68.6	76.1	83.4
LnGrp LOS	A	D	D	B	B	B	E	E	F	E	E	F
Approach Vol, veh/h		1664			804			434			218	
Approach Delay, s/veh		39.9			10.2			358.9			74.5	
Approach LOS		D			B			F			E	

Timer	1	2	3	4	5	6	7	8
Assigned Phs	1	2	3	4	5	6	7	8
Phs Duration (G+Y+Rc), s	7.3	120.0	20.5	12.2	10.5	116.8	17.6	15.0
Change Period (Y+Rc), s	5.4	5.4	5.4	5.4	5.4	5.4	5.4	5.4
Max Green Setting (Gmax), s	23.6	89.6	18.6	6.6	8.6	104.6	15.6	9.6
Max Q Clear Time (g_c+I1), s	2.3	63.7	14.9	8.8	5.1	15.8	12.2	11.6
Green Ext Time (p_c), s	0.0	17.4	0.1	0.0	0.1	31.4	0.1	0.0

Intersection Summary	
HCM 2010 Ctrl Delay	79.1
HCM 2010 LOS	E

Movement	EBL	EBT	WBT	WBR	SBL	SBR
Lane Configurations						
Traffic Volume (veh/h)	120	2200	1850	200	290	20
Future Volume (veh/h)	120	2200	1850	200	290	20
Number	5	2	6	16	7	14
Initial Q (Qb), veh	0	0	0	0	0	0
Ped-Bike Adj(A_pbT)	1.00			1.00	1.00	1.00
Parking Bus, Adj	1.00	1.00	1.00	1.00	1.00	1.00
Adj Sat Flow, veh/h/ln	1863	1863	1863	1900	1863	1863
Adj Flow Rate, veh/h	130	2391	2011	217	315	22
Adj No. of Lanes	1	3	3	0	2	1
Peak Hour Factor	0.92	0.92	0.92	0.92	0.92	0.92
Percent Heavy Veh, %	2	2	2	2	2	2
Cap, veh/h	199	4195	3547	379	370	170
Arrive On Green	0.06	1.00	0.76	0.76	0.11	0.11
Sat Flow, veh/h	1774	5253	4834	499	3442	1583
Grp Volume(v), veh/h	130	2391	1456	772	315	22
Grp Sat Flow(s),veh/h/ln	1774	1695	1695	1775	1721	1583
Q Serve(g_s), s	2.6	0.0	28.9	29.6	14.4	2.0
Cycle Q Clear(g_c), s	2.6	0.0	28.9	29.6	14.4	2.0
Prop In Lane	1.00			0.28	1.00	1.00
Lane Grp Cap(c), veh/h	199	4195	2577	1349	370	170
V/C Ratio(X)	0.65	0.57	0.56	0.57	0.85	0.13
Avail Cap(c_a), veh/h	361	4195	2577	1349	551	253
HCM Platoon Ratio	2.00	2.00	1.00	1.00	1.00	1.00
Upstream Filter(I)	0.77	0.77	0.09	0.09	1.00	1.00
Uniform Delay (d), s/veh	14.6	0.0	8.1	8.2	70.1	64.6
Incr Delay (d2), s/veh	2.8	0.4	0.1	0.2	8.2	0.3
Initial Q Delay(d3),s/veh	0.0	0.0	0.0	0.0	0.0	0.0
%ile BackOfQ(50%),veh/ln	4.2	0.2	13.4	14.4	7.3	1.9
LnGrp Delay(d),s/veh	17.4	0.4	8.2	8.3	78.3	65.0
LnGrp LOS	B	A	A	A	E	E
Approach Vol, veh/h		2521	2228		337	
Approach Delay, s/veh		1.3	8.2		77.4	
Approach LOS		A	A		E	

Timer	1	2	3	4	5	6	7	8
Assigned Phs		2		4	5	6		
Phs Duration (G+Y+Rc), s		137.4		22.6	10.4	127.0		
Change Period (Y+Rc), s		5.4		5.4	5.4	5.4		
Max Green Setting (Gmax), s		123.6		25.6	19.6	98.6		
Max Q Clear Time (g_c+I1), s		2.0		16.4	4.6	31.6		
Green Ext Time (p_c), s		113.1		0.8	0.3	64.4		

Intersection Summary	
HCM 2010 Ctrl Delay	9.4
HCM 2010 LOS	A

Movement	EBT	EBR	WBL	WBT	NBL	NBR
Lane Configurations						
Traffic Volume (veh/h)	2120	110	100	1810	10	90
Future Volume (veh/h)	2120	110	100	1810	10	90
Number	2	12	1	6	3	18
Initial Q (Qb), veh	0	0	0	0	0	0
Ped-Bike Adj(A_pbT)		1.00	1.00		1.00	1.00
Parking Bus, Adj	1.00	1.00	1.00	1.00	1.00	1.00
Adj Sat Flow, veh/h/ln	1863	1900	1863	1863	1863	1863
Adj Flow Rate, veh/h	2304	120	109	1967	11	98
Adj No. of Lanes	3	0	1	3	1	2
Peak Hour Factor	0.92	0.92	0.92	0.92	0.92	0.92
Percent Heavy Veh, %	2	2	2	2	2	2
Cap, veh/h	4062	210	216	4501	84	132
Arrive On Green	1.00	1.00	0.03	0.89	0.05	0.05
Sat Flow, veh/h	5119	256	1774	5253	1774	2787
Grp Volume(v), veh/h	1572	852	109	1967	11	98
Grp Sat Flow(s),veh/h/ln	1695	1818	1774	1695	1774	1393
Q Serve(g_s), s	0.0	0.0	1.4	11.6	1.0	5.6
Cycle Q Clear(g_c), s	0.0	0.0	1.4	11.6	1.0	5.6
Prop In Lane		0.14	1.00		1.00	1.00
Lane Grp Cap(c), veh/h	2781	1491	216	4501	84	132
V/C Ratio(X)	0.57	0.57	0.51	0.44	0.13	0.74
Avail Cap(c_a), veh/h	2781	1491	378	4501	118	185
HCM Platoon Ratio	2.00	2.00	1.00	1.00	1.00	1.00
Upstream Filter(I)	0.64	0.64	0.73	0.73	1.00	1.00
Uniform Delay (d), s/veh	0.0	0.0	1.6	1.7	73.1	75.3
Incr Delay (d2), s/veh	0.5	1.0	1.3	0.2	0.7	9.6
Initial Q Delay(d3),s/veh	0.0	0.0	0.0	0.0	0.0	0.0
%ile BackOfQ(50%),veh/ln	0.2	0.4	0.7	5.4	0.5	2.3
LnGrp Delay(d),s/veh	0.5	1.0	3.0	1.9	73.8	84.9
LnGrp LOS	A	A	A	A	E	F
Approach Vol, veh/h	2424			2076	109	
Approach Delay, s/veh	0.7			2.0	83.8	
Approach LOS	A			A	F	

Timer	1	2	3	4	5	6	7	8
Assigned Phs	1	2				6		8
Phs Duration (G+Y+Rc), s	10.4	136.7				147.0		13.0
Change Period (Y+Rc), s	5.4	5.4				5.4		5.4
Max Green Setting (Gmax), s	19.6	113.6				138.6		10.6
Max Q Clear Time (g_c+I1), s	3.4	2.0				13.6		7.6
Green Ext Time (p_c), s	0.2	101.4				112.3		0.1

Intersection Summary	
HCM 2010 Ctrl Delay	3.3
HCM 2010 LOS	A

HCM 2010 analysis supports speed limit in the range of 25 and 55 mph

Movement	EBL	EBT	WBT	WBR	SBL	SBR
Lane Configurations						
Traffic Volume (veh/h)	90	1740	1440	80	90	10
Future Volume (veh/h)	90	1740	1440	80	90	10
Number	5	2	6	16	7	14
Initial Q (Qb), veh	0	0	0	0	0	0
Ped-Bike Adj(A_pbT)	1.00			1.00	1.00	1.00
Parking Bus, Adj	1.00	1.00	1.00	1.00	1.00	1.00
Adj Sat Flow, veh/h/ln	1863	1863	1863	1900	1863	1863
Adj Flow Rate, veh/h	98	1891	1565	87	98	11
Adj No. of Lanes	1	3	3	0	1	1
Peak Hour Factor	0.92	0.92	0.92	0.92	0.92	0.92
Percent Heavy Veh, %	2	2	2	2	2	2
Cap, veh/h	313	4397	3945	219	120	107
Arrive On Green	0.03	0.86	0.80	0.80	0.07	0.07
Sat Flow, veh/h	1774	5253	5098	274	1774	1583
Grp Volume(v), veh/h	98	1891	1076	576	98	11
Grp Sat Flow(s),veh/h/ln	1774	1695	1695	1814	1774	1583
Q Serve(g_s), s	1.5	12.8	14.9	14.9	8.7	1.0
Cycle Q Clear(g_c), s	1.5	12.8	14.9	14.9	8.7	1.0
Prop In Lane	1.00			0.15	1.00	1.00
Lane Grp Cap(c), veh/h	313	4397	2712	1452	120	107
V/C Ratio(X)	0.31	0.43	0.40	0.40	0.81	0.10
Avail Cap(c_a), veh/h	475	4397	2712	1452	295	263
HCM Platoon Ratio	1.00	1.00	1.00	1.00	1.00	1.00
Upstream Filter(I)	1.00	1.00	0.90	0.90	1.00	1.00
Uniform Delay (d), s/veh	3.4	2.3	4.7	4.7	73.6	70.0
Incr Delay (d2), s/veh	0.6	0.3	0.1	0.2	12.3	0.4
Initial Q Delay(d3),s/veh	0.0	0.0	0.0	0.0	0.0	0.0
%ile BackOfQ(50%),veh/ln	0.7	5.9	6.9	7.4	4.7	1.0
LnGrp Delay(d),s/veh	4.0	2.6	4.8	4.8	85.9	70.4
LnGrp LOS	A	A	A	A	F	E
Approach Vol, veh/h		1989	1652		109	
Approach Delay, s/veh		2.7	4.8		84.4	
Approach LOS		A	A		F	

Timer	1	2	3	4	5	6	7	8
Assigned Phs		2		4	5	6		
Phs Duration (G+Y+Rc), s		143.7		16.3	10.3	133.4		
Change Period (Y+Rc), s		5.4		5.4	5.4	5.4		
Max Green Setting (Gmax), s		122.6		26.6	19.6	97.6		
Max Q Clear Time (g_c+I1), s		14.8		10.7	3.5	16.9		
Green Ext Time (p_c), s		79.6		0.2	0.2	64.0		

Intersection Summary	
HCM 2010 Ctrl Delay	6.0
HCM 2010 LOS	A

Movement	EBL	EBT	EBR	WBL	WBT	WBR	NBL	NBT	NBR	SBL	SBT	SBR
Lane Configurations												
Traffic Volume (veh/h)	30	1170	30	20	650	20	20	0	80	70	0	30
Future Volume (veh/h)	30	1170	30	20	650	20	20	0	80	70	0	30
Number	5	2	12	1	6	16	3	8	18	7	4	14
Initial Q (Qb), veh	0	0	0	0	0	0	0	0	0	0	0	0
Ped-Bike Adj(A_pbT)	1.00		1.00	1.00		1.00	1.00		1.00	1.00		1.00
Parking Bus, Adj	1.00	1.00	1.00	1.00	1.00	1.00	1.00	1.00	1.00	1.00	1.00	1.00
Adj Sat Flow, veh/h/ln	1863	1863	1900	1863	1863	1900	1900	1863	1900	1900	1863	1863
Adj Flow Rate, veh/h	33	1272	33	22	707	22	22	0	87	76	0	33
Adj No. of Lanes	1	2	0	1	2	0	0	2	0	0	1	1
Peak Hour Factor	0.92	0.92	0.92	0.92	0.92	0.92	0.92	0.92	0.92	0.92	0.92	0.92
Percent Heavy Veh, %	2	2	2	2	2	2	2	2	2	2	2	2
Cap, veh/h	568	2597	67	387	2566	80	88	0	205	159	0	226
Arrive On Green	0.05	1.00	1.00	0.02	0.73	0.73	0.14	0.00	0.14	0.14	0.00	0.14
Sat Flow, veh/h	1774	3525	91	1774	3504	109	301	0	1441	801	0	1583
Grp Volume(v), veh/h	33	638	667	22	357	372	22	0	87	76	0	33
Grp Sat Flow(s),veh/h/ln	1774	1770	1847	1774	1770	1844	301	0	1441	801	0	1583
Q Serve(g_s), s	0.7	0.0	0.0	0.5	10.8	10.8	2.5	0.0	8.8	9.0	0.0	2.9
Cycle Q Clear(g_c), s	0.7	0.0	0.0	0.5	10.8	10.8	20.3	0.0	8.8	17.8	0.0	2.9
Prop In Lane	1.00		0.05	1.00		0.06	1.00		1.00	1.00		1.00
Lane Grp Cap(c), veh/h	568	1304	1360	387	1296	1350	88	0	205	159	0	226
V/C Ratio(X)	0.06	0.49	0.49	0.06	0.28	0.28	0.25	0.00	0.42	0.48	0.00	0.15
Avail Cap(c_a), veh/h	610	1304	1360	437	1296	1350	129	0	249	198	0	273
HCM Platoon Ratio	2.00	2.00	2.00	1.00	1.00	1.00	1.00	1.00	1.00	1.00	1.00	1.00
Upstream Filter(I)	0.86	0.86	0.86	0.55	0.55	0.55	1.00	0.00	1.00	1.00	0.00	1.00
Uniform Delay (d), s/veh	5.1	0.0	0.0	5.0	7.2	7.2	76.3	0.0	62.6	70.7	0.0	60.1
Incr Delay (d2), s/veh	0.0	1.1	1.1	0.0	0.3	0.3	1.5	0.0	1.4	2.2	0.0	0.3
Initial Q Delay(d3),s/veh	0.0	0.0	0.0	0.0	0.0	0.0	0.0	0.0	0.0	0.0	0.0	0.0
%ile BackOfQ(50%),veh/ln	0.3	0.4	0.4	0.2	5.4	5.6	1.0	0.0	3.6	3.3	0.0	1.3
LnGrp Delay(d),s/veh	5.1	1.1	1.1	5.0	7.5	7.5	77.8	0.0	64.0	72.9	0.0	60.4
LnGrp LOS	A	A	A	A	A	A	E		E	E		E
Approach Vol, veh/h		1338			751			109			109	
Approach Delay, s/veh		1.2			7.4			66.8			69.1	
Approach LOS		A			A			E			E	

Timer	1	2	3	4	5	6	7	8
Assigned Phs	1	2		4	5	6		8
Phs Duration (G+Y+Rc), s	8.5	123.3		28.2	9.2	122.5		28.2
Change Period (Y+Rc), s	5.4	5.4		5.4	5.4	5.4		5.4
Max Green Setting (Gmax), s	7.6	108.6		27.6	7.6	108.6		27.6
Max Q Clear Time (g_c+I1), s	2.5	2.0		19.8	2.7	12.8		22.3
Green Ext Time (p_c), s	0.0	24.0		0.7	0.0	23.8		0.5

Intersection Summary	
HCM 2010 Ctrl Delay	9.5
HCM 2010 LOS	A

Movement	EBL	EBT	EBR	WBL	WBT	WBR	NBL	NBT	NBR	SBL	SBT	SBR
Lane Configurations												
Traffic Volume (veh/h)	30	970	30	60	620	60	30	70	100	100	70	30
Future Volume (veh/h)	30	970	30	60	620	60	30	70	100	100	70	30
Number	5	2	12	1	6	16	3	8	18	7	4	14
Initial Q (Qb), veh	0	0	0	0	0	0	0	0	0	0	0	0
Ped-Bike Adj(A_pbT)	1.00		1.00	1.00		1.00	1.00		1.00	1.00		1.00
Parking Bus, Adj	1.00	1.00	1.00	1.00	1.00	1.00	1.00	1.00	1.00	1.00	1.00	1.00
Adj Sat Flow, veh/h/ln	1863	1863	1900	1863	1863	1900	1863	1863	1900	1863	1863	1900
Adj Flow Rate, veh/h	33	1054	33	65	674	65	33	76	109	109	76	33
Adj No. of Lanes	1	2	0	1	2	0	1	1	0	1	1	0
Peak Hour Factor	0.92	0.92	0.92	0.92	0.92	0.92	0.92	0.92	0.92	0.92	0.92	0.92
Percent Heavy Veh, %	2	2	2	2	2	2	2	2	2	2	2	2
Cap, veh/h	486	2249	70	429	2113	204	234	89	128	185	209	91
Arrive On Green	0.05	1.00	1.00	0.03	0.65	0.65	0.02	0.13	0.13	0.06	0.17	0.17
Sat Flow, veh/h	1774	3503	110	1774	3263	314	1774	693	994	1774	1233	535
Grp Volume(v), veh/h	33	532	555	65	365	374	33	0	185	109	0	109
Grp Sat Flow(s),veh/h/ln	1774	1770	1843	1774	1770	1807	1774	0	1687	1774	0	1768
Q Serve(g_s), s	1.0	0.0	0.0	2.0	14.7	14.7	2.6	0.0	17.2	8.3	0.0	8.7
Cycle Q Clear(g_c), s	1.0	0.0	0.0	2.0	14.7	14.7	2.6	0.0	17.2	8.3	0.0	8.7
Prop In Lane	1.00		0.06	1.00		0.17	1.00		0.59	1.00		0.30
Lane Grp Cap(c), veh/h	486	1136	1184	429	1146	1170	234	0	217	185	0	299
V/C Ratio(X)	0.07	0.47	0.47	0.15	0.32	0.32	0.14	0.00	0.85	0.59	0.00	0.36
Avail Cap(c_a), veh/h	516	1136	1184	483	1146	1170	265	0	354	233	0	460
HCM Platoon Ratio	2.00	2.00	2.00	1.00	1.00	1.00	1.00	1.00	1.00	1.00	1.00	1.00
Upstream Filter(I)	0.93	0.93	0.93	0.98	0.98	0.98	1.00	0.00	1.00	1.00	0.00	1.00
Uniform Delay (d), s/veh	9.5	0.0	0.0	9.0	12.5	12.5	58.5	0.0	68.2	55.0	0.0	58.8
Incr Delay (d2), s/veh	0.1	1.3	1.2	0.2	0.7	0.7	0.3	0.0	10.3	3.0	0.0	0.7
Initial Q Delay(d3),s/veh	0.0	0.0	0.0	0.0	0.0	0.0	0.0	0.0	0.0	0.0	0.0	0.0
%ile BackOfQ(50%),veh/ln	0.5	0.4	0.4	1.0	7.3	7.5	1.3	0.0	8.6	4.2	0.0	4.3
LnGrp Delay(d),s/veh	9.5	1.3	1.2	9.1	13.2	13.2	58.8	0.0	78.4	58.0	0.0	59.6
LnGrp LOS	A	A	A	A	B	B	E		E	E		E
Approach Vol, veh/h		1120			804			218			218	
Approach Delay, s/veh		1.5			12.9			75.5			58.8	
Approach LOS		A			B			E			E	

Timer	1	2	3	4	5	6	7	8
Assigned Phs	1	2	3	4	5	6	7	8
Phs Duration (G+Y+Rc), s	10.1	108.1	9.2	32.5	9.2	109.0	15.7	26.0
Change Period (Y+Rc), s	5.4	5.4	5.4	5.4	5.4	5.4	5.4	5.4
Max Green Setting (Gmax), s	9.6	80.6	6.6	41.6	6.6	83.6	14.6	33.6
Max Q Clear Time (g_c+I1), s	4.0	2.0	4.6	10.7	3.0	16.7	10.3	19.2
Green Ext Time (p_c), s	0.0	18.3	0.0	1.9	0.0	17.9	0.1	1.5

Intersection Summary	
HCM 2010 Ctrl Delay	17.5
HCM 2010 LOS	B

Movement	EBT	EBR	WBL	WBT	NBL	NBR
Lane Configurations						
Traffic Volume (veh/h)	770	40	70	640	90	210
Future Volume (veh/h)	770	40	70	640	90	210
Number	2	12	1	6	3	18
Initial Q (Qb), veh	0	0	0	0	0	0
Ped-Bike Adj(A_pbT)		1.00	1.00		1.00	1.00
Parking Bus, Adj	1.00	1.00	1.00	1.00	1.00	1.00
Adj Sat Flow, veh/h/ln	1863	1900	1863	1863	1863	1863
Adj Flow Rate, veh/h	837	43	76	696	98	228
Adj No. of Lanes	2	0	1	2	1	1
Peak Hour Factor	0.92	0.92	0.92	0.92	0.92	0.92
Percent Heavy Veh, %	2	2	2	2	2	2
Cap, veh/h	2453	126	491	2761	270	289
Arrive On Green	0.72	0.72	0.03	0.78	0.15	0.15
Sat Flow, veh/h	3518	176	1774	3632	1774	1583
Grp Volume(v), veh/h	432	448	76	696	98	228
Grp Sat Flow(s),veh/h/ln	1770	1832	1774	1770	1774	1583
Q Serve(g_s), s	14.7	14.7	1.7	8.6	7.9	22.0
Cycle Q Clear(g_c), s	14.7	14.7	1.7	8.6	7.9	22.0
Prop In Lane		0.10	1.00		1.00	1.00
Lane Grp Cap(c), veh/h	1267	1312	491	2761	270	289
V/C Ratio(X)	0.34	0.34	0.15	0.25	0.36	0.79
Avail Cap(c_a), veh/h	1267	1312	799	2761	306	321
HCM Platoon Ratio	1.00	1.00	1.00	1.00	1.00	1.00
Upstream Filter(I)	1.00	1.00	0.96	0.96	1.00	1.00
Uniform Delay (d), s/veh	8.5	8.5	5.8	4.8	60.8	62.5
Incr Delay (d2), s/veh	0.7	0.7	0.1	0.0	0.8	11.4
Initial Q Delay(d3),s/veh	0.0	0.0	0.0	0.0	0.0	0.0
%ile BackOfQ(50%),veh/ln	7.3	7.6	0.8	4.2	4.0	10.5
LnGrp Delay(d),s/veh	9.3	9.2	6.0	4.9	61.7	73.8
LnGrp LOS	A	A	A	A	E	E
Approach Vol, veh/h	880			772	326	
Approach Delay, s/veh	9.2			5.0	70.2	
Approach LOS	A			A	E	

Timer	1	2	3	4	5	6	7	8
Assigned Phs	1	2				6		8
Phs Duration (G+Y+Rc), s	10.2	120.0				130.2		29.8
Change Period (Y+Rc), s	5.4	5.4				5.4		5.4
Max Green Setting (Gmax), s	32.6	83.6				121.6		27.6
Max Q Clear Time (g_c+I1), s	3.7	16.7				10.6		24.0
Green Ext Time (p_c), s	0.2	14.6				14.9		0.4

Intersection Summary	
HCM 2010 Ctrl Delay	17.6
HCM 2010 LOS	B

Movement	EBL	EBT	EBR	WBL	WBT	WBR	NBL	NBT	NBR	SBL	SBT	SBR
Lane Configurations												
Traffic Volume (veh/h)	40	480	40	40	690	40	70	120	110	180	90	30
Future Volume (veh/h)	40	480	40	40	690	40	70	120	110	180	90	30
Number	5	2	12	1	6	16	3	8	18	7	4	14
Initial Q (Qb), veh	0	0	0	0	0	0	0	0	0	0	0	0
Ped-Bike Adj(A_pbT)	1.00		1.00	1.00		1.00	1.00		1.00	1.00		1.00
Parking Bus, Adj	1.00	1.00	1.00	1.00	1.00	1.00	1.00	1.00	1.00	1.00	1.00	1.00
Adj Sat Flow, veh/h/ln	1863	1863	1900	1863	1863	1900	1863	1863	1900	1863	1863	1900
Adj Flow Rate, veh/h	43	522	43	43	750	43	76	130	120	196	98	33
Adj No. of Lanes	1	1	0	1	1	0	1	1	0	1	1	0
Peak Hour Factor	0.92	0.92	0.92	0.92	0.92	0.92	0.92	0.92	0.92	0.92	0.92	0.92
Percent Heavy Veh, %	2	2	2	2	2	2	2	2	2	2	2	2
Cap, veh/h	221	915	75	373	941	54	431	290	268	327	433	146
Arrive On Green	0.54	0.54	0.54	0.54	0.54	0.54	0.32	0.32	0.32	0.32	0.32	0.32
Sat Flow, veh/h	681	1698	140	842	1745	100	1254	893	824	1125	1334	449
Grp Volume(v), veh/h	43	0	565	43	0	793	76	0	250	196	0	131
Grp Sat Flow(s),veh/h/ln	681	0	1838	842	0	1845	1254	0	1717	1125	0	1783
Q Serve(g_s), s	4.3	0.0	16.2	2.8	0.0	27.5	3.7	0.0	9.1	13.2	0.0	4.2
Cycle Q Clear(g_c), s	31.8	0.0	16.2	19.0	0.0	27.5	8.0	0.0	9.1	22.3	0.0	4.2
Prop In Lane	1.00		0.08	1.00		0.05	1.00		0.48	1.00		0.25
Lane Grp Cap(c), veh/h	221	0	991	373	0	994	431	0	558	327	0	579
V/C Ratio(X)	0.19	0.00	0.57	0.12	0.00	0.80	0.18	0.00	0.45	0.60	0.00	0.23
Avail Cap(c_a), veh/h	289	0	1174	457	0	1178	476	0	620	368	0	644
HCM Platoon Ratio	1.00	1.00	1.00	1.00	1.00	1.00	1.00	1.00	1.00	1.00	1.00	1.00
Upstream Filter(I)	1.00	0.00	1.00	1.00	0.00	1.00	1.00	0.00	1.00	1.00	0.00	1.00
Uniform Delay (d), s/veh	27.6	0.0	12.2	18.5	0.0	14.8	22.4	0.0	21.1	30.0	0.0	19.5
Incr Delay (d2), s/veh	0.4	0.0	0.5	0.1	0.0	3.3	0.2	0.0	0.6	2.2	0.0	0.2
Initial Q Delay(d3),s/veh	0.0	0.0	0.0	0.0	0.0	0.0	0.0	0.0	0.0	0.0	0.0	0.0
%ile BackOfQ(50%),veh/ln	0.8	0.0	8.3	0.7	0.0	14.8	1.3	0.0	4.4	4.3	0.0	2.1
LnGrp Delay(d),s/veh	28.1	0.0	12.7	18.6	0.0	18.1	22.6	0.0	21.7	32.2	0.0	19.7
LnGrp LOS	C		B	B		B	C		C	C		B
Approach Vol, veh/h		608			836			326			327	
Approach Delay, s/veh		13.8			18.1			21.9			27.2	
Approach LOS		B			B			C			C	

Timer	1	2	3	4	5	6	7	8
Assigned Phs		2		4		6		8
Phs Duration (G+Y+Rc), s		48.1		31.1		48.1		31.1
Change Period (Y+Rc), s		5.4		5.4		5.4		5.4
Max Green Setting (Gmax), s		50.6		28.6		50.6		28.6
Max Q Clear Time (g_c+I1), s		33.8		24.3		29.5		11.1
Green Ext Time (p_c), s		8.9		1.4		10.1		3.2

Intersection Summary	
HCM 2010 Ctrl Delay	18.9
HCM 2010 LOS	B

Movement	EBL	EBT	EBR	WBL	WBT	WBR	NBL	NBT	NBR	SBL	SBT	SBR
Lane Configurations												
Traffic Volume (veh/h)	31	138	115	74	173	304	86	423	70	349	727	28
Future Volume (veh/h)	31	138	115	74	173	304	86	423	70	349	727	28
Number	5	2	12	1	6	16	3	8	18	7	4	14
Initial Q (Qb), veh	0	0	0	0	0	0	0	0	0	0	0	0
Ped-Bike Adj(A_pbT)	1.00		1.00	1.00		1.00	1.00		1.00	1.00		1.00
Parking Bus, Adj	1.00	1.00	1.00	1.00	1.00	1.00	1.00	1.00	1.00	1.00	1.00	1.00
Adj Sat Flow, veh/h/ln	1863	1863	1900	1863	1863	1863	1863	1863	1900	1863	1863	1900
Adj Flow Rate, veh/h	36	155	140	106	192	349	108	516	92	375	799	32
Adj No. of Lanes	1	1	0	1	1	1	1	2	0	1	2	0
Peak Hour Factor	0.86	0.89	0.82	0.70	0.90	0.87	0.80	0.82	0.76	0.93	0.91	0.88
Percent Heavy Veh, %	2	2	2	2	2	2	2	2	2	2	2	2
Cap, veh/h	310	210	190	288	487	414	315	693	123	483	1219	49
Arrive On Green	0.04	0.23	0.23	0.06	0.26	0.26	0.07	0.23	0.23	0.19	0.35	0.35
Sat Flow, veh/h	1774	903	816	1774	1863	1583	1774	3005	533	1774	3469	139
Grp Volume(v), veh/h	36	0	295	106	192	349	108	303	305	375	408	423
Grp Sat Flow(s),veh/h/ln	1774	0	1719	1774	1863	1583	1774	1770	1769	1774	1770	1838
Q Serve(g_s), s	1.1	0.0	12.0	3.4	6.4	15.7	3.4	12.0	12.1	11.2	14.6	14.6
Cycle Q Clear(g_c), s	1.1	0.0	12.0	3.4	6.4	15.7	3.4	12.0	12.1	11.2	14.6	14.6
Prop In Lane	1.00		0.47	1.00		1.00	1.00		0.30	1.00		0.08
Lane Grp Cap(c), veh/h	310	0	400	288	487	414	315	408	408	483	622	646
V/C Ratio(X)	0.12	0.00	0.74	0.37	0.39	0.84	0.34	0.74	0.75	0.78	0.66	0.66
Avail Cap(c_a), veh/h	365	0	518	300	569	483	406	442	441	661	742	771
HCM Platoon Ratio	1.00	1.00	1.00	1.00	1.00	1.00	1.00	1.00	1.00	1.00	1.00	1.00
Upstream Filter(I)	1.00	0.00	1.00	1.00	1.00	1.00	1.00	1.00	1.00	1.00	1.00	1.00
Uniform Delay (d), s/veh	20.7	0.0	26.8	20.9	22.9	26.4	20.1	26.9	26.9	16.9	20.6	20.6
Incr Delay (d2), s/veh	0.2	0.0	4.0	0.8	0.5	11.4	0.6	6.1	6.4	4.0	1.6	1.5
Initial Q Delay(d3),s/veh	0.0	0.0	0.0	0.0	0.0	0.0	0.0	0.0	0.0	0.0	0.0	0.0
%ile BackOfQ(50%),veh/ln	0.6	0.0	6.1	1.7	3.3	8.2	1.7	6.5	6.6	6.0	7.4	7.7
LnGrp Delay(d),s/veh	20.9	0.0	30.7	21.7	23.4	37.7	20.8	33.0	33.3	20.9	22.2	22.1
LnGrp LOS	C		C	C	C	D	C	C	C	C	C	C
Approach Vol, veh/h		331			647			716			1206	
Approach Delay, s/veh		29.6			30.9			31.3			21.8	
Approach LOS		C			C			C			C	

Timer	1	2	3	4	5	6	7	8
Assigned Phs	1	2	3	4	5	6	7	8
Phs Duration (G+Y+Rc), s	10.2	22.9	10.3	31.9	8.0	25.1	19.4	22.8
Change Period (Y+Rc), s	5.4	5.4	5.4	5.4	5.4	5.4	5.4	5.4
Max Green Setting (Gmax), s	5.3	22.7	8.8	31.6	5.0	23.0	21.6	18.8
Max Q Clear Time (g_c+I1), s	5.4	14.0	5.4	16.6	3.1	17.7	13.2	14.1
Green Ext Time (p_c), s	0.0	2.7	0.1	7.9	0.0	2.0	0.8	3.3

Intersection Summary	
HCM 2010 Ctrl Delay	27.0
HCM 2010 LOS	C

Movement	EBL	EBT	EBR	WBL	WBT	WBR	NBL	NBT	NBR	SBL	SBT	SBR
Lane Configurations												
Traffic Volume (veh/h)	204	528	102	512	1007	533	143	829	272	469	1772	190
Future Volume (veh/h)	204	528	102	512	1007	533	143	829	272	469	1772	190
Number	5	2	12	1	6	16	3	8	18	7	4	14
Initial Q (Qb), veh	0	0	0	0	0	0	0	0	0	0	0	0
Ped-Bike Adj(A_pbT)	1.00		1.00	1.00		1.00	1.00		1.00	1.00		1.00
Parking Bus, Adj	1.00	1.00	1.00	1.00	1.00	1.00	1.00	1.00	1.00	1.00	1.00	1.00
Adj Sat Flow, veh/h/ln	1863	1863	1900	1863	1863	1863	1863	1863	1863	1863	1863	1900
Adj Flow Rate, veh/h	252	562	113	575	1131	592	196	911	349	484	2014	224
Adj No. of Lanes	2	2	0	2	2	1	2	2	1	2	3	0
Peak Hour Factor	0.81	0.94	0.90	0.89	0.89	0.90	0.73	0.91	0.78	0.97	0.88	0.85
Percent Heavy Veh, %	2	2	2	2	2	2	2	2	2	2	2	2
Cap, veh/h	252	631	126	587	1104	739	206	1118	770	533	1910	210
Arrive On Green	0.15	0.43	0.43	0.17	0.31	0.31	0.06	0.32	0.32	0.15	0.41	0.41
Sat Flow, veh/h	3442	2939	589	3442	3539	1583	3442	3539	1583	3442	4651	512
Grp Volume(v), veh/h	252	338	337	575	1131	592	196	911	349	484	1463	775
Grp Sat Flow(s),veh/h/ln	1721	1770	1759	1721	1770	1583	1721	1770	1583	1721	1695	1772
Q Serve(g_s), s	11.0	26.4	26.6	25.0	46.8	46.8	8.5	35.6	8.1	20.7	61.6	61.6
Cycle Q Clear(g_c), s	11.0	26.4	26.6	25.0	46.8	46.8	8.5	35.6	8.1	20.7	61.6	61.6
Prop In Lane	1.00		0.33	1.00		1.00	1.00		1.00	1.00		0.29
Lane Grp Cap(c), veh/h	252	380	378	587	1104	739	206	1118	770	533	1392	728
V/C Ratio(X)	1.00	0.89	0.89	0.98	1.02	0.80	0.95	0.82	0.45	0.91	1.05	1.07
Avail Cap(c_a), veh/h	252	380	378	587	1104	739	206	1118	770	578	1392	728
HCM Platoon Ratio	2.00	2.00	2.00	1.00	1.00	1.00	1.00	1.00	1.00	1.00	1.00	1.00
Upstream Filter(I)	0.96	0.96	0.96	1.00	1.00	1.00	1.00	1.00	1.00	1.00	1.00	1.00
Uniform Delay (d), s/veh	64.0	41.1	41.2	61.9	51.6	34.0	70.3	47.3	9.5	62.3	44.2	44.2
Incr Delay (d2), s/veh	55.1	24.5	25.2	31.7	33.4	6.3	48.2	4.8	0.4	17.5	38.6	52.1
Initial Q Delay(d3),s/veh	0.0	0.0	0.0	0.0	0.0	0.0	0.0	0.0	0.0	0.0	0.0	0.0
%ile BackOfQ(50%),veh/ln	7.1	15.3	15.4	14.5	28.0	22.2	5.4	18.1	4.6	11.2	36.3	40.7
LnGrp Delay(d),s/veh	119.1	65.6	66.4	93.6	85.0	40.3	118.5	52.0	10.0	79.8	82.8	96.3
LnGrp LOS	F	E	E	F	F	D	F	D	A	E	F	F
Approach Vol, veh/h		927			2298			1456			2722	
Approach Delay, s/veh		80.4			75.7			50.9			86.1	
Approach LOS		F			E			D			F	

Timer	1	2	3	4	5	6	7	8
Assigned Phs	1	2	3	4	5	6	7	8
Phs Duration (G+Y+Rc), s	31.0	37.6	14.4	67.0	16.4	52.2	28.6	52.8
Change Period (Y+Rc), s	5.4	5.4	5.4	5.4	5.4	5.4	5.4	5.4
Max Green Setting (Gmax), s	25.6	32.2	9.0	61.6	11.0	46.8	25.2	45.4
Max Q Clear Time (g_c+I1), s	27.0	28.6	10.5	63.6	13.0	48.8	22.7	37.6
Green Ext Time (p_c), s	0.0	1.3	0.0	0.0	0.0	0.0	0.5	4.5

Intersection Summary	
HCM 2010 Ctrl Delay	75.2
HCM 2010 LOS	E

Movement	EBL	EBT	EBR	WBL	WBT	WBR	NBL	NBT	NBR	SBL	SBT	SBR
Lane Configurations												
Traffic Volume (veh/h)	100	1180	30	20	2120	100	20	10	20	260	10	30
Future Volume (veh/h)	100	1180	30	20	2120	100	20	10	20	260	10	30
Number	5	2	12	1	6	16	3	8	18	7	4	14
Initial Q (Qb), veh	0	0	0	0	0	0	0	0	0	0	0	0
Ped-Bike Adj(A_pbT)	1.00		1.00	1.00		1.00	1.00		1.00	1.00		1.00
Parking Bus, Adj	1.00	1.00	1.00	1.00	1.00	1.00	1.00	1.00	1.00	1.00	1.00	1.00
Adj Sat Flow, veh/h/ln	1863	1863	1900	1863	1863	1900	1900	1863	1900	1863	1863	1863
Adj Flow Rate, veh/h	109	1283	33	22	2304	109	22	11	22	291	0	33
Adj No. of Lanes	1	3	0	1	3	0	0	1	0	2	0	1
Peak Hour Factor	0.92	0.92	0.92	0.92	0.92	0.92	0.92	0.92	0.92	0.92	0.92	0.92
Percent Heavy Veh, %	2	2	2	2	2	2	2	2	2	2	2	2
Cap, veh/h	165	3552	91	368	3403	160	28	14	28	349	0	156
Arrive On Green	0.07	1.00	1.00	0.02	0.68	0.68	0.04	0.04	0.04	0.10	0.00	0.10
Sat Flow, veh/h	1774	5099	131	1774	4978	234	683	342	683	3548	0	1583
Grp Volume(v), veh/h	109	853	463	22	1564	849	55	0	0	291	0	33
Grp Sat Flow(s),veh/h/ln	1774	1695	1840	1774	1695	1821	1708	0	0	1774	0	1583
Q Serve(g_s), s	2.9	0.0	0.0	0.6	40.7	41.4	4.8	0.0	0.0	12.1	0.0	2.9
Cycle Q Clear(g_c), s	2.9	0.0	0.0	0.6	40.7	41.4	4.8	0.0	0.0	12.1	0.0	2.9
Prop In Lane	1.00		0.07	1.00		0.13	0.40		0.40	1.00		1.00
Lane Grp Cap(c), veh/h	165	2362	1282	368	2318	1245	70	0	0	349	0	156
V/C Ratio(X)	0.66	0.36	0.36	0.06	0.67	0.68	0.79	0.00	0.00	0.83	0.00	0.21
Avail Cap(c_a), veh/h	255	2362	1282	394	2318	1245	98	0	0	511	0	228
HCM Platoon Ratio	2.00	2.00	2.00	1.00	1.00	1.00	1.00	1.00	1.00	1.00	1.00	1.00
Upstream Filter(I)	0.95	0.95	0.95	0.83	0.83	0.83	1.00	0.00	0.00	1.00	0.00	1.00
Uniform Delay (d), s/veh	23.8	0.0	0.0	6.7	13.9	14.0	71.3	0.0	0.0	66.4	0.0	62.3
Incr Delay (d2), s/veh	4.3	0.4	0.8	0.1	1.3	2.5	24.1	0.0	0.0	7.6	0.0	0.7
Initial Q Delay(d3),s/veh	0.0	0.0	0.0	0.0	0.0	0.0	0.0	0.0	0.0	0.0	0.0	0.0
%ile BackOfQ(50%),veh/ln	3.2	0.1	0.3	0.3	19.3	21.6	2.7	0.0	0.0	6.3	0.0	1.3
LnGrp Delay(d),s/veh	28.0	0.4	0.8	6.7	15.3	16.6	95.4	0.0	0.0	74.0	0.0	62.9
LnGrp LOS	C	A	A	A	B	B	F			E		E
Approach Vol, veh/h		1425			2435			55			324	
Approach Delay, s/veh		2.6			15.6			95.4			72.9	
Approach LOS		A			B			F			E	

Timer	1	2	3	4	5	6	7	8
Assigned Phs	1	2		4	5	6		8
Phs Duration (G+Y+Rc), s	8.4	109.9		20.2	10.4	108.0		11.5
Change Period (Y+Rc), s	5.4	5.4		5.4	5.4	5.4		5.4
Max Green Setting (Gmax), s	5.2	93.0		21.6	12.6	85.6		8.6
Max Q Clear Time (g_c+I1), s	2.6	2.0		14.1	4.9	43.4		6.8
Green Ext Time (p_c), s	0.0	74.0		0.7	0.1	38.1		0.0

Intersection Summary	
HCM 2010 Ctrl Delay	16.7
HCM 2010 LOS	B

Notes

User approved volume balancing among the lanes for turning movement.

Movement	EBL	EBT	EBR	WBL	WBT	WBR	NBL	NBT	NBR	SBL	SBT	SBR
Lane Configurations												
Traffic Volume (veh/h)	602	745	302	187	1307	22	205	478	114	87	647	1102
Future Volume (veh/h)	602	745	302	187	1307	22	205	478	114	87	647	1102
Number	5	2	12	1	6	16	3	8	18	7	4	14
Initial Q (Qb), veh	0	0	0	0	0	0	0	0	0	0	0	0
Ped-Bike Adj(A_pbT)	1.00		1.00	1.00		1.00	1.00		1.00	1.00		1.00
Parking Bus, Adj	1.00	1.00	1.00	1.00	1.00	1.00	1.00	1.00	1.00	1.00	1.00	1.00
Adj Sat Flow, veh/h/ln	1863	1863	1900	1863	1863	1863	1863	1863	1863	1863	1863	1863
Adj Flow Rate, veh/h	676	866	360	203	1376	0	228	531	146	100	696	0
Adj No. of Lanes	2	2	0	1	2	1	1	2	1	1	2	1
Peak Hour Factor	0.89	0.86	0.84	0.92	0.95	0.69	0.90	0.90	0.78	0.87	0.93	0.86
Percent Heavy Veh, %	2	2	2	2	2	2	2	2	2	2	2	2
Cap, veh/h	541	1137	470	250	1381	618	220	898	532	238	886	376
Arrive On Green	0.05	0.15	0.15	0.08	0.39	0.00	0.07	0.25	0.25	0.05	0.24	0.00
Sat Flow, veh/h	3442	2443	1011	1774	3539	1583	1774	3539	1583	1774	3725	1583
Grp Volume(v), veh/h	676	626	600	203	1376	0	228	531	146	100	696	0
Grp Sat Flow(s),veh/h/ln	1721	1770	1684	1774	1770	1583	1774	1770	1583	1774	1863	1583
Q Serve(g_s), s	23.6	50.9	51.2	10.2	58.2	0.0	10.6	19.8	10.1	6.3	26.3	0.0
Cycle Q Clear(g_c), s	23.6	50.9	51.2	10.2	58.2	0.0	10.6	19.8	10.1	6.3	26.3	0.0
Prop In Lane	1.00		0.60	1.00		1.00	1.00		1.00	1.00		1.00
Lane Grp Cap(c), veh/h	541	824	784	250	1381	618	220	898	532	238	886	376
V/C Ratio(X)	1.25	0.76	0.77	0.81	1.00	0.00	1.04	0.59	0.27	0.42	0.79	0.00
Avail Cap(c_a), veh/h	541	824	784	271	1381	618	220	1062	605	249	1083	460
HCM Platoon Ratio	0.33	0.33	0.33	1.00	1.00	1.00	1.00	1.00	1.00	1.00	1.00	1.00
Upstream Filter(I)	0.91	0.91	0.91	0.81	0.81	0.00	1.00	1.00	1.00	1.00	1.00	0.00
Uniform Delay (d), s/veh	71.1	55.5	55.6	32.4	45.6	0.0	50.7	49.2	36.5	40.9	53.6	0.0
Incr Delay (d2), s/veh	125.4	6.0	6.4	13.3	21.0	0.0	70.3	0.6	0.3	1.2	3.2	0.0
Initial Q Delay(d3),s/veh	0.0	0.0	0.0	0.0	0.0	0.0	0.0	0.0	0.0	0.0	0.0	0.0
%ile BackOfQ(50%),veh/ln	20.7	26.3	25.4	5.9	32.5	0.0	8.2	9.7	4.5	3.2	13.9	0.0
LnGrp Delay(d),s/veh	196.5	61.5	62.1	45.7	66.6	0.0	121.0	49.8	36.7	42.1	56.8	0.0
LnGrp LOS	F	E	E	D	E		F	D	D	D	E	
Approach Vol, veh/h		1902			1579			905			796	
Approach Delay, s/veh		109.6			63.9			65.6			54.9	
Approach LOS		F			E			E			D	

Timer	1	2	3	4	5	6	7	8
Assigned Phs	1	2	3	4	5	6	7	8
Phs Duration (G+Y+Rc), s	17.7	75.2	16.0	41.1	29.0	63.9	13.6	43.4
Change Period (Y+Rc), s	5.4	5.4	5.4	5.4	5.4	5.4	5.4	5.4
Max Green Setting (Gmax), s	14.1	60.1	10.6	43.6	23.6	50.6	9.2	45.0
Max Q Clear Time (g_c+I1), s	12.2	53.2	12.6	28.3	25.6	60.2	8.3	21.8
Green Ext Time (p_c), s	0.1	6.2	0.0	7.4	0.0	0.0	0.0	9.1

Intersection Summary	
HCM 2010 Ctrl Delay	79.6
HCM 2010 LOS	E

Notes

User approved volume balancing among the lanes for turning movement.

Movement	EBL	EBT	EBR	WBL	WBT	WBR	NBL	NBT	NBR	SBL	SBT	SBR
Lane Configurations												
Traffic Volume (veh/h)	0	768	168	180	1162	0	0	0	0	363	20	296
Future Volume (veh/h)	0	768	168	180	1162	0	0	0	0	363	20	296
Number	5	2	12	1	6	16				7	4	14
Initial Q (Qb), veh	0	0	0	0	0	0				0	0	0
Ped-Bike Adj(A_pbT)	1.00		1.00	1.00		1.00				1.00		1.00
Parking Bus, Adj	1.00	1.00	1.00	1.00	1.00	1.00				1.00	1.00	1.00
Adj Sat Flow, veh/h/ln	0	1863	1863	1863	1863	0				1863	1863	1863
Adj Flow Rate, veh/h	0	914	0	225	1223	0				425	0	0
Adj No. of Lanes	0	2	1	1	2	0				2	0	1
Peak Hour Factor	1.00	0.84	0.92	0.80	0.95	1.00				0.91	0.56	0.90
Percent Heavy Veh, %	0	2	2	2	2	0				2	2	2
Cap, veh/h	0	2478	1109	565	2787	0				499	0	223
Arrive On Green	0.00	1.00	0.00	0.05	0.79	0.00				0.14	0.00	0.00
Sat Flow, veh/h	0	3632	1583	1774	3632	0				3548	0	1583
Grp Volume(v), veh/h	0	914	0	225	1223	0				425	0	0
Grp Sat Flow(s),veh/h/ln	0	1770	1583	1774	1770	0				1774	0	1583
Q Serve(g_s), s	0.0	0.0	0.0	5.1	16.8	0.0				17.5	0.0	0.0
Cycle Q Clear(g_c), s	0.0	0.0	0.0	5.1	16.8	0.0				17.5	0.0	0.0
Prop In Lane	0.00		1.00	1.00		0.00				1.00		1.00
Lane Grp Cap(c), veh/h	0	2478	1109	565	2787	0				499	0	223
V/C Ratio(X)	0.00	0.37	0.00	0.40	0.44	0.00				0.85	0.00	0.00
Avail Cap(c_a), veh/h	0	2478	1109	765	2787	0				1126	0	502
HCM Platoon Ratio	1.00	2.00	2.00	1.00	1.00	1.00				1.00	1.00	1.00
Upstream Filter(I)	0.00	0.53	0.00	0.87	0.87	0.00				1.00	0.00	0.00
Uniform Delay (d), s/veh	0.0	0.0	0.0	4.8	5.2	0.0				62.9	0.0	0.0
Incr Delay (d2), s/veh	0.0	0.2	0.0	0.4	0.4	0.0				4.2	0.0	0.0
Initial Q Delay(d3),s/veh	0.0	0.0	0.0	0.0	0.0	0.0				0.0	0.0	0.0
%ile BackOfQ(50%),veh/ln	0.0	0.1	0.0	2.5	8.3	0.0				8.9	0.0	0.0
LnGrp Delay(d),s/veh	0.0	0.2	0.0	5.2	5.6	0.0				67.1	0.0	0.0
LnGrp LOS		A		A	A					E		
Approach Vol, veh/h		914			1448						425	
Approach Delay, s/veh		0.2			5.6						67.1	
Approach LOS		A			A						E	

Timer	1	2	3	4	5	6	7	8
Assigned Phs	1	2		4		6		
Phs Duration (G+Y+Rc), s	13.1	110.4		26.5		123.5		
Change Period (Y+Rc), s	5.4	5.4		5.4		5.4		
Max Green Setting (Gmax), s	24.6	61.6		47.6		91.6		
Max Q Clear Time (g_c+I1), s	7.1	2.0		19.5		18.8		
Green Ext Time (p_c), s	0.6	26.9		1.6		28.8		

Intersection Summary	
HCM 2010 Ctrl Delay	13.2
HCM 2010 LOS	B

Notes

User approved volume balancing among the lanes for turning movement.

Movement	EBL	EBT	EBR	WBL	WBT	WBR	NBL	NBT	NBR	SBL	SBT	SBR
Lane Configurations												
Traffic Volume (veh/h)	150	952	0	0	1146	405	149	85	173	0	0	0
Future Volume (veh/h)	150	952	0	0	1146	405	149	85	173	0	0	0
Number	5	2	12	1	6	16	3	8	18			
Initial Q (Qb), veh	0	0	0	0	0	0	0	0	0			
Ped-Bike Adj(A_pbT)	1.00		1.00	1.00		1.00	1.00		1.00			
Parking Bus, Adj	1.00	1.00	1.00	1.00	1.00	1.00	1.00	1.00	1.00			
Adj Sat Flow, veh/h/ln	1863	1863	0	0	1863	1863	1900	1863	1863			
Adj Flow Rate, veh/h	172	1070	0	0	1206	0	173	100	0			
Adj No. of Lanes	1	2	0	0	2	1	0	2	1			
Peak Hour Factor	0.87	0.89	1.00	1.00	0.95	0.91	0.86	0.85	0.84			
Percent Heavy Veh, %	2	2	0	0	2	2	2	2	2			
Cap, veh/h	395	2870	0	0	2601	1164	208	207	185			
Arrive On Green	0.08	1.00	0.00	0.00	0.73	0.00	0.12	0.12	0.00			
Sat Flow, veh/h	1774	3632	0	0	3632	1583	1774	1770	1583			
Grp Volume(v), veh/h	172	1070	0	0	1206	0	173	100	0			
Grp Sat Flow(s),veh/h/ln	1774	1770	0	0	1770	1583	1774	1770	1583			
Q Serve(g_s), s	3.7	0.0	0.0	0.0	20.6	0.0	14.3	7.9	0.0			
Cycle Q Clear(g_c), s	3.7	0.0	0.0	0.0	20.6	0.0	14.3	7.9	0.0			
Prop In Lane	1.00		0.00	0.00		1.00	1.00		1.00			
Lane Grp Cap(c), veh/h	395	2870	0	0	2601	1164	208	207	185			
V/C Ratio(X)	0.44	0.37	0.00	0.00	0.46	0.00	0.83	0.48	0.00			
Avail Cap(c_a), veh/h	568	2870	0	0	2601	1164	350	349	312			
HCM Platoon Ratio	2.00	2.00	1.00	1.00	1.00	1.00	1.00	1.00	1.00			
Upstream Filter(I)	0.88	0.88	0.00	0.00	1.00	0.00	1.00	1.00	0.00			
Uniform Delay (d), s/veh	6.1	0.0	0.0	0.0	8.0	0.0	64.8	62.0	0.0			
Incr Delay (d2), s/veh	0.7	0.3	0.0	0.0	0.6	0.0	8.4	1.7	0.0			
Initial Q Delay(d3),s/veh	0.0	0.0	0.0	0.0	0.0	0.0	0.0	0.0	0.0			
%ile BackOfQ(50%),veh/ln	1.8	0.1	0.0	0.0	10.1	0.0	7.5	4.0	0.0			
LnGrp Delay(d),s/veh	6.8	0.3	0.0	0.0	8.6	0.0	73.2	63.7	0.0			
LnGrp LOS	A	A			A		E	E				
Approach Vol, veh/h		1242			1206			273				
Approach Delay, s/veh		1.2			8.6			69.8				
Approach LOS		A			A			E				

Timer	1	2	3	4	5	6	7	8
Assigned Phs		2			5	6		8
Phs Duration (G+Y+Rc), s		127.1			11.4	115.6		22.9
Change Period (Y+Rc), s		5.4			5.4	5.4		5.4
Max Green Setting (Gmax), s		109.6			20.6	83.6		29.6
Max Q Clear Time (g_c+I1), s		2.0			5.7	22.6		16.3
Green Ext Time (p_c), s		35.0			0.4	29.4		1.2

Intersection Summary	
HCM 2010 Ctrl Delay	11.4
HCM 2010 LOS	B

Notes

User approved ignoring U-Turning movement.

Movement	EBL	EBT	EBR	WBL	WBT	WBR	NBL	NBT	NBR	SBL	SBT	SBR
Lane Configurations												
Traffic Volume (veh/h)	84	695	264	216	1290	61	210	208	47	62	264	65
Future Volume (veh/h)	84	695	264	216	1290	61	210	208	47	62	264	65
Number	5	2	12	1	6	16	3	8	18	7	4	14
Initial Q (Qb), veh	0	0	0	0	0	0	0	0	0	0	0	0
Ped-Bike Adj(A_pbT)	1.00		1.00	1.00		1.00	1.00		1.00	1.00		1.00
Parking Bus, Adj	1.00	1.00	1.00	1.00	1.00	1.00	1.00	1.00	1.00	1.00	1.00	1.00
Adj Sat Flow, veh/h/ln	1863	1863	1900	1863	1863	1900	1863	1863	1863	1863	1863	1863
Adj Flow Rate, veh/h	100	764	307	225	1330	95	239	260	56	85	297	77
Adj No. of Lanes	1	2	0	1	2	0	1	1	1	1	1	1
Peak Hour Factor	0.84	0.91	0.86	0.96	0.97	0.64	0.88	0.80	0.84	0.73	0.89	0.84
Percent Heavy Veh, %	2	2	2	2	2	2	2	2	2	2	2	2
Cap, veh/h	194	1175	472	314	1719	123	287	480	533	270	337	352
Arrive On Green	0.04	0.48	0.48	0.08	0.51	0.51	0.12	0.26	0.26	0.04	0.18	0.18
Sat Flow, veh/h	1774	2467	991	1774	3351	239	1774	1863	1583	1774	1863	1583
Grp Volume(v), veh/h	100	548	523	225	701	724	239	260	56	85	297	77
Grp Sat Flow(s),veh/h/ln	1774	1770	1688	1774	1770	1821	1774	1863	1583	1774	1863	1583
Q Serve(g_s), s	4.3	35.2	35.3	9.4	47.9	48.3	16.0	18.1	3.6	5.9	23.3	6.0
Cycle Q Clear(g_c), s	4.3	35.2	35.3	9.4	47.9	48.3	16.0	18.1	3.6	5.9	23.3	6.0
Prop In Lane	1.00		0.59	1.00		0.13	1.00		1.00	1.00		1.00
Lane Grp Cap(c), veh/h	194	843	804	314	908	934	287	480	533	270	337	352
V/C Ratio(X)	0.52	0.65	0.65	0.72	0.77	0.78	0.83	0.54	0.11	0.31	0.88	0.22
Avail Cap(c_a), veh/h	233	843	804	418	908	934	293	530	575	270	380	389
HCM Platoon Ratio	1.00	1.00	1.00	1.00	1.00	1.00	1.00	1.00	1.00	1.00	1.00	1.00
Upstream Filter(I)	1.00	1.00	1.00	0.76	0.76	0.76	1.00	1.00	1.00	1.00	1.00	1.00
Uniform Delay (d), s/veh	26.8	29.8	29.8	24.1	29.4	29.5	43.4	48.0	34.2	47.6	59.9	47.6
Incr Delay (d2), s/veh	2.1	3.9	4.1	3.0	4.9	4.9	17.9	1.0	0.1	0.7	19.3	0.3
Initial Q Delay(d3),s/veh	0.0	0.0	0.0	0.0	0.0	0.0	0.0	0.0	0.0	0.0	0.0	0.0
%ile BackOfQ(50%),veh/ln	2.2	18.1	17.3	4.8	24.6	25.4	9.2	9.4	1.6	2.9	13.8	2.6
LnGrp Delay(d),s/veh	28.9	33.7	33.9	27.1	34.3	34.4	61.3	49.0	34.3	48.2	79.2	48.0
LnGrp LOS	C	C	C	C	C	C	E	D	C	D	E	D
Approach Vol, veh/h		1171			1650			555			459	
Approach Delay, s/veh		33.4			33.4			52.8			68.2	
Approach LOS		C			C			D			E	

Timer	1	2	3	4	5	6	7	8
Assigned Phs	1	2	3	4	5	6	7	8
Phs Duration (G+Y+Rc), s	17.2	76.8	23.5	32.5	11.7	82.4	11.9	44.1
Change Period (Y+Rc), s	5.4	5.4	5.4	5.4	5.4	5.4	5.4	5.4
Max Green Setting (Gmax), s	20.6	58.6	18.6	30.6	9.6	69.6	6.5	42.7
Max Q Clear Time (g_c+I1), s	11.4	37.3	18.0	25.3	6.3	50.3	7.9	20.1
Green Ext Time (p_c), s	0.4	16.0	0.0	1.8	0.1	14.8	0.0	3.9

Intersection Summary	
HCM 2010 Ctrl Delay	40.3
HCM 2010 LOS	D

Movement	EBL	EBT	WBT	WBR	SBL	SBR
Lane Configurations						
Traffic Volume (veh/h)	34	773	1557	77	189	62
Future Volume (veh/h)	34	773	1557	77	189	62
Number	5	2	6	16	7	14
Initial Q (Qb), veh	0	0	0	0	0	0
Ped-Bike Adj(A_pbT)	1.00			1.00	1.00	1.00
Parking Bus, Adj	1.00	1.00	1.00	1.00	1.00	1.00
Adj Sat Flow, veh/h/ln	1863	1863	1863	1900	1863	1863
Adj Flow Rate, veh/h	44	840	1573	92	230	84
Adj No. of Lanes	1	2	2	0	1	1
Peak Hour Factor	0.77	0.92	0.99	0.84	0.82	0.74
Percent Heavy Veh, %	2	2	2	2	2	2
Cap, veh/h	224	2768	2659	155	259	231
Arrive On Green	1.00	1.00	0.78	0.78	0.15	0.15
Sat Flow, veh/h	297	3632	3493	198	1774	1583
Grp Volume(v), veh/h	44	840	815	850	230	84
Grp Sat Flow(s),veh/h/ln	297	1770	1770	1828	1774	1583
Q Serve(g_s), s	6.6	0.0	27.9	28.4	19.1	7.2
Cycle Q Clear(g_c), s	35.1	0.0	27.9	28.4	19.1	7.2
Prop In Lane	1.00			0.11	1.00	1.00
Lane Grp Cap(c), veh/h	224	2768	1384	1429	259	231
V/C Ratio(X)	0.20	0.30	0.59	0.59	0.89	0.36
Avail Cap(c_a), veh/h	224	2768	1384	1429	421	376
HCM Platoon Ratio	2.00	2.00	1.00	1.00	1.00	1.00
Upstream Filter(I)	0.72	0.72	0.66	0.66	1.00	1.00
Uniform Delay (d), s/veh	4.2	0.0	6.6	6.7	62.8	57.8
Incr Delay (d2), s/veh	1.4	0.2	0.4	0.4	12.7	1.0
Initial Q Delay(d3),s/veh	0.0	0.0	0.0	0.0	0.0	0.0
%ile BackOfQ(50%),veh/ln	0.6	0.1	13.5	14.3	10.3	3.2
LnGrp Delay(d),s/veh	5.6	0.2	7.0	7.1	75.6	58.7
LnGrp LOS	A	A	A	A	E	E
Approach Vol, veh/h		884	1665		314	
Approach Delay, s/veh		0.5	7.1		71.1	
Approach LOS		A	A		E	

Timer	1	2	3	4	5	6	7	8
Assigned Phs		2		4		6		
Phs Duration (G+Y+Rc), s		122.7		27.3		122.7		
Change Period (Y+Rc), s		5.4		5.4		5.4		
Max Green Setting (Gmax), s		103.6		35.6		103.6		
Max Q Clear Time (g_c+I1), s		37.1		21.1		30.4		
Green Ext Time (p_c), s		37.5		0.8		39.4		

Intersection Summary	
HCM 2010 Ctrl Delay	12.1
HCM 2010 LOS	B

Movement	EBL	EBT	EBR	WBL	WBT	WBR	NBL	NBT	NBR	SBL	SBT	SBR
Lane Configurations												
Traffic Volume (veh/h)	224	568	11	10	1479	35	63	5	9	125	3	347
Future Volume (veh/h)	224	568	11	10	1479	35	63	5	9	125	3	347
Number	5	2	12	1	6	16	3	8	18	7	4	14
Initial Q (Qb), veh	0	0	0	0	0	0	0	0	0	0	0	0
Ped-Bike Adj(A_pbT)	1.00		1.00	1.00		1.00	1.00		1.00	1.00		1.00
Parking Bus, Adj	1.00	1.00	1.00	1.00	1.00	1.00	1.00	1.00	1.00	1.00	1.00	1.00
Adj Sat Flow, veh/h/ln	1863	1863	1900	1863	1863	1900	1900	1863	1863	1900	1863	1863
Adj Flow Rate, veh/h	257	631	16	12	1662	49	103	16	12	145	8	381
Adj No. of Lanes	1	2	0	1	2	0	0	1	1	0	1	1
Peak Hour Factor	0.87	0.90	0.69	0.83	0.89	0.71	0.61	0.31	0.75	0.86	0.38	0.91
Percent Heavy Veh, %	2	2	2	2	2	2	2	2	2	2	2	2
Cap, veh/h	283	2624	67	532	2177	64	298	43	291	305	14	431
Arrive On Green	0.09	0.74	0.74	0.62	0.62	0.62	0.18	0.18	0.18	0.18	0.18	0.18
Sat Flow, veh/h	1774	3527	89	781	3511	103	1378	231	1583	1404	77	1583
Grp Volume(v), veh/h	257	316	331	12	835	876	119	0	12	153	0	381
Grp Sat Flow(s),veh/h/ln	1774	1770	1847	781	1770	1845	1609	0	1583	1482	0	1583
Q Serve(g_s), s	10.7	8.4	8.4	0.9	51.0	51.5	0.0	0.0	0.9	4.6	0.0	27.6
Cycle Q Clear(g_c), s	10.7	8.4	8.4	0.9	51.0	51.5	8.8	0.0	0.9	13.3	0.0	27.6
Prop In Lane	1.00		0.05	1.00		0.06	0.87		1.00	0.95		1.00
Lane Grp Cap(c), veh/h	283	1317	1374	532	1097	1144	341	0	291	319	0	431
V/C Ratio(X)	0.91	0.24	0.24	0.02	0.76	0.77	0.35	0.00	0.04	0.48	0.00	0.88
Avail Cap(c_a), veh/h	418	1317	1374	532	1097	1144	341	0	291	319	0	431
HCM Platoon Ratio	1.00	1.00	1.00	1.00	1.00	1.00	1.00	1.00	1.00	1.00	1.00	1.00
Upstream Filter(I)	0.96	0.96	0.96	1.00	1.00	1.00	1.00	0.00	1.00	1.00	0.00	1.00
Uniform Delay (d), s/veh	37.7	6.0	6.0	11.0	20.5	20.6	53.5	0.0	50.3	55.2	0.0	52.3
Incr Delay (d2), s/veh	17.1	0.4	0.4	0.1	5.0	4.9	0.6	0.0	0.1	1.1	0.0	19.2
Initial Q Delay(d3),s/veh	0.0	0.0	0.0	0.0	0.0	0.0	0.0	0.0	0.0	0.0	0.0	0.0
%ile BackOfQ(50%),veh/ln	11.8	4.2	4.4	0.2	26.4	27.6	4.4	0.0	0.4	5.8	0.0	17.4
LnGrp Delay(d),s/veh	54.8	6.4	6.4	11.1	25.5	25.5	54.1	0.0	50.4	56.3	0.0	71.5
LnGrp LOS	D	A	A	B	C	C	D		D	E		E
Approach Vol, veh/h		904			1723			131			534	
Approach Delay, s/veh		20.2			25.4			53.8			67.1	
Approach LOS		C			C			D			E	

Timer	1	2	3	4	5	6	7	8
Assigned Phs		2		4	5	6		8
Phs Duration (G+Y+Rc), s		117.0		33.0	18.6	98.4		33.0
Change Period (Y+Rc), s		5.4		5.4	5.4	5.4		5.4
Max Green Setting (Gmax), s		111.6		27.6	24.6	81.6		27.6
Max Q Clear Time (g_c+I1), s		10.4		29.6	12.7	53.5		10.8
Green Ext Time (p_c), s		34.9		0.0	0.5	19.1		2.8

Intersection Summary	
HCM 2010 Ctrl Delay	31.9
HCM 2010 LOS	C

Movement	EBL	EBT	EBR	WBL	WBT	WBR	NBL	NBT	NBR	SBL	SBT	SBR
Lane Configurations												
Traffic Volume (veh/h)	324	166	257	261	296	29	292	1308	83	75	2596	406
Future Volume (veh/h)	324	166	257	261	296	29	292	1308	83	75	2596	406
Number	5	2	12	1	6	16	3	8	18	7	4	14
Initial Q (Qb), veh	0	0	0	0	0	0	0	0	0	0	0	0
Ped-Bike Adj(A_pbT)	1.00		1.00	1.00		1.00	1.00		1.00	1.00		1.00
Parking Bus, Adj	1.00	1.00	1.00	1.00	1.00	1.00	1.00	1.00	1.00	1.00	1.00	1.00
Adj Sat Flow, veh/h/ln	1863	1863	1863	1863	1863	1900	1863	1863	1900	1863	1863	1863
Adj Flow Rate, veh/h	364	195	0	226	443	41	324	1362	104	101	2853	489
Adj No. of Lanes	2	1	1	1	2	0	2	3	0	1	3	1
Peak Hour Factor	0.89	0.85	0.86	0.85	0.90	0.70	0.90	0.96	0.80	0.74	0.91	0.83
Percent Heavy Veh, %	2	2	2	2	2	2	2	2	2	2	2	2
Cap, veh/h	414	217	185	232	439	40	314	2723	208	221	2631	819
Arrive On Green	0.12	0.12	0.00	0.13	0.13	0.13	0.09	0.56	0.56	0.04	0.52	0.52
Sat Flow, veh/h	3548	1863	1583	1774	3361	310	3442	4820	368	1774	5085	1583
Grp Volume(v), veh/h	364	195	0	226	245	239	324	958	508	101	2853	489
Grp Sat Flow(s),veh/h/ln	1774	1863	1583	1774	1863	1808	1721	1695	1798	1774	1695	1583
Q Serve(g_s), s	15.1	15.5	0.0	19.0	19.6	19.6	13.7	25.7	25.7	4.6	77.6	32.4
Cycle Q Clear(g_c), s	15.1	15.5	0.0	19.0	19.6	19.6	13.7	25.7	25.7	4.6	77.6	32.4
Prop In Lane	1.00		1.00	1.00		0.17	1.00		0.20	1.00		1.00
Lane Grp Cap(c), veh/h	414	217	185	232	243	236	314	1915	1016	221	2631	819
V/C Ratio(X)	0.88	0.90	0.00	0.97	1.01	1.01	1.03	0.50	0.50	0.46	1.08	0.60
Avail Cap(c_a), veh/h	414	217	185	232	243	236	314	1915	1016	281	2631	819
HCM Platoon Ratio	1.00	1.00	1.00	1.00	1.00	1.00	1.00	1.00	1.00	1.00	1.00	1.00
Upstream Filter(I)	1.00	1.00	0.00	1.00	1.00	1.00	1.00	1.00	1.00	1.00	1.00	1.00
Uniform Delay (d), s/veh	65.2	65.4	0.0	65.0	65.2	65.2	68.2	19.8	19.8	23.9	36.2	25.3
Incr Delay (d2), s/veh	22.4	39.2	0.0	51.8	59.1	61.9	58.9	0.2	0.4	1.5	45.4	1.2
Initial Q Delay(d3),s/veh	0.0	0.0	0.0	0.0	0.0	0.1	0.0	0.0	0.0	0.0	0.0	0.0
%ile BackOfQ(50%),veh/ln	8.7	10.3	0.0	12.7	14.1	13.8	9.1	12.0	12.8	2.3	47.1	14.4
LnGrp Delay(d),s/veh	87.6	104.5	0.0	116.8	124.3	127.2	127.1	20.0	20.2	25.3	81.6	26.5
LnGrp LOS	F	F		F	F	F	F	B	C	C	F	C
Approach Vol, veh/h		559			710			1790			3443	
Approach Delay, s/veh		93.5			122.9			39.4			72.1	
Approach LOS		F			F			D			E	

Timer	1	2	3	4	5	6	7	8
Assigned Phs		2	3	4		6	7	8
Phs Duration (G+Y+Rc), s		22.9	19.1	83.0		25.0	12.0	90.1
Change Period (Y+Rc), s		5.4	5.4	5.4		5.4	5.4	5.4
Max Green Setting (Gmax), s		17.5	13.7	77.6		19.6	11.6	79.7
Max Q Clear Time (g_c+I1), s		17.5	15.7	79.6		21.6	6.6	27.7
Green Ext Time (p_c), s		0.0	0.0	0.0		0.0	0.1	18.1

Intersection Summary	
HCM 2010 Ctrl Delay	70.5
HCM 2010 LOS	E

Notes

User approved volume balancing among the lanes for turning movement.

Movement	EBL	EBT	EBR	WBL	WBT	WBR	NBL	NBT	NBR	SBL	SBT	SBR
Lane Configurations												
Traffic Volume (veh/h)	23	272	37	19	481	45	29	33	9	62	129	116
Future Volume (veh/h)	23	272	37	19	481	45	29	33	9	62	129	116
Number	5	2	12	1	6	16	3	8	18	7	4	14
Initial Q (Qb), veh	0	0	0	0	0	0	0	0	0	0	0	0
Ped-Bike Adj(A_pbT)	1.00		1.00	1.00		1.00	1.00		1.00	1.00		1.00
Parking Bus, Adj	1.00	1.00	1.00	1.00	1.00	1.00	1.00	1.00	1.00	1.00	1.00	1.00
Adj Sat Flow, veh/h/ln	1863	1863	1900	1863	1863	1900	1863	1863	1900	1863	1863	1900
Adj Flow Rate, veh/h	32	309	52	28	559	56	41	52	12	84	136	171
Adj No. of Lanes	1	1	0	1	1	0	1	1	0	1	1	0
Peak Hour Factor	0.72	0.88	0.71	0.68	0.86	0.80	0.70	0.63	0.75	0.74	0.95	0.68
Percent Heavy Veh, %	2	2	2	2	2	2	2	2	2	2	2	2
Cap, veh/h	246	637	107	423	678	68	217	290	67	428	162	204
Arrive On Green	0.03	0.41	0.41	0.03	0.41	0.41	0.04	0.20	0.20	0.06	0.22	0.22
Sat Flow, veh/h	1774	1555	262	1774	1666	167	1774	1465	338	1774	751	945
Grp Volume(v), veh/h	32	0	361	28	0	615	41	0	64	84	0	307
Grp Sat Flow(s),veh/h/ln	1774	0	1817	1774	0	1833	1774	0	1803	1774	0	1696
Q Serve(g_s), s	0.7	0.0	10.4	0.6	0.0	21.2	1.3	0.0	2.1	2.6	0.0	12.3
Cycle Q Clear(g_c), s	0.7	0.0	10.4	0.6	0.0	21.2	1.3	0.0	2.1	2.6	0.0	12.3
Prop In Lane	1.00		0.14	1.00		0.09	1.00		0.19	1.00		0.56
Lane Grp Cap(c), veh/h	246	0	745	423	0	746	217	0	357	428	0	367
V/C Ratio(X)	0.13	0.00	0.48	0.07	0.00	0.82	0.19	0.00	0.18	0.20	0.00	0.84
Avail Cap(c_a), veh/h	316	0	988	497	0	997	278	0	484	472	0	469
HCM Platoon Ratio	1.00	1.00	1.00	1.00	1.00	1.00	1.00	1.00	1.00	1.00	1.00	1.00
Upstream Filter(I)	1.00	0.00	1.00	1.00	0.00	1.00	1.00	0.00	1.00	1.00	0.00	1.00
Uniform Delay (d), s/veh	14.6	0.0	15.4	12.2	0.0	18.8	22.0	0.0	23.6	20.7	0.0	26.6
Incr Delay (d2), s/veh	0.2	0.0	0.5	0.1	0.0	4.3	0.4	0.0	0.2	0.2	0.0	10.2
Initial Q Delay(d3),s/veh	0.0	0.0	0.0	0.0	0.0	0.0	0.0	0.0	0.0	0.0	0.0	0.0
%ile BackOfQ(50%),veh/ln	0.4	0.0	5.2	0.3	0.0	11.5	0.6	0.0	1.1	1.3	0.0	6.7
LnGrp Delay(d),s/veh	14.9	0.0	15.9	12.2	0.0	23.1	22.4	0.0	23.8	20.9	0.0	36.7
LnGrp LOS	B		B	B		C	C		C	C		D
Approach Vol, veh/h		393			643			105			391	
Approach Delay, s/veh		15.8			22.6			23.3			33.3	
Approach LOS		B			C			C			C	

Timer	1	2	3	4	5	6	7	8
Assigned Phs	1	2	3	4	5	6	7	8
Phs Duration (G+Y+Rc), s	7.5	34.4	8.2	20.7	7.7	34.2	9.4	19.4
Change Period (Y+Rc), s	5.4	5.4	5.4	5.4	5.4	5.4	5.4	5.4
Max Green Setting (Gmax), s	5.1	38.5	5.2	19.6	5.1	38.5	5.8	19.0
Max Q Clear Time (g_c+I1), s	2.6	12.4	3.3	14.3	2.7	23.2	4.6	4.1
Green Ext Time (p_c), s	0.0	6.9	0.0	1.0	0.0	5.6	0.0	2.0

Intersection Summary	
HCM 2010 Ctrl Delay	23.6
HCM 2010 LOS	C

Movement	EBL	EBT	EBR	WBL	WBT	WBR	NBL	NBT	NBR	SBL	SBT	SBR
Lane Configurations												
Traffic Volume (veh/h)	32	280	63	332	430	21	55	174	29	32	493	69
Future Volume (veh/h)	32	280	63	332	430	21	55	174	29	32	493	69
Number	5	2	12	1	6	16	3	8	18	7	4	14
Initial Q (Qb), veh	0	0	0	0	0	0	0	0	0	0	0	0
Ped-Bike Adj(A_pbT)	1.00		1.00	1.00		1.00	1.00		1.00	1.00		1.00
Parking Bus, Adj	1.00	1.00	1.00	1.00	1.00	1.00	1.00	1.00	1.00	1.00	1.00	1.00
Adj Sat Flow, veh/h/ln	1863	1863	1900	1863	1863	1900	1863	1863	1900	1863	1863	1900
Adj Flow Rate, veh/h	40	326	95	382	524	30	64	200	36	48	560	84
Adj No. of Lanes	1	1	0	1	1	0	1	1	0	1	1	0
Peak Hour Factor	0.80	0.86	0.66	0.87	0.82	0.71	0.86	0.87	0.81	0.67	0.88	0.82
Percent Heavy Veh, %	2	2	2	2	2	2	2	2	2	2	2	2
Cap, veh/h	239	342	100	405	702	40	126	542	98	411	553	83
Arrive On Green	0.03	0.25	0.25	0.19	0.40	0.40	0.04	0.35	0.35	0.03	0.35	0.35
Sat Flow, veh/h	1774	1387	404	1774	1745	100	1774	1537	277	1774	1583	238
Grp Volume(v), veh/h	40	0	421	382	0	554	64	0	236	48	0	644
Grp Sat Flow(s),veh/h/ln	1774	0	1791	1774	0	1845	1774	0	1814	1774	0	1821
Q Serve(g_s), s	2.0	0.0	27.6	20.2	0.0	30.6	2.7	0.0	11.5	2.0	0.0	41.6
Cycle Q Clear(g_c), s	2.0	0.0	27.6	20.2	0.0	30.6	2.7	0.0	11.5	2.0	0.0	41.6
Prop In Lane	1.00		0.23	1.00		0.05	1.00		0.15	1.00		0.13
Lane Grp Cap(c), veh/h	239	0	442	405	0	742	126	0	639	411	0	636
V/C Ratio(X)	0.17	0.00	0.95	0.94	0.00	0.75	0.51	0.00	0.37	0.12	0.00	1.01
Avail Cap(c_a), veh/h	260	0	442	405	0	742	138	0	639	428	0	636
HCM Platoon Ratio	1.00	1.00	1.00	1.00	1.00	1.00	1.00	1.00	1.00	1.00	1.00	1.00
Upstream Filter(I)	1.00	0.00	1.00	1.00	0.00	1.00	1.00	0.00	1.00	1.00	0.00	1.00
Uniform Delay (d), s/veh	32.5	0.0	44.2	32.8	0.0	30.5	30.6	0.0	28.7	23.9	0.0	38.8
Incr Delay (d2), s/veh	0.3	0.0	31.0	30.4	0.0	4.2	3.2	0.0	0.4	0.1	0.0	39.1
Initial Q Delay(d3),s/veh	0.0	0.0	0.0	0.0	0.0	0.0	0.0	0.0	0.0	0.0	0.0	0.0
%ile BackOfQ(50%),veh/ln	1.0	0.0	17.5	15.7	0.0	16.4	1.4	0.0	5.8	1.0	0.0	27.7
LnGrp Delay(d),s/veh	32.8	0.0	75.2	63.2	0.0	34.6	33.7	0.0	29.1	24.0	0.0	77.9
LnGrp LOS	C		E	E		C	C		C	C		F
Approach Vol, veh/h		461			936			300			692	
Approach Delay, s/veh		71.5			46.3			30.1			74.1	
Approach LOS		E			D			C			E	

Timer	1	2	3	4	5	6	7	8
Assigned Phs	1	2	3	4	5	6	7	8
Phs Duration (G+Y+Rc), s	27.6	34.8	9.8	47.0	9.1	53.3	9.4	47.4
Change Period (Y+Rc), s	5.4	5.4	5.4	5.4	5.4	5.4	5.4	5.4
Max Green Setting (Gmax), s	22.2	29.4	5.2	41.6	5.1	46.5	5.1	41.7
Max Q Clear Time (g_c+I1), s	22.2	29.6	4.7	43.6	4.0	32.6	4.0	13.5
Green Ext Time (p_c), s	0.0	0.0	0.0	0.0	0.0	5.3	0.0	6.7

Intersection Summary	
HCM 2010 Ctrl Delay	57.2
HCM 2010 LOS	E

Movement	EBL	EBT	EBR	WBL	WBT	WBR	NBL	NBT	NBR	SBL	SBT	SBR
Lane Configurations												
Traffic Volume (veh/h)	55	76	17	3	322	119	18	20	7	208	144	552
Future Volume (veh/h)	55	76	17	3	322	119	18	20	7	208	144	552
Number	5	2	12	1	6	16	3	8	18	7	4	14
Initial Q (Qb), veh	0	0	0	0	0	0	0	0	0	0	0	0
Ped-Bike Adj(A_pbT)	1.00		1.00	1.00		1.00	1.00		1.00	1.00		1.00
Parking Bus, Adj	1.00	1.00	1.00	1.00	1.00	1.00	1.00	1.00	1.00	1.00	1.00	1.00
Adj Sat Flow, veh/h/ln	1863	1863	1900	1863	1863	1900	1863	1863	1900	1863	1863	1863
Adj Flow Rate, veh/h	77	141	28	4	383	157	24	24	9	229	178	627
Adj No. of Lanes	1	1	0	1	1	0	1	1	0	1	1	1
Peak Hour Factor	0.71	0.54	0.61	0.75	0.84	0.76	0.75	0.83	0.75	0.91	0.81	0.88
Percent Heavy Veh, %	2	2	2	2	2	2	2	2	2	2	2	2
Cap, veh/h	232	627	124	525	522	214	353	571	214	686	823	700
Arrive On Green	0.42	0.42	0.42	0.42	0.42	0.42	0.44	0.44	0.44	0.44	0.44	0.44
Sat Flow, veh/h	862	1510	300	1211	1257	515	674	1293	485	1370	1863	1583
Grp Volume(v), veh/h	77	0	169	4	0	540	24	0	33	229	178	627
Grp Sat Flow(s),veh/h/ln	862	0	1810	1211	0	1772	674	0	1777	1370	1863	1583
Q Serve(g_s), s	6.2	0.0	4.5	0.2	0.0	19.4	1.7	0.0	0.8	8.6	4.5	27.6
Cycle Q Clear(g_c), s	25.6	0.0	4.5	4.7	0.0	19.4	6.2	0.0	0.8	9.4	4.5	27.6
Prop In Lane	1.00		0.17	1.00		0.29	1.00		0.27	1.00		1.00
Lane Grp Cap(c), veh/h	232	0	751	525	0	735	353	0	785	686	823	700
V/C Ratio(X)	0.33	0.00	0.22	0.01	0.00	0.73	0.07	0.00	0.04	0.33	0.22	0.90
Avail Cap(c_a), veh/h	315	0	925	642	0	906	418	0	956	818	1002	851
HCM Platoon Ratio	1.00	1.00	1.00	1.00	1.00	1.00	1.00	1.00	1.00	1.00	1.00	1.00
Upstream Filter(I)	1.00	0.00	1.00	1.00	0.00	1.00	1.00	0.00	1.00	1.00	1.00	1.00
Uniform Delay (d), s/veh	29.3	0.0	14.2	15.8	0.0	18.6	14.9	0.0	12.0	14.7	13.0	19.5
Incr Delay (d2), s/veh	0.8	0.0	0.2	0.0	0.0	2.4	0.1	0.0	0.0	0.3	0.1	10.6
Initial Q Delay(d3),s/veh	0.0	0.0	0.0	0.0	0.0	0.0	0.0	0.0	0.0	0.0	0.0	0.0
%ile BackOfQ(50%),veh/ln	1.5	0.0	2.3	0.1	0.0	9.9	0.3	0.0	0.4	3.3	2.3	14.1
LnGrp Delay(d),s/veh	30.2	0.0	14.4	15.8	0.0	21.0	15.0	0.0	12.0	14.9	13.1	30.1
LnGrp LOS	C		B	B		C	B		B	B	B	C
Approach Vol, veh/h		246			544			57			1034	
Approach Delay, s/veh		19.3			21.0			13.3			23.8	
Approach LOS		B			C			B			C	

Timer	1	2	3	4	5	6	7	8
Assigned Phs		2		4		6		8
Phs Duration (G+Y+Rc), s		36.7		38.8		36.7		38.8
Change Period (Y+Rc), s		5.4		5.4		5.4		5.4
Max Green Setting (Gmax), s		38.6		40.6		38.6		40.6
Max Q Clear Time (g_c+I1), s		27.6		29.6		21.4		8.2
Green Ext Time (p_c), s		3.7		3.7		4.7		5.2

Intersection Summary	
HCM 2010 Ctrl Delay	22.1
HCM 2010 LOS	C

Movement	EBL	EBT	EBR	WBL	WBT	WBR	NBL	NBT	NBR	SBL	SBT	SBR
Lane Configurations												
Traffic Volume (veh/h)	61	52	184	100	130	4	142	437	29	2	501	126
Future Volume (veh/h)	61	52	184	100	130	4	142	437	29	2	501	126
Number	5	2	12	1	6	16	3	8	18	7	4	14
Initial Q (Qb), veh	0	0	0	0	0	0	0	0	0	0	0	0
Ped-Bike Adj(A_pbT)	1.00		1.00	1.00		1.00	1.00		1.00	1.00		1.00
Parking Bus, Adj	1.00	1.00	1.00	1.00	1.00	1.00	1.00	1.00	1.00	1.00	1.00	1.00
Adj Sat Flow, veh/h/ln	1863	1863	1900	1863	1863	1900	1863	1863	1900	1863	1863	1900
Adj Flow Rate, veh/h	90	65	214	120	160	12	197	497	44	4	626	140
Adj No. of Lanes	1	1	0	1	1	0	1	1	0	1	1	0
Peak Hour Factor	0.68	0.80	0.86	0.83	0.81	0.33	0.72	0.88	0.66	0.50	0.80	0.90
Percent Heavy Veh, %	2	2	2	2	2	2	2	2	2	2	2	2
Cap, veh/h	290	65	214	190	298	22	246	872	77	363	653	146
Arrive On Green	0.06	0.17	0.17	0.06	0.17	0.17	0.08	0.52	0.52	0.01	0.44	0.44
Sat Flow, veh/h	1774	382	1258	1774	1712	128	1774	1687	149	1774	1475	330
Grp Volume(v), veh/h	90	0	279	120	0	172	197	0	541	4	0	766
Grp Sat Flow(s),veh/h/ln	1774	0	1641	1774	0	1840	1774	0	1836	1774	0	1805
Q Serve(g_s), s	3.6	0.0	14.9	4.9	0.0	7.5	5.0	0.0	17.7	0.1	0.0	36.0
Cycle Q Clear(g_c), s	3.6	0.0	14.9	4.9	0.0	7.5	5.0	0.0	17.7	0.1	0.0	36.0
Prop In Lane	1.00		0.77	1.00		0.07	1.00		0.08	1.00		0.18
Lane Grp Cap(c), veh/h	290	0	279	190	0	320	246	0	950	363	0	798
V/C Ratio(X)	0.31	0.00	1.00	0.63	0.00	0.54	0.80	0.00	0.57	0.01	0.00	0.96
Avail Cap(c_a), veh/h	293	0	279	190	0	320	278	0	950	455	0	816
HCM Platoon Ratio	1.00	1.00	1.00	1.00	1.00	1.00	1.00	1.00	1.00	1.00	1.00	1.00
Upstream Filter(I)	1.00	0.00	1.00	1.00	0.00	1.00	1.00	0.00	1.00	1.00	0.00	1.00
Uniform Delay (d), s/veh	27.9	0.0	36.3	29.0	0.0	33.0	19.5	0.0	14.5	14.1	0.0	23.6
Incr Delay (d2), s/veh	0.6	0.0	53.6	6.6	0.0	1.8	13.8	0.0	0.8	0.0	0.0	21.9
Initial Q Delay(d3),s/veh	0.0	0.0	0.0	0.0	0.0	0.0	0.0	0.0	0.0	0.0	0.0	0.0
%ile BackOfQ(50%),veh/ln	1.8	0.0	10.8	2.7	0.0	3.9	3.4	0.0	9.1	0.1	0.0	22.7
LnGrp Delay(d),s/veh	28.5	0.0	89.9	35.7	0.0	34.7	33.3	0.0	15.3	14.1	0.0	45.5
LnGrp LOS	C		F	D		C	C		B	B		D
Approach Vol, veh/h		369			292			738			770	
Approach Delay, s/veh		74.9			35.1			20.1			45.4	
Approach LOS		E			D			C			D	

Timer	1	2	3	4	5	6	7	8
Assigned Phs	1	2	3	4	5	6	7	8
Phs Duration (G+Y+Rc), s	10.7	20.3	12.4	44.1	10.4	20.6	5.9	50.7
Change Period (Y+Rc), s	5.4	5.4	5.4	5.4	5.4	5.4	5.4	5.4
Max Green Setting (Gmax), s	5.3	14.9	8.6	39.6	5.1	15.1	5.0	43.2
Max Q Clear Time (g_c+I1), s	6.9	16.9	7.0	38.0	5.6	9.5	2.1	19.7
Green Ext Time (p_c), s	0.0	0.0	0.1	0.7	0.0	1.3	0.0	10.4

Intersection Summary	
HCM 2010 Ctrl Delay	40.4
HCM 2010 LOS	D

Movement	EBL	EBT	EBR	WBL	WBT	WBR	NBL	NBT	NBR	SBL	SBT	SBR
Lane Configurations												
Traffic Volume (veh/h)	20	770	110	70	1650	20	0	0	50	10	10	10
Future Volume (veh/h)	20	770	110	70	1650	20	0	0	50	10	10	10
Number	5	2	12	1	6	16	3	8	18	7	4	14
Initial Q (Qb), veh	0	0	0	0	0	0	0	0	0	0	0	0
Ped-Bike Adj(A_pbT)	1.00		1.00	1.00		1.00	1.00		1.00	1.00		1.00
Parking Bus, Adj	1.00	1.00	1.00	1.00	1.00	1.00	1.00	1.00	1.00	1.00	1.00	1.00
Adj Sat Flow, veh/h/ln	1863	1863	1900	1863	1863	1900	0	1863	1900	1900	1863	1863
Adj Flow Rate, veh/h	22	837	120	76	1793	22	0	0	54	11	11	11
Adj No. of Lanes	1	2	0	1	2	0	0	1	0	0	1	1
Peak Hour Factor	0.92	0.92	0.92	0.92	0.92	0.92	0.92	0.92	0.92	0.92	0.92	0.92
Percent Heavy Veh, %	2	2	2	2	2	2	0	2	2	2	2	2
Cap, veh/h	250	2740	393	530	2956	36	0	0	74	46	33	74
Arrive On Green	0.04	1.00	1.00	0.83	0.83	0.83	0.00	0.00	0.05	0.05	0.05	0.05
Sat Flow, veh/h	1774	3108	446	584	3581	44	0	0	1583	215	702	1583
Grp Volume(v), veh/h	22	477	480	76	885	930	0	0	54	22	0	11
Grp Sat Flow(s),veh/h/ln	1774	1770	1784	584	1770	1855	0	0	1583	917	0	1583
Q Serve(g_s), s	0.3	0.0	0.0	3.9	26.2	26.3	0.0	0.0	5.1	0.0	0.0	1.0
Cycle Q Clear(g_c), s	0.3	0.0	0.0	3.9	26.2	26.3	0.0	0.0	5.1	5.1	0.0	1.0
Prop In Lane	1.00		0.25	1.00		0.02	0.00		1.00	0.50		1.00
Lane Grp Cap(c), veh/h	250	1560	1573	530	1461	1531	0	0	74	79	0	74
V/C Ratio(X)	0.09	0.31	0.31	0.14	0.61	0.61	0.00	0.00	0.73	0.28	0.00	0.15
Avail Cap(c_a), veh/h	293	1560	1573	530	1461	1531	0	0	101	106	0	101
HCM Platoon Ratio	2.00	2.00	2.00	1.00	1.00	1.00	1.00	1.00	1.00	1.00	1.00	1.00
Upstream Filter(I)	0.93	0.93	0.93	0.50	0.50	0.50	0.00	0.00	1.00	1.00	0.00	1.00
Uniform Delay (d), s/veh	4.3	0.0	0.0	2.6	4.6	4.6	0.0	0.0	70.6	69.0	0.0	68.7
Incr Delay (d2), s/veh	0.1	0.5	0.5	0.3	0.9	0.9	0.0	0.0	15.9	1.9	0.0	0.9
Initial Q Delay(d3),s/veh	0.0	0.0	0.0	0.0	0.0	0.0	0.0	0.0	0.0	0.0	0.0	0.0
%ile BackOfQ(50%),veh/ln	0.2	0.2	0.2	0.7	12.9	13.6	0.0	0.0	2.5	0.9	0.0	0.9
LnGrp Delay(d),s/veh	4.5	0.5	0.5	2.9	5.5	5.5	0.0	0.0	86.5	70.9	0.0	69.6
LnGrp LOS	A	A	A	A	A	A			F	E		E
Approach Vol, veh/h		979			1891			54			33	
Approach Delay, s/veh		0.6			5.4			86.5			70.5	
Approach LOS		A			A			F			E	

Timer	1	2	3	4	5	6	7	8
Assigned Phs		2		4	5	6		8
Phs Duration (G+Y+Rc), s		137.6		12.4	8.4	129.2		12.4
Change Period (Y+Rc), s		5.4		5.4	5.4	5.4		5.4
Max Green Setting (Gmax), s		129.6		9.6	6.6	117.6		9.6
Max Q Clear Time (g_c+I1), s		2.0		7.1	2.3	28.3		7.1
Green Ext Time (p_c), s		58.2		0.1	0.0	49.9		0.1

Intersection Summary	
HCM 2010 Ctrl Delay	6.0
HCM 2010 LOS	A

Movement	EBL	EBT	EBR	WBL	WBT	WBR	NBL	NBT	NBR	SBL	SBT	SBR
Lane Configurations												
Traffic Volume (veh/h)	60	730	60	120	1460	80	170	120	110	60	10	10
Future Volume (veh/h)	60	730	60	120	1460	80	170	120	110	60	10	10
Number	5	2	12	1	6	16	3	8	18	7	4	14
Initial Q (Qb), veh	0	0	0	0	0	0	0	0	0	0	0	0
Ped-Bike Adj(A_pbT)	1.00		1.00	1.00		1.00	1.00		1.00	1.00		1.00
Parking Bus, Adj	1.00	1.00	1.00	1.00	1.00	1.00	1.00	1.00	1.00	1.00	1.00	1.00
Adj Sat Flow, veh/h/ln	1863	1863	1900	1863	1863	1900	1863	1863	1863	1863	1863	1863
Adj Flow Rate, veh/h	65	793	65	130	1587	87	185	130	120	65	11	11
Adj No. of Lanes	1	2	0	1	2	0	1	1	1	1	1	1
Peak Hour Factor	0.92	0.92	0.92	0.92	0.92	0.92	0.92	0.92	0.92	0.92	0.92	0.92
Percent Heavy Veh, %	2	2	2	2	2	2	2	2	2	2	2	2
Cap, veh/h	220	2230	183	545	2318	126	286	187	218	166	62	102
Arrive On Green	0.06	1.00	1.00	0.04	0.68	0.68	0.11	0.10	0.10	0.05	0.03	0.03
Sat Flow, veh/h	1774	3313	272	1774	3413	186	1774	1863	1583	1774	1863	1583
Grp Volume(v), veh/h	65	424	434	130	819	855	185	130	120	65	11	11
Grp Sat Flow(s),veh/h/ln	1774	1770	1815	1774	1770	1830	1774	1863	1583	1774	1863	1583
Q Serve(g_s), s	1.7	0.0	0.0	3.4	41.5	42.2	14.7	10.1	10.6	5.3	0.9	1.0
Cycle Q Clear(g_c), s	1.7	0.0	0.0	3.4	41.5	42.2	14.7	10.1	10.6	5.3	0.9	1.0
Prop In Lane	1.00		0.15	1.00		0.10	1.00		1.00	1.00		1.00
Lane Grp Cap(c), veh/h	220	1191	1222	545	1202	1242	286	187	218	166	62	102
V/C Ratio(X)	0.30	0.36	0.36	0.24	0.68	0.69	0.65	0.69	0.55	0.39	0.18	0.11
Avail Cap(c_a), veh/h	279	1191	1222	605	1202	1242	342	235	258	192	78	116
HCM Platoon Ratio	2.00	2.00	2.00	1.00	1.00	1.00	1.00	1.00	1.00	1.00	1.00	1.00
Upstream Filter(I)	0.91	0.91	0.91	0.77	0.77	0.77	1.00	1.00	1.00	1.00	1.00	1.00
Uniform Delay (d), s/veh	13.6	0.0	0.0	6.8	14.4	14.5	59.2	65.2	60.4	66.1	70.5	66.1
Incr Delay (d2), s/veh	0.7	0.8	0.7	0.2	2.4	2.4	3.2	6.2	2.2	1.5	1.3	0.5
Initial Q Delay(d3),s/veh	0.0	0.0	0.0	0.0	0.0	0.0	0.0	0.0	0.0	0.0	0.0	0.0
%ile BackOfQ(50%),veh/ln	0.9	0.3	0.3	1.7	20.8	22.0	7.4	5.6	4.8	2.6	0.5	0.4
LnGrp Delay(d),s/veh	14.3	0.8	0.7	7.0	16.8	16.9	62.4	71.5	62.5	67.6	71.8	66.6
LnGrp LOS	B	A	A	A	B	B	E	E	E	E	E	E
Approach Vol, veh/h		923			1804			435			87	
Approach Delay, s/veh		1.7			16.2			65.1			68.0	
Approach LOS		A			B			E			E	

Timer	1	2	3	4	5	6	7	8
Assigned Phs	1	2	3	4	5	6	7	8
Phs Duration (G+Y+Rc), s	10.9	106.4	22.3	10.4	10.1	107.2	12.2	20.5
Change Period (Y+Rc), s	5.4	5.4	5.4	5.4	5.4	5.4	5.4	5.4
Max Green Setting (Gmax), s	10.6	89.9	21.6	6.3	9.6	90.9	9.0	18.9
Max Q Clear Time (g_c+I1), s	5.4	2.0	16.7	3.0	3.7	44.2	7.3	12.6
Green Ext Time (p_c), s	0.1	37.8	0.2	0.4	0.0	28.2	0.0	0.6

Intersection Summary	
HCM 2010 Ctrl Delay	20.0
HCM 2010 LOS	B

Movement	EBL	EBT	WBT	WBR	SBL	SBR
Lane Configurations						
Traffic Volume (veh/h)	160	1400	2220	390	240	60
Future Volume (veh/h)	160	1400	2220	390	240	60
Number	5	2	6	16	7	14
Initial Q (Qb), veh	0	0	0	0	0	0
Ped-Bike Adj(A_pbT)	1.00			1.00	1.00	1.00
Parking Bus, Adj	1.00	1.00	1.00	1.00	1.00	1.00
Adj Sat Flow, veh/h/ln	1863	1863	1863	1900	1863	1863
Adj Flow Rate, veh/h	174	1522	2413	424	261	65
Adj No. of Lanes	1	3	3	0	2	1
Peak Hour Factor	0.92	0.92	0.92	0.92	0.92	0.92
Percent Heavy Veh, %	2	2	2	2	2	2
Cap, veh/h	196	4259	3239	542	312	143
Arrive On Green	0.13	1.00	0.74	0.74	0.09	0.09
Sat Flow, veh/h	1774	5253	4557	734	3442	1583
Grp Volume(v), veh/h	174	1522	1836	1001	261	65
Grp Sat Flow(s),veh/h/ln	1774	1695	1695	1733	1721	1583
Q Serve(g_s), s	7.2	0.0	46.4	53.7	11.2	5.8
Cycle Q Clear(g_c), s	7.2	0.0	46.4	53.7	11.2	5.8
Prop In Lane	1.00			0.42	1.00	1.00
Lane Grp Cap(c), veh/h	196	4259	2502	1279	312	143
V/C Ratio(X)	0.89	0.36	0.73	0.78	0.84	0.45
Avail Cap(c_a), veh/h	315	4259	2502	1279	381	175
HCM Platoon Ratio	2.00	2.00	1.00	1.00	1.00	1.00
Upstream Filter(I)	0.93	0.93	0.09	0.09	1.00	1.00
Uniform Delay (d), s/veh	43.6	0.0	11.2	12.2	67.1	64.7
Incr Delay (d2), s/veh	15.4	0.2	0.2	0.5	12.8	2.2
Initial Q Delay(d3),s/veh	0.0	0.0	0.0	0.0	0.0	0.0
%ile BackOfQ(50%),veh/ln	7.8	0.1	21.5	25.5	5.9	5.2
LnGrp Delay(d),s/veh	59.1	0.2	11.4	12.6	80.0	66.9
LnGrp LOS	E	A	B	B	E	E
Approach Vol, veh/h		1696	2837		326	
Approach Delay, s/veh		6.3	11.8		77.4	
Approach LOS		A	B		E	

Timer	1	2	3	4	5	6	7	8
Assigned Phs		2		4	5	6		
Phs Duration (G+Y+Rc), s		131.0		19.0	14.9	116.1		
Change Period (Y+Rc), s		5.4		5.4	5.4	5.4		
Max Green Setting (Gmax), s		122.6		16.6	19.6	97.6		
Max Q Clear Time (g_c+I1), s		2.0		13.2	9.2	55.7		
Green Ext Time (p_c), s		109.7		0.4	0.3	40.5		

Intersection Summary	
HCM 2010 Ctrl Delay	14.3
HCM 2010 LOS	B

Movement	EBT	EBR	WBL	WBT	NBL	NBR
Lane Configurations						
Traffic Volume (veh/h)	1400	60	50	2230	10	90
Future Volume (veh/h)	1400	60	50	2230	10	90
Number	2	12	1	6	3	18
Initial Q (Qb), veh	0	0	0	0	0	0
Ped-Bike Adj(A_pbT)		1.00	1.00		1.00	1.00
Parking Bus, Adj	1.00	1.00	1.00	1.00	1.00	1.00
Adj Sat Flow, veh/h/ln	1863	1900	1863	1863	1863	1863
Adj Flow Rate, veh/h	1522	65	54	2424	11	98
Adj No. of Lanes	3	0	1	3	1	2
Peak Hour Factor	0.92	0.92	0.92	0.92	0.92	0.92
Percent Heavy Veh, %	2	2	2	2	2	2
Cap, veh/h	4070	174	362	4473	86	135
Arrive On Green	1.00	1.00	0.03	0.88	0.05	0.05
Sat Flow, veh/h	5169	214	1774	5253	1774	2787
Grp Volume(v), veh/h	1032	555	54	2424	11	98
Grp Sat Flow(s),veh/h/ln	1695	1825	1774	1695	1774	1393
Q Serve(g_s), s	0.0	0.0	0.7	16.4	0.9	5.2
Cycle Q Clear(g_c), s	0.0	0.0	0.7	16.4	0.9	5.2
Prop In Lane		0.12	1.00		1.00	1.00
Lane Grp Cap(c), veh/h	2759	1485	362	4473	86	135
V/C Ratio(X)	0.37	0.37	0.15	0.54	0.13	0.73
Avail Cap(c_a), veh/h	2759	1485	434	4473	149	234
HCM Platoon Ratio	2.00	2.00	1.00	1.00	1.00	1.00
Upstream Filter(I)	0.92	0.92	0.48	0.48	1.00	1.00
Uniform Delay (d), s/veh	0.0	0.0	1.6	2.1	68.3	70.4
Incr Delay (d2), s/veh	0.4	0.7	0.1	0.2	0.7	7.3
Initial Q Delay(d3),s/veh	0.0	0.0	0.0	0.0	0.0	0.0
%ile BackOfQ(50%),veh/ln	0.1	0.3	0.3	7.5	0.5	2.1
LnGrp Delay(d),s/veh	0.4	0.7	1.7	2.3	69.0	77.7
LnGrp LOS	A	A	A	A	E	E
Approach Vol, veh/h	1587			2478	109	
Approach Delay, s/veh	0.5			2.3	76.8	
Approach LOS	A			A	E	

Timer	1	2	3	4	5	6	7	8
Assigned Phs	1	2				6		8
Phs Duration (G+Y+Rc), s	9.9	127.5				137.3		12.7
Change Period (Y+Rc), s	5.4	5.4				5.4		5.4
Max Green Setting (Gmax), s	10.6	110.6				126.6		12.6
Max Q Clear Time (g_c+I1), s	2.7	2.0				18.4		7.2
Green Ext Time (p_c), s	0.0	93.4				93.0		0.1

Intersection Summary	
HCM 2010 Ctrl Delay	3.5
HCM 2010 LOS	A

HCM 2010 analysis supports speed limit in the range of 25 and 55 mph

Movement	EBL	EBT	WBT	WBR	SBL	SBR
Lane Configurations						
Traffic Volume (veh/h)	130	1200	1990	110	60	40
Future Volume (veh/h)	130	1200	1990	110	60	40
Number	5	2	6	16	7	14
Initial Q (Qb), veh	0	0	0	0	0	0
Ped-Bike Adj(A_pbT)	1.00			1.00	1.00	1.00
Parking Bus, Adj	1.00	1.00	1.00	1.00	1.00	1.00
Adj Sat Flow, veh/h/ln	1863	1863	1863	1900	1863	1863
Adj Flow Rate, veh/h	141	1304	2163	120	65	43
Adj No. of Lanes	1	3	3	0	1	1
Peak Hour Factor	0.92	0.92	0.92	0.92	0.92	0.92
Percent Heavy Veh, %	2	2	2	2	2	2
Cap, veh/h	214	4466	3990	220	88	79
Arrive On Green	0.03	0.88	0.81	0.81	0.05	0.05
Sat Flow, veh/h	1774	5253	5100	272	1774	1583
Grp Volume(v), veh/h	141	1304	1483	800	65	43
Grp Sat Flow(s),veh/h/ln	1774	1695	1695	1815	1774	1583
Q Serve(g_s), s	1.9	6.3	22.3	22.6	5.4	4.0
Cycle Q Clear(g_c), s	1.9	6.3	22.3	22.6	5.4	4.0
Prop In Lane	1.00			0.15	1.00	1.00
Lane Grp Cap(c), veh/h	214	4466	2743	1468	88	79
V/C Ratio(X)	0.66	0.29	0.54	0.55	0.74	0.55
Avail Cap(c_a), veh/h	410	4466	2743	1468	173	154
HCM Platoon Ratio	1.00	1.00	1.00	1.00	1.00	1.00
Upstream Filter(I)	1.00	1.00	0.73	0.73	1.00	1.00
Uniform Delay (d), s/veh	15.0	1.5	4.9	4.9	70.3	69.6
Incr Delay (d2), s/veh	3.4	0.2	0.2	0.3	11.2	5.8
Initial Q Delay(d3),s/veh	0.0	0.0	0.0	0.0	0.0	0.0
%ile BackOfQ(50%),veh/ln	5.0	3.0	10.4	11.2	2.9	3.6
LnGrp Delay(d),s/veh	18.5	1.7	5.0	5.2	81.5	75.4
LnGrp LOS	B	A	A	A	F	E
Approach Vol, veh/h		1445	2283		108	
Approach Delay, s/veh		3.3	5.1		79.1	
Approach LOS		A	A		E	

Timer	1	2	3	4	5	6	7	8
Assigned Phs		2		4	5	6		
Phs Duration (G+Y+Rc), s		137.1		12.9	10.4	126.7		
Change Period (Y+Rc), s		5.4		5.4	5.4	5.4		
Max Green Setting (Gmax), s		124.6		14.6	21.6	97.6		
Max Q Clear Time (g_c+I1), s		8.3		7.4	3.9	24.6		
Green Ext Time (p_c), s		86.4		0.1	0.3	60.2		

Intersection Summary	
HCM 2010 Ctrl Delay	6.5
HCM 2010 LOS	A

Movement	EBL	EBT	EBR	WBL	WBT	WBR	NBL	NBT	NBR	SBL	SBT	SBR
Lane Configurations												
Traffic Volume (veh/h)	70	570	70	170	1000	170	80	0	120	140	0	60
Future Volume (veh/h)	70	570	70	170	1000	170	80	0	120	140	0	60
Number	5	2	12	1	6	16	3	8	18	7	4	14
Initial Q (Qb), veh	0	0	0	0	0	0	0	0	0	0	0	0
Ped-Bike Adj(A_pbT)	1.00		1.00	1.00		1.00	1.00		1.00	1.00		1.00
Parking Bus, Adj	1.00	1.00	1.00	1.00	1.00	1.00	1.00	1.00	1.00	1.00	1.00	1.00
Adj Sat Flow, veh/h/ln	1863	1863	1900	1863	1863	1900	1900	1863	1900	1900	1863	1863
Adj Flow Rate, veh/h	76	620	76	185	1087	185	87	0	130	152	0	65
Adj No. of Lanes	1	2	0	1	2	0	0	2	0	0	1	1
Peak Hour Factor	0.92	0.92	0.92	0.92	0.92	0.92	0.92	0.92	0.92	0.92	0.92	0.92
Percent Heavy Veh, %	2	2	2	2	2	2	2	2	2	2	2	2
Cap, veh/h	264	1808	221	576	1804	306	154	0	381	288	0	418
Arrive On Green	0.06	1.00	1.00	0.06	0.60	0.60	0.26	0.00	0.26	0.26	0.00	0.26
Sat Flow, veh/h	1774	3175	389	1774	3028	514	403	0	1441	908	0	1583
Grp Volume(v), veh/h	76	345	351	185	634	638	87	0	130	152	0	65
Grp Sat Flow(s),veh/h/ln	1774	1770	1794	1774	1770	1772	403	0	1441	908	0	1583
Q Serve(g_s), s	2.7	0.0	0.0	6.4	33.9	34.1	9.7	0.0	10.9	16.7	0.0	4.7
Cycle Q Clear(g_c), s	2.7	0.0	0.0	6.4	33.9	34.1	37.3	0.0	10.9	27.7	0.0	4.7
Prop In Lane	1.00		0.22	1.00		0.29	1.00		1.00	1.00		1.00
Lane Grp Cap(c), veh/h	264	1008	1022	576	1054	1056	154	0	381	288	0	418
V/C Ratio(X)	0.29	0.34	0.34	0.32	0.60	0.60	0.56	0.00	0.34	0.53	0.00	0.16
Avail Cap(c_a), veh/h	345	1008	1022	693	1054	1056	163	0	390	296	0	429
HCM Platoon Ratio	2.00	2.00	2.00	1.00	1.00	1.00	1.00	1.00	1.00	1.00	1.00	1.00
Upstream Filter(I)	0.96	0.96	0.96	0.09	0.09	0.09	1.00	0.00	1.00	1.00	0.00	1.00
Uniform Delay (d), s/veh	15.6	0.0	0.0	11.4	19.1	19.1	67.9	0.0	44.6	55.8	0.0	42.3
Incr Delay (d2), s/veh	0.6	0.9	0.9	0.0	0.2	0.2	4.0	0.0	0.5	1.6	0.0	0.2
Initial Q Delay(d3),s/veh	0.0	0.0	0.0	0.0	0.0	0.0	0.0	0.0	0.0	0.0	0.0	0.0
%ile BackOfQ(50%),veh/ln	1.3	0.2	0.2	3.1	16.6	16.7	3.7	0.0	4.4	5.9	0.0	2.1
LnGrp Delay(d),s/veh	16.1	0.9	0.9	11.4	19.3	19.4	71.9	0.0	45.2	57.5	0.0	42.5
LnGrp LOS	B	A	A	B	B	B	E		D	E		D
Approach Vol, veh/h		772			1457			217			217	
Approach Delay, s/veh		2.4			18.3			55.9			53.0	
Approach LOS		A			B			E			D	

Timer	1	2	3	4	5	6	7	8
Assigned Phs	1	2		4	5	6		8
Phs Duration (G+Y+Rc), s	14.2	90.8		45.0	10.2	94.8		45.0
Change Period (Y+Rc), s	5.4	5.4		5.4	5.4	5.4		5.4
Max Green Setting (Gmax), s	18.6	74.6		40.6	11.6	81.6		40.6
Max Q Clear Time (g_c+I1), s	8.4	2.0		29.7	4.7	36.1		39.3
Green Ext Time (p_c), s	0.3	21.8		1.9	0.1	19.2		0.3

Intersection Summary	
HCM 2010 Ctrl Delay	19.6
HCM 2010 LOS	B

Movement	EBL	EBT	EBR	WBL	WBT	WBR	NBL	NBT	NBR	SBL	SBT	SBR
Lane Configurations												
Traffic Volume (veh/h)	60	480	60	160	760	160	20	80	100	100	80	20
Future Volume (veh/h)	60	480	60	160	760	160	20	80	100	100	80	20
Number	5	2	12	1	6	16	3	8	18	7	4	14
Initial Q (Qb), veh	0	0	0	0	0	0	0	0	0	0	0	0
Ped-Bike Adj(A_pbT)	1.00		1.00	1.00		1.00	1.00		1.00	1.00		1.00
Parking Bus, Adj	1.00	1.00	1.00	1.00	1.00	1.00	1.00	1.00	1.00	1.00	1.00	1.00
Adj Sat Flow, veh/h/ln	1863	1863	1900	1863	1863	1900	1863	1863	1900	1863	1863	1900
Adj Flow Rate, veh/h	65	522	65	174	826	174	22	87	109	109	87	22
Adj No. of Lanes	1	2	0	1	2	0	1	1	0	1	1	0
Peak Hour Factor	0.92	0.92	0.92	0.92	0.92	0.92	0.92	0.92	0.92	0.92	0.92	0.92
Percent Heavy Veh, %	2	2	2	2	2	2	2	2	2	2	2	2
Cap, veh/h	370	1909	237	604	1817	383	247	102	128	190	259	66
Arrive On Green	0.04	0.80	0.80	0.05	0.62	0.62	0.02	0.14	0.14	0.06	0.18	0.18
Sat Flow, veh/h	1774	3170	393	1774	2911	613	1774	753	943	1774	1436	363
Grp Volume(v), veh/h	65	291	296	174	502	498	22	0	196	109	0	109
Grp Sat Flow(s),veh/h/ln	1774	1770	1793	1774	1770	1755	1774	0	1696	1774	0	1799
Q Serve(g_s), s	2.1	6.3	6.3	5.6	22.3	22.3	1.6	0.0	16.9	7.7	0.0	7.9
Cycle Q Clear(g_c), s	2.1	6.3	6.3	5.6	22.3	22.3	1.6	0.0	16.9	7.7	0.0	7.9
Prop In Lane	1.00		0.22	1.00		0.35	1.00		0.56	1.00		0.20
Lane Grp Cap(c), veh/h	370	1066	1080	604	1105	1095	247	0	231	190	0	325
V/C Ratio(X)	0.18	0.27	0.27	0.29	0.45	0.45	0.09	0.00	0.85	0.57	0.00	0.34
Avail Cap(c_a), veh/h	428	1066	1080	742	1105	1095	290	0	369	236	0	475
HCM Platoon Ratio	1.33	1.33	1.33	1.00	1.00	1.00	1.00	1.00	1.00	1.00	1.00	1.00
Upstream Filter(I)	0.98	0.98	0.98	0.83	0.83	0.83	1.00	0.00	1.00	1.00	0.00	1.00
Uniform Delay (d), s/veh	11.7	6.6	6.6	10.0	14.8	14.8	54.1	0.0	63.3	50.7	0.0	53.6
Incr Delay (d2), s/veh	0.2	0.6	0.6	0.2	1.1	1.1	0.2	0.0	10.2	2.7	0.0	0.6
Initial Q Delay(d3),s/veh	0.0	0.0	0.0	0.0	0.0	0.0	0.0	0.0	0.0	0.0	0.0	0.0
%ile BackOfQ(50%),veh/ln	1.0	3.2	3.2	2.7	11.2	11.1	0.8	0.0	8.6	3.9	0.0	4.0
LnGrp Delay(d),s/veh	11.9	7.2	7.2	10.3	15.9	15.9	54.3	0.0	73.5	53.4	0.0	54.2
LnGrp LOS	B	A	A	B	B	B	D		E	D		D
Approach Vol, veh/h		652			1174			218			218	
Approach Delay, s/veh		7.6			15.1			71.5			53.8	
Approach LOS		A			B			E			D	

Timer	1	2	3	4	5	6	7	8
Assigned Phs	1	2	3	4	5	6	7	8
Phs Duration (G+Y+Rc), s	13.4	95.8	8.4	32.5	10.1	99.0	15.1	25.8
Change Period (Y+Rc), s	5.4	5.4	5.4	5.4	5.4	5.4	5.4	5.4
Max Green Setting (Gmax), s	19.6	62.6	6.6	39.6	9.6	72.6	13.6	32.6
Max Q Clear Time (g_c+I1), s	7.6	8.3	3.6	9.9	4.1	24.3	9.7	18.9
Green Ext Time (p_c), s	0.3	13.8	0.0	1.9	0.0	13.5	0.1	1.5

Intersection Summary	
HCM 2010 Ctrl Delay	22.1
HCM 2010 LOS	C

Movement	EBT	EBR	WBL	WBT	NBL	NBR
Lane Configurations						
Traffic Volume (veh/h)	490	120	190	570	50	80
Future Volume (veh/h)	490	120	190	570	50	80
Number	2	12	1	6	3	18
Initial Q (Qb), veh	0	0	0	0	0	0
Ped-Bike Adj(A_pbT)		1.00	1.00		1.00	1.00
Parking Bus, Adj	1.00	1.00	1.00	1.00	1.00	1.00
Adj Sat Flow, veh/h/ln	1863	1900	1863	1863	1863	1863
Adj Flow Rate, veh/h	533	130	207	620	54	87
Adj No. of Lanes	2	0	1	2	1	1
Peak Hour Factor	0.92	0.92	0.92	0.92	0.92	0.92
Percent Heavy Veh, %	2	2	2	2	2	2
Cap, veh/h	2222	540	683	3047	119	167
Arrive On Green	0.79	0.79	0.04	0.86	0.07	0.07
Sat Flow, veh/h	2918	686	1774	3632	1774	1583
Grp Volume(v), veh/h	333	330	207	620	54	87
Grp Sat Flow(s),veh/h/ln	1770	1742	1774	1770	1774	1583
Q Serve(g_s), s	7.4	7.5	3.2	4.4	4.4	7.8
Cycle Q Clear(g_c), s	7.4	7.5	3.2	4.4	4.4	7.8
Prop In Lane		0.39	1.00		1.00	1.00
Lane Grp Cap(c), veh/h	1392	1370	683	3047	119	167
V/C Ratio(X)	0.24	0.24	0.30	0.20	0.45	0.52
Avail Cap(c_a), veh/h	1392	1370	1059	3047	267	300
HCM Platoon Ratio	1.00	1.00	1.00	1.00	1.00	1.00
Upstream Filter(I)	1.00	1.00	0.88	0.88	1.00	1.00
Uniform Delay (d), s/veh	4.2	4.2	2.6	1.8	67.3	63.5
Incr Delay (d2), s/veh	0.4	0.4	0.2	0.0	2.7	2.5
Initial Q Delay(d3),s/veh	0.0	0.0	0.0	0.0	0.0	0.0
%ile BackOfQ(50%),veh/ln	3.8	3.7	1.5	2.2	2.2	3.5
LnGrp Delay(d),s/veh	4.6	4.6	2.8	1.8	70.0	66.0
LnGrp LOS	A	A	A	A	E	E
Approach Vol, veh/h	663			827	141	
Approach Delay, s/veh	4.6			2.1	67.5	
Approach LOS	A			A	E	

Timer	1	2	3	4	5	6	7	8
Assigned Phs	1	2				6		8
Phs Duration (G+Y+Rc), s	11.2	123.4				134.5		15.5
Change Period (Y+Rc), s	5.4	5.4				5.4		5.4
Max Green Setting (Gmax), s	37.6	73.6				116.6		22.6
Max Q Clear Time (g_c+I1), s	5.2	9.5				6.4		9.8
Green Ext Time (p_c), s	0.6	10.5				10.6		0.3

Intersection Summary	
HCM 2010 Ctrl Delay	8.8
HCM 2010 LOS	A

Movement	EBL	EBT	EBR	WBL	WBT	WBR	NBL	NBT	NBR	SBL	SBT	SBR
Lane Configurations												
Traffic Volume (veh/h)	60	460	60	70	450	70	100	80	20	100	80	20
Future Volume (veh/h)	60	460	60	70	450	70	100	80	20	100	80	20
Number	5	2	12	1	6	16	3	8	18	7	4	14
Initial Q (Qb), veh	0	0	0	0	0	0	0	0	0	0	0	0
Ped-Bike Adj(A_pbT)	1.00		1.00	1.00		1.00	1.00		1.00	1.00		1.00
Parking Bus, Adj	1.00	1.00	1.00	1.00	1.00	1.00	1.00	1.00	1.00	1.00	1.00	1.00
Adj Sat Flow, veh/h/ln	1863	1863	1900	1863	1863	1900	1863	1863	1900	1863	1863	1900
Adj Flow Rate, veh/h	65	500	65	76	489	76	109	87	22	109	87	22
Adj No. of Lanes	1	1	0	1	1	0	1	1	0	1	1	0
Peak Hour Factor	0.92	0.92	0.92	0.92	0.92	0.92	0.92	0.92	0.92	0.92	0.92	0.92
Percent Heavy Veh, %	2	2	2	2	2	2	2	2	2	2	2	2
Cap, veh/h	449	882	115	450	859	134	367	304	77	367	304	77
Arrive On Green	0.55	0.55	0.55	0.55	0.55	0.55	0.21	0.21	0.21	0.21	0.21	0.21
Sat Flow, veh/h	842	1616	210	842	1575	245	1279	1436	363	1279	1436	363
Grp Volume(v), veh/h	65	0	565	76	0	565	109	0	109	109	0	109
Grp Sat Flow(s),veh/h/ln	842	0	1826	842	0	1820	1279	0	1799	1279	0	1799
Q Serve(g_s), s	2.5	0.0	9.1	2.9	0.0	9.1	3.5	0.0	2.3	3.5	0.0	2.3
Cycle Q Clear(g_c), s	11.6	0.0	9.1	12.0	0.0	9.1	5.7	0.0	2.3	5.7	0.0	2.3
Prop In Lane	1.00		0.12	1.00		0.13	1.00		0.20	1.00		0.20
Lane Grp Cap(c), veh/h	449	0	996	450	0	993	367	0	381	367	0	381
V/C Ratio(X)	0.14	0.00	0.57	0.17	0.00	0.57	0.30	0.00	0.29	0.30	0.00	0.29
Avail Cap(c_a), veh/h	1061	0	2322	1062	0	2314	746	0	913	746	0	913
HCM Platoon Ratio	1.00	1.00	1.00	1.00	1.00	1.00	1.00	1.00	1.00	1.00	1.00	1.00
Upstream Filter(I)	1.00	0.00	1.00	1.00	0.00	1.00	1.00	0.00	1.00	1.00	0.00	1.00
Uniform Delay (d), s/veh	10.5	0.0	6.6	10.6	0.0	6.7	17.1	0.0	14.7	17.1	0.0	14.7
Incr Delay (d2), s/veh	0.1	0.0	0.5	0.2	0.0	0.5	0.4	0.0	0.4	0.4	0.0	0.4
Initial Q Delay(d3),s/veh	0.0	0.0	0.0	0.0	0.0	0.0	0.0	0.0	0.0	0.0	0.0	0.0
%ile BackOfQ(50%),veh/ln	0.6	0.0	4.5	0.7	0.0	4.5	1.3	0.0	1.2	1.3	0.0	1.2
LnGrp Delay(d),s/veh	10.6	0.0	7.2	10.8	0.0	7.2	17.6	0.0	15.1	17.6	0.0	15.1
LnGrp LOS	B		A	B		A	B		B	B		B
Approach Vol, veh/h		630			641			218			218	
Approach Delay, s/veh		7.5			7.6			16.4			16.4	
Approach LOS		A			A			B			B	

Timer	1	2	3	4	5	6	7	8
Assigned Phs		2		4		6		8
Phs Duration (G+Y+Rc), s		29.7		14.8		29.7		14.8
Change Period (Y+Rc), s		5.4		5.4		5.4		5.4
Max Green Setting (Gmax), s		56.6		22.6		56.6		22.6
Max Q Clear Time (g_c+I1), s		13.6		7.7		14.0		7.7
Green Ext Time (p_c), s		10.3		1.7		10.3		1.7

Intersection Summary	
HCM 2010 Ctrl Delay	9.8
HCM 2010 LOS	A

Appendix C: Crash Analysis Report

Table of Contents

1.0 Introduction 1
2.0 Segment Crash Analysis 3
3.0 Study Segment Field Observations 4
4.0 Identification of Clusters Along the Segment 4
4.1 SW 152 Street at SW 825/SW 137 Avenue 5
4.2 SW 152 Street at SW 122 Avenue 7
4.3 SW 152 Street at SW 117 Avenue 8
4.4 SR 992/SW 152 Street at SW 93 Avenue 10
4.5 SR 992/SW 152 Street at SR 5/South Dixie Highway 11
5.0 Study Segment Recommendations 13

List of Figures

Figure 1: Proposed Project Site 2
Figure 2: Crash Summary by Type 3
Figure 3: Crash Distribution Along Study Segment 4

List of Tables

Table 1: Crash Statistics Summary 3
Table 2: Crash Summary – SW 152 Street/Coral Reef Drive at SW 137 Avenue/SR 825 6
Table 3: Summary of Findings and Recommendations 6
Table 4: Crash Summary – SW 152 Street/Coral Reef Drive at SW 122 Avenue 7
Table 5: Summary of Findings and Recommendations 8
Table 6: Crash Summary – SW 152 Street/Coral Reef Drive at SW 117 Avenue 9
Table 7: Summary of Findings and Recommendations 9
Table 8: Crash Summary – SR 992/SW 152 Street at SW 93 Avenue 10
Table 9: Summary of Findings and Recommendations 11
Table 10: Crash Summary – SR 992/SW 152 Street at SR 5/US 1 12
Table 11: Summary of Findings and Recommendations 12

List of Appendix

Appendix A. Segment Crash Summary

Appendix B. Field Review Photographs

Appendix C. Crash Summary - Intersections

1.0 Introduction

The study segment of SW 152 Street/Coral Reef Drive segment begins at SW 172 Avenue and ends at SW 67Avenue with an approximately length of 8.3 miles. The study segment is located in south Miami-Dade County and runs in the east-west direction. SW 152 Street/Coral Reef Drive is a State Road (SR) between the Florida's Turnpike and South Dixie Highway/SR 5/US 1. The location of the study segment is depicted in Figure 1.

SW 152 Street/Coral Reef Drive within the study limits is divided in three sub-segments. The description of each sub-segment is as follows:

Sub-Segment 1: From SW 172 Avenue to the Florida's Turnpike is an urban two-lane undivided facility with a posted speed limit of 40 mph. This section is under the jurisdiction of Miami-Dade County.

Sub-Segment 2: From the Florida's Turnpike to South Dixie Highway/SR 5/US 1 is an urban State Road (SR 992/Section 87039000 MP: 0.000 to MP 2.462) classified as a principal arterial with two lanes in each direction separated by a raised median with a posted speed limit of 45 mph.

Sub-Segment 3: From South Dixie Highway/SR 5/US 1 to SW 67 Avenue is an urban two-lane undivided facility with a posted speed limit of 35 mph. This section is under the jurisdiction of Miami-Dade County.

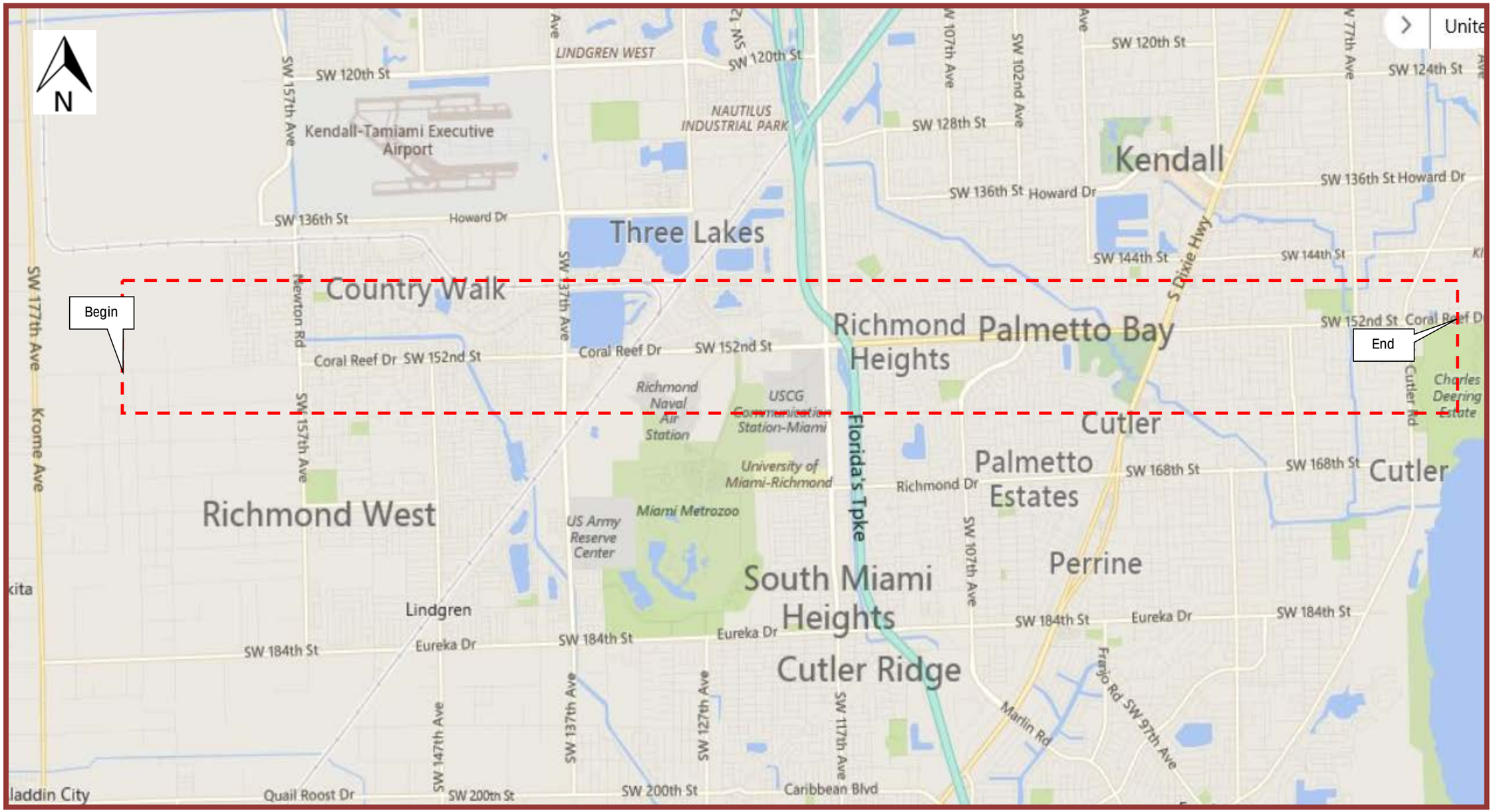

Figure 1: Proposed Project Site

2.0 Segment Crash Analysis

A generalized analysis of historical crash data was performed for SW 152 Street/Coral Reef Drive from SW 172 Avenue to SW 67 Avenue. Crash data from the latest available five-year period from January 2011 to December 2015 was analyzed. The data was extracted from the Signal Four Analytics database, which is an interactive, web-based system developed by the University of Florida.

Using the crash data obtained from Signal Four Analytics database, crash summaries were developed for the five-year analysis period. Review of the crash summaries provides insight into the historical crash patterns along the study segment. Based on the crash data reviewed, a total of 2,786 crashes were documented along the study roadway segment during the referenced study period. A total of 280 crashes were reported in 2011, 393 crashes in 2012, 621 crashes in 2013, 774 crashes in 2014, and 718 crashes in 2015. The crash summaries are included in Appendix A.

Based on crash severity, of the 2,786 crashes reported, 613 (22%) were injury type crashes, 2,163 (77.6%) were property damage only crashes and 10 (0.4%) were fatal crashes. There were a total of 623 (22%) night/dusk/dawn crashes reported which is lower than the statewide average for all roadways of 30 percent. A total of 345 (12.4%) of the total crashes reported occurred under wet/slippery pavement conditions which is lower than the statewide average for all roadways of 14 percent. A total of 17 pedestrian crashes and 12 bicycle crashes were reported during the study period. Three of the pedestrian crashes resulted in fatalities. These pedestrian fatality crashes occurred at the SW 112 Avenue, SW 107 Avenue, and SW 93 Avenue intersections.

The predominant crash types reported along the segment are rear-end (45%) followed by left-turn (13%), and sideswipe crashes (11%). Figure 2 shows the crash distribution by type.

Figure 2: Crash Summary by Type

Table 1 details the crash rate, safety ratio, and confidence level crash statistics calculations for Sub-segment 2 (i.e., from the Florida's Turnpike to South Dixie Highway/SR 5/US 1), which belongs to the State Road system. The average crash rate for an urban, 4-5 lanes, two-way, divided raised facility (consistence with the FDOT's Crash Analysis Reporting System [CARS] data) was used for calculating the confidence level. Note that crash statistics were not calculated for the other Sub-segments, since they are not part of the State Road system.

Table 1: Crash Statistics Summary

Year	Number of Crashes	AADT	Actual Crash Rate (ACR)	District 6 Average Crash Rate (A)	Average Vehicle Exposure (M)	Critical Crash Rate (CCR)	Safety Ratio	Statistical Significance	Confidence Level
2011	181	32,000	6.294	4.569	28.756	5.863	1.073	4.372	99.9994%
2012	203	34,500	6.548	4.949	31.003	6.248	1.048	4.042	99.9974%
2013	230	38,000	6.735	5.788	34.148	7.128	0.945	2.337	99.0274%
2014	223	37,000	6.707	7.155	33.249	8.667	0.774	-0.934	17.5272%
2015	220	37,000	6.617	7.155	33.249	8.667	0.763	-1.128	12.9652%

As shown in Table 1, the calculated five-year average confidence level for sub-segment 2 reveals that this portion of SW 152 Street experienced abnormally high crash rate when compared to District 6 average for similar segments for the years 2011 and 2012. According to Highway Safety Improvement Guidelines (HSIG), urban locations with a confidence level higher of 99.95% and safety ratios above 1.0 are considered to experience abnormally high crash rates.

3.0 Study Segment Field Observations

A windshield field review of the study segment was conducted on May 25, 2016. The following items were identified during the field review:

- Sun glare makes difficult to observe eastbound and westbound signal heads at some signalized intersections within the segment.
- Traffic congestion in the eastbound direction and vehicles blocking the intersections were predominantly observed at SW 93 Avenue and South Dixie Highway/SR 5/US 1.
- Traffic congestion due to roadway construction was observed between SW 137 Avenue and Florida's turnpike.

Photographs from the field review are included in Appendix B.

4.0 Identification of Clusters Along the Segment

A preliminary safety analysis of the study segment was conducted by graphically plotting the five-year crash data along the study segment to identify locations with clusters of crashes. Figure 3 graphically depicts the overall perspective of the clustering of crashes along the study segment.

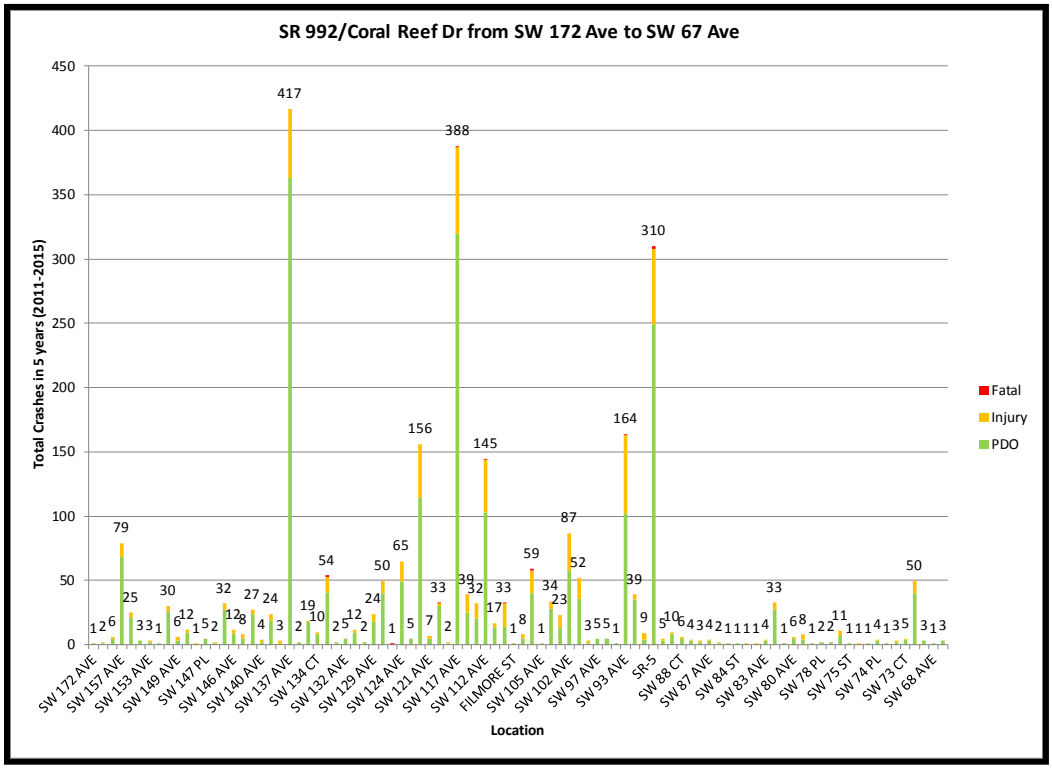

Figure 3: Crash Distribution Along Study Segment

As shown in Figure 3, the top five locations with the highest concentration of crashes were:

1. SW 152 Street at SR 825/SW 137 Avenue with 417 crashes.
2. SW 152 Street at SW 122 Avenue with 156 crashes.
3. SW 152 Street at SW 117 Avenue with 388 crashes.
4. SR 992/SW 152 Street at SW 93 Avenue with 164 crashes.
5. SR 992/SW 152 Street at South Dixie Highway/SR 5/US 1 with 310 crashes.

In addition, a review of the latest available (2014) high crash list for FDOT District 6, revealed that the intersections with SW 93 Avenue and South Dixie Highway/SR 5/US 1 were listed as high crash locations in 2011, 2012, and 2013. In addition, the intersections with Florida's Turnpike and SW 102 Avenue were listed as high crash locations in 2013 and the intersection with SW 112 Avenue intersection was listed as a high crash location in 2012.

The following section describes a detailed crash analysis of the locations that presented high frequency of crashes.

4.1 SW 152 Street at SW 825/SW 137 Avenue

A summary of crashes by type, severity, light and surface conditions at this intersection is presented in Table 2.

- A total of 417 crashes were reported at the intersection during the five-year analysis period with 10 crashes in 2011, 33 crashes in 2012, 101 crashes in 2013, 137 crashes in 2014, and 136 crashes in 2015.
- Based on crash severity, of the 417 crashes reported, 54 (12.9%) were injury type crashes, 363 (87.1%) were property damage only crashes, and no fatal crashes were reported.
- There were a total of 98 (23.5%) night/dusk/dawn crashes reported which is lower than the statewide average for all roadways of 30 percent.
- A total of 39 (9.4%) of the total crashes reported occurred under wet/slippery pavement conditions which is lower than the statewide average for all roadways of 14 percent.
- A Comparison of crash rates using Department's Expected Value Analysis (EVA), June 2007 Report showed that this intersection experienced abnormally high rear end, head on, right-turn, sideswipe, and run off road crashes when compared to similar intersections in Miami-Dade County with 95% confidence level. Furthermore, crash summary revealed that rear-end collisions were the leading type of crash accounting for 153 crashes (37 % of the crashes); sideswipe collisions were the second leading type of crash, accounting for 59 crashes (14% of the crashes), and left-turn collisions were the third leading type of crash, accounting for 28 crashes (7 % of the crashes).
- Based on the EVA and crash frequency, rear-end, left-turn, sideswipe crashes should be evaluated in more detail to identify countermeasures for their mitigation.

Table 2: Crash Summary – SW 152 Street/Coral Reef Drive at SW 137 Avenue/SR 825

SW 152 Street/Coral Reef Drive at SW 137 Avenue/SR 825 6 Lane x 6 Lane, Signalized, with Turn Lanes, 4 Leg Intersection		Number of Crashes Year 2011	2012	2013	2014	2015	5 Year Total Crashes	Mean Crashes Per Year	%	Expected Annual Crash Value Abnormally High Crashes per year 90th percentile	95th percentile	Abnormal 90th Percentile	Abnormal 95th Percentile
CRASH TYPE	Rear End	4	6	31	60	52	153	30.60	36.7%	17.12	18.90	X	X
	Head On	2	8	14	0	1	25	5.00	6.0%	0.91	1.03	X	X
	Angle	1	1	6	7	9	24	4.80	5.8%	8.06	8.82		
	Left Turn	0	3	3	12	10	28	5.60	6.7%	6.52	7.16		
	Right Turn	0	2	3	2	6	13	2.60	3.1%	1.88	2.07	X	X
	Sideswipe	2	3	17	14	23	59	11.80	14.1%	6.83	7.57	X	X
	Backed Into	0	0	0	0	0	0	0.00	0.0%	1.26	1.42		
	Coll. w/ Parked Car	0	0	0	0	0	0	0.00	0.0%	0.41	0.48		
	Coll. w/ Pedestrian	0	1	1	1	1	4	0.80	1.0%	1.34	1.51		
	Coll. w/ Bicycle	1	0	0	1	0	2	0.40	0.5%	0.67	0.76		
	Fixed Object	0	0	0	0	0	0	0.00	0.0%	1.52	1.69		
	Ran Off Road	0	0	3	2	0	5	1.00	1.2%	0.00	0.00	X	X
	Overturned	0	0	1	0	0	1	0.20	0.2%	0.29	0.34		
	Other	0	9	22	38	34	103	20.60	24.7%	11.59	12.84	X	X
	Total Crashes	**10**	**33**	**101**	**137**	**136**	**417**	**83.40**	**100.0%**	**47.45**	**51.51**	**X**	**X**
SEVERITY	PDO Crashes	4	26	95	121	117	363	72.60	87.1%	26.64	28.99	X	X
	Fatal Crashes	0	0	0	0	0	0	0.00	0.0%	0.85	0.97		
	Injury Crashes	6	7	6	16	19	54	10.80	12.9%	40.94	45.10		
LIGHTING CONDITIONS	Daylight	5	14	59	107	101	286	57.20	68.6%	32.17	35.01	X	X
	Dusk	0	1	1	2	0	4	0.80	1.0%	1.46	1.62		
	Dawn	2	0	0	0	1	3	0.60	0.7%	0.59	0.66	X	
	Dark	5	7	16	28	35	91	18.20	21.8%	15.05	16.53	X	X
	Unknown	0	11	25	0	0	36	7.20	8.6%	0.47	0.55	X	X
SURFACE CONDITIONS	Dry	10	19	63	124	124	340	68.00	81.5%	41.61	45.35	X	X
	Wet	0	3	11	13	12	39	7.80	9.4%	6.25	6.83	X	X
	Others	0	11	27	0	0	38	7.60	9.1%	0.96	1.07	X	X

A summary of potential crash patterns, probable causes, and recommendations for the intersection of SW 152 Street at SR 825/SW 137 Avenue is provided in Table 3. Additional crash summaries are presented in Appendix C.

Table 3: Summary of Findings and Recommendations
SW 152 Street/Coral Reef Drive at SW 137 Avenue/SR 825

Potential Crash Pattern	Probable Causes	Recommendations/Possible Countermeasures
Rear-End	Poor visibility of the signal heads Traffic congestion Driveways too close to the intersection	Evaluate visibility of signal heads and consider installation of retro-reflective tape border on all signal heads Evaluate consolidation of driveways
Sideswipe	Unexpected or last minute lane changes, especially in the westbound direction	Consider installation of lane change signs to proper advance warning of the westbound right-turn drop-lane
Left-Turn	Inadequate signal timing	Review existing signal timing to verify yellow and all red clearance intervals

4.2 SW 152 Street at SW 122 Avenue

A summary of crashes by type, severity, light and surface conditions at this intersection is presented in Table 4.

- A total of 156 crashes were reported at the intersection during the five-year analysis period with 19 crashes in 2011, 15 crashes in 2012, 36 crashes in 2013, 51 crashes in 2014, and 35 crashes in 2015.
- Based on crash severity, of the 156 crashes reported, 42 (26.9%) were injury type crashes, 114 (73.1%) were property damage only crashes, and no fatal crashes were reported.
- Rear-end collisions were the leading type of crash accounting for 70 crashes (45% % of the crashes); sideswipe collisions were the second leading type of crash, accounting for 21 crashes (13% of the crashes), and left-turn collisions were the third leading type of crash, accounting for 20 crashes (13% of the crashes).
- Most of the crashes occurred during the afternoon hours, under daylight (67.9%) and dry surface pavement conditions (78.2%).

Table 4: Crash Summary – SW 152 Street/Coral Reef Drive at SW 122 Avenue

SW 152 Street/Coral Reef Drive at SW 122 Avenue		Number of Crashes Year					5 Year Total Crashes	Mean Crashes Per Year	%
		2011	2012	2013	2014	2015			
CRASH TYPE	Rear End	9	3	13	32	13	70	14.00	44.9%
	Head On	1	3	3		1	8	2.00	5.1%
	Angle	1		2	1		4	1.33	2.6%
	Left Turn	2	5	7	3	3	20	4.00	12.8%
	Right Turn	0	0		0	1	1	0.25	0.6%
	Sideswipe	1	1	3	8	8	21	4.20	13.5%
	Backed Into	0	0	0	0	0	0	0.00	0.0%
	Coll. w/ Parked Car	0	0	0	0	0	0	0.00	0.0%
	Coll. w/ Pedestrian	0	0	1	1	0	2	0.40	1.3%
	Coll. w/ Bicycle	0	0	0	0	0	0	0.00	0.0%
	Fixed Object	0	0	0	0	0	0	0.00	0.0%
	Ran Off Road	1	0	1	1	2	5	1.00	3.2%
	Overturned	1	0	0	0	0	1	0.20	0.6%
	Other	3	3	6	5	7	24	4.80	15.4%
	Total Crashes	**19**	**15**	**36**	**51**	**35**	**156**	**31.20**	**100.0%**
SEVERITY	PDO Crashes	12	4	29	36	33	114	22.80	73.1%
	Fatal Crashes	0	0	0	0	0	0	0.00	0.0%
	Injury Crashes	7	11	7	15	2	42	8.40	26.9%
LIGHTING CONDITIONS	Daylight	13	9	24	36	24	106	21.20	67.9%
	Dusk				4	2	6	3.00	3.8%
	Dawn				1		1	1.00	0.6%
	Dark	6	4	4	10	9	33	6.60	21.2%
	Unknown		2	8			10	5.00	6.4%
SURFACE CONDITIONS	Dry	14	11	27	41	29	122	24.40	78.2%
	Wet	5	2	1	10	6	24	4.80	15.4%
	Others		2	8			10	5.00	6.4%

A summary of potential crash patterns, probable causes, and recommendations for the intersection of SW 152 Street at SW 122 Avenue is provided in Table 5. Additional crash summaries are presented in Appendix C.

Table 5: Summary of Findings and Recommendations
SW 152 Street/Coral Reef Drive at SW 122 Avenue

Potential Crash Pattern	Probable Causes	Recommendations/Possible Countermeasures
Rear-End	Poor visibility of the signal heads	Evaluate visibility of signal heads and consider installation of retro-reflective tape border on all signal heads
Sideswipe	Unexpected lane changes	Consider installation of lane change signs
Left-Turn	Inadequate signal timing	Review existing signal timing to verify yellow and all red clearance intervals

4.3 SW 152 Street at SW 117 Avenue

A summary of crashes by type, severity, light and surface conditions at this intersection is presented in Table 6.

- A total of 388 crashes were reported at the intersection during the five-year analysis period with 35 crashes in 2011, 40 crashes in 2012, 88 crashes in 2013, 130 crashes in 2014, and 95 crashes in 2015.
- Based on crash severity, of the 388 crashes reported, 67 (17.3%) were injury type crashes, 320 (82.5%) were property damage only crashes, and one fatal crash was reported. The fatal crash occurred in 2014 and it was classified as rear-end collision, which occurred under daylight and dry pavement surface conditions.
- Rear-end collisions were the leading type of crash accounting for 190 crashes (49 % of the crashes); sideswipe collisions were the second leading type of crash, accounting for 54 crashes (14% of the crashes), and left-turn collisions were the third leading type of crash, accounting for 43 crashes (11% of the crashes).
- Most of the crashes occurred during the afternoon hours, under daylight (68.3%) and dry surface pavement conditions (80.7%).
- Based on the crash frequency, rear-end, sideswipe, and left-turn crashes should be evaluated in more detail to identify countermeasures for their mitigation. Additional crash summaries are presented in Appendix C.

Table 6: Crash Summary – SW 152 Street/Coral Reef Drive at SW 117 Avenue

SW 152 Street/Coral Reef Drive at SW 117 Avenue		Number of Crashes Year					5 Year Total Crashes	Mean Crashes Per Year	%
		2011	2012	2013	2014	2015			
CRASH TYPE	Rear End	16	16	35	70	53	190	38.00	49.0%
	Head On	3	11	23	0	1	38	7.60	9.8%
	Angle	0	0	5	8	3	16	3.20	4.1%
	Left Turn	11	4	7	11	10	43	8.60	11.1%
	Right Turn	0	0	0	2	0	2	0.40	0.5%
	Sideswipe	2	2	9	25	16	54	10.80	13.9%
	Backed Into	0	0	0	0	0	0	0.00	0.0%
	Coll. w/ Parked Car	0	0	0	0	0	0	0.00	0.0%
	Coll. w/ Pedestrian	0	0	0	0	0	0	0.00	0.0%
	Coll. w/ Bicycle	0	0	0	0	1	1	0.20	0.3%
	Fixed Object	0	0	0	0	0	0	0.00	0.0%
	Ran Off Road	1	0	2	2	0	5	1.00	1.3%
	Overturned	0	0	1	0	1	2	0.40	0.5%
	Other	2	7	6	12	10	37	7.40	9.5%
	Total Crashes	**35**	**40**	**88**	**130**	**95**	**388**	**77.60**	**100.0%**
SEVERITY	PDO Crashes	21	32	76	105	86	320	64.00	82.5%
	Fatal Crashes	0	0	0	1	0	1	0.20	0.3%
	Injury Crashes	14	8	12	24	9	67	13.40	17.3%
LIGHTING CONDITIONS	Daylight	23	15	48	101	78	265	53.00	68.3%
	Dusk	0	1	1	1	1	4	0.80	1.0%
	Dawn	0	1	1	2	0	4	0.80	1.0%
	Dark	12	9	17	26	15	79	15.80	20.4%
	Unknown	0	14	21	0	1	36	7.20	9.3%
SURFACE CONDITIONS	Dry	29	25	59	114	86	313	62.60	80.7%
	Wet	0	1	8	16	8	33	6.60	8.5%
	Others	0	14	21	0	1	36	7.20	9.3%

A summary of potential crash patterns, probable causes, and recommendations for the intersection of SW 152 Street at SW 117 Avenue is provided in Table 7. Additional crash summaries are presented in Appendix C.

Table 7: Summary of Findings and Recommendations
SW 152 Street/Coral Reef Drive at SW 117 Avenue

Potential Crash Pattern	Probable Causes	Recommendations/Possible Countermeasures
Rear-End	Poor visibility of the signal heads Traffic congestion Lack of storage capacity	Evaluate visibility of signal heads and consider installation of retro-reflective tape border on all signal heads Consider extending eastbound and westbound left-turn storage bays
Sideswipe	Aggressive/improper lane change maneuvers	Consider installation of lane change signs
Left-Turn	Inadequate signal timing	Review existing signal timing to verify yellow and all red clearance intervals

4.4 SR 992/SW 152 Street at SW 93 Avenue

A summary of crashes by type, severity, light and surface conditions at this intersection is presented in Table 8.

- A total of 148 crashes were reported at the intersection during the five-year analysis period with 31 crashes in 2011, 42 crashes in 2012, 27 crashes in 2013, 24 crashes in 2014, and 24 crashes in 2015.
- Based on crash severity, of the 148 crashes reported, 61 (41.2%) were injury type crashes, 102 (68.9%) were property damage only crashes, and one fatal crash was reported. The fatal crash occurred in 2015 and involved a pedestrian, and the crash occurred under night time and dry pavement surface conditions.
- Wet pavement crashes (20.3%) are above the statewide average for all roadways of 14 percent.
- A Comparison of crash rates using Department's Expected Value Analysis (EVA), June 2007 Report showed that this intersection experienced abnormally high rear end, head-on, left-turn, sideswipe, and run off road crashes when compared to similar intersections in Miami-Dade County with 95% confidence level. Furthermore, crash summary revealed that rear-end collisions were the leading type of crash accounting for 80 crashes (54.1 % of the crashes); left-turn collisions were the second leading type of crash, accounting for 36 crashes (24.3% of the crashes), and angle collisions were the third leading type of crash, accounting for 12 crashes (8 % of the crashes).
- Based on the EVA and crash frequency, rear-end, left-turn, sideswipe, wet pavement crashes should be evaluated in more detail to identify countermeasures for their mitigation.

Table 8: Crash Summary – SR 992/SW 152 Street at SW 93 Avenue

SR 992/SW 152 Street/Coral Reef Drive at SW 93 Avenue 4 Lane x 2 Lane, Signalized, with Turn Lanes, 4 Leg Intersection, Un-Divided		Number of Crashes Year					5 Year Total Crashes	Mean Crashes Per Year	%	Expected Annual Crash Value Abnormally High Crashes per year		Abnormal 90th Percentile	Abnormal 95th Percentile
		2011	2012	2013	2014	2015				90th percentile	95th percentile		
CRASH TYPE	Rear End	18	22	15	13	12	80	16.00	54.1%	4.09	4.56	X	X
	Head On	0	2	1	1		4	1.00	2.7%	0.58	0.66	X	X
	Angle	4	4	2	1	1	12	2.40	8.1%	3.01	3.33		
	Left Turn	6	10	8	5	7	36	7.20	24.3%	1.29	1.44	X	X
	Right Turn	0	0	0	1		1	0.25	0.7%	0.39	0.45		
	Sideswipe	3	4	1	2	2	12	2.40	8.1%	1.40	1.56	X	X
	Backed Into	0	0	0	0	0	0	0.00	0.0%	0.40	0.46		
	Coll. w/ Parked Car	0	0	0	0	0	0	0.00	0.0%	0.50	0.58		
	Coll. w/ Pedestrian	0	0	0	0	1	1	0.20	0.7%	0.56	0.63		
	Coll. w/ Bicycle	0	0	0	0	0	0	0.00	0.0%	0.00	0.00		
	Fixed Object	0	0	0	0	0	0	0.00	0.0%	0.55	0.62		
	Ran Off Road	0	0	0	1	1	2	0.40	1.4%	0.00	0.00	X	X
	Overturned	0	0	0	0	0	0	0.00	0.0%	0.11	0.13		
	Other	0	0	0	0	0	0	0.00	0.0%	6.28	7.02		
	Total Crashes	**31**	**42**	**27**	**24**	**24**	**148**	**29.60**	**100.0%**	**15.00**	**16.48**	**X**	**X**
SEVERITY	PDO Crashes	19	27	19	17	20	102	20.40	68.9%	9.34	10.36	X	X
	Fatal Crashes	0	0	0	0	1	1	0.20	0.7%	0.00	0.00	X	X
	Injury Crashes	12	19	12	10	8	61	12.20	41.2%	11.25	12.43	X	
LIGHTING CONDITIONS	Daylight	30	35	26	24	23	138	27.60	93.2%	9.80	10.76	X	X
	Dusk	0	2	0	0	1	3	0.60	2.0%	0.65	0.73		
	Dawn	0	1	0	1	0	2	0.40	1.4%	0.49	0.55		
	Dark	1	8	2	3	5	19	3.80	12.8%	4.57	5.06		
	Unknown	0	1	3	0	0	4	0.80	2.7%	0.46	0.52	X	X
SURFACE CONDITIONS	Dry	26	36	21	21	26	130	26.00	87.8%	13.06	14.37	X	X
	Wet	5	9	7	6	3	30	6.00	20.3%	1.92	2.12	X	X
	Others	0	1	3	0	0	4	0.80	2.7%	0.57	0.65	X	X

A summary of potential crash patterns, probable causes, and recommendations for the intersection of SW 152 Street at SW 93 Avenue is provided in Table 9. Additional crash summaries are presented in Appendix C.

Table 9: Summary of Findings and Recommendations
SR 992/SW 152 Street at SW 93 Avenue

Potential Crash Pattern	Probable Causes	Recommendations/Possible Countermeasures
Rear-End	Poor visibility of the signal heads Traffic congestion	Evaluate visibility of signal heads and consider installation of retro-reflective tape border on all signal heads Consider improving signal timing and coordination with downstream signalized intersections
Left-Turn	Inadequate signal timing	Review existing signal timing to verify yellow and all red clearance intervals
Sideswipe	Inadequate channelization	Evaluate need of designated westbound left-turn bay
Wet	Slippery pavement Inadequate drainage	Review latest skid test Review existing drainage for adequacy

4.5 SR 992/SW 152 Street at SR 5/South Dixie Highway

A summary of crashes by type, severity, light and surface conditions at this intersection is presented in Table 10.

- A total of 310 crashes were reported at the intersection during the five-year analysis period with 51 crashes in 2011, 56 crashes in 2012, 78 crashes in 2013, 65 crashes in 2014, and 60 crashes in 2015.
- Based on crash severity, of the 310 crashes reported, 59 (19.0%) were injury type crashes, 249 (80.3%) were property damage only crashes, and two fatal crashes were reported. The fatal crash reported in 2011 involved a vehicle running off the road colliding with a utility pole; this crash occurred at night under wet pavement conditions. The fatal crash reported in 2014 was classified as a left-turn crash and occurred during the day under dry pavement surface conditions.
- Overall, most of the crashes occurred during the afternoon hours, under daylight (69.7%), and on dry surface pavement conditions (83.2 %).
- A Comparison of crash rates using Department's Expected Value Analysis (EVA), June 2007 Report showed that this intersection experienced abnormally high rear end, head on, sideswipe, and run off road crashes when compared to similar intersections in Miami-Dade County with 95% confidence level. Furthermore, crash summary revealed that rear-end collisions were the leading type of crash accounting for 174 crashes (56 % of the crashes); sideswipe collisions were the second leading type of crash, accounting for 47 crashes (15% of the crashes), and left-turn collisions were the third leading type of crash, accounting for 18 crashes (6 % of the crashes).
- Based on the EVA and crash frequency, rear-end, sideswipe, left-turn crashes should be evaluated in more detail to identify countermeasures for their mitigation. Additional crash summaries are presented in Appendix C.

Table 10: Crash Summary – SR 992/SW 152 Street at SR 5/US 1

SR 992/SW 152 Street/Coral Reef Drive at SR 5/South Dixie Highway 6 Lane x 4 Lane, Signalized, with Turn Lanes, 4 Leg Intersection		Number of Crashes Year 2011	2012	2013	2014	2015	5 Year Total Crashes	Mean Crashes Per Year	%	Expected Annual Crash Value Abnormally High Crashes per year 90th percentile	95th percentile	Abnormal 90th Percentile	Abnormal 95th Percentile
CRASH TYPE	Rear End	27	30	36	38	43	174	34.80	56.1%	17.26	18.90	X	X
	Head On	2	8	8	1		19	4.75	6.1%	1.64	1.84	X	X
	Angle	1	2	4	4	2	13	2.60	4.2%	9.19	9.92		
	Left Turn	3	3	5	7	0	18	3.60	5.8%	6.13	6.73		
	Right Turn	0	1	2	0	0	3	0.60	1.0%	1.36	1.53		
	Sideswipe	8	5	13	10	11	47	9.40	15.2%	4.92	5.37	X	X
	Backed Into	0	0	0	0	0	0	0.00	0.0%	0.84	0.94		
	Coll. w/ Parked Car	0	0	0	0	0	0	0.00	0.0%	0.57	0.65		
	Coll. w/ Pedestrian	1	0	0	0	0	1	0.20	0.3%	1.80	2.00		
	Coll. w/ Bicycle	1	0	1	0	0	2	0.40	0.6%	0.49	0.55		
	Fixed Object	0	0	0	0	0	0	0.00	0.0%	2.01	2.24		
	Ran Off Road	1	0	0	0	0	1	0.20	0.3%	0.11	0.13	X	X
	Overturned	0	0	0	0	0	0	0.00	0.0%	0.28	0.33		
	Other	7	7	9	5	4	32	6.40	10.3%	21.05	23.42		
	Total Crashes	**51**	**56**	**78**	**65**	**60**	**310**	**62.00**	**100.0%**	**54.94**	**59.43**	**X**	**X**
SEVERITY	PDO Crashes	35	42	65	51	56	249	49.80	80.3%	36.95	40.35	X	X
	Fatal Crashes	1	0	0	1	0	2	0.40	0.6%	0.56	0.63		
	Injury Crashes	15	14	13	13	4	59	11.80	19.0%	38.34	41.71		
LIGHTING CONDITIONS	Daylight	40	36	49	48	43	216	43.20	69.7%	35.12	38.03	X	X
	Dusk	1	1	5	2	1	10	2.00	3.2%	1.43	1.58	X	X
	Dawn	0	0	1	3	1	5	1.00	1.6%	1.03	1.16		
	Dark	10	12	14	11	15	62	12.40	20.0%	18.94	20.61		
	Unknown	0	7	9	1	0	17	3.40	5.5%	1.15	1.30	X	X
SURFACE CONDITIONS	Dry	47	43	60	55	53	258	51.60	83.2%	45.71	49.41	X	X
	Wet	1	8	9			18	6.00	5.8%	8.78	9.62		
	Others	3	5	9	10	7	34	6.80	11.0%	1.88	2.11	X	X

A summary of potential crash patterns, probable causes, and recommendations for the intersection of SW 152 Street at SR 5/ South Dixie Highway is provided in Table 11. Additional crash summaries are presented in Appendix C.

Table 11: Summary of Findings and Recommendations
SR 992/SW 152 Street at SR 5/US 1

Potential Crash Pattern	Probable Causes	Recommendations/Possible Countermeasures
Rear-End	Poor visibility of the signal heads Traffic congestion	Evaluate visibility of signal heads and consider installation of retro-reflective tape border on all signal heads
Sideswipe	Aggressive/improper lane change maneuvers Traffic congestion	Consider signal optimization
Left-Turn	Inadequate signal timing	Review existing signal timing to verify yellow and all red clearance intervals

5.0 Study Segment Recommendations

- Based on the preliminary review of crash data, it is recommended to conduct a detailed safety study at the intersections with SW 137 Avenue, SW 122 Avenue, and SW 117 Avenue to identify crash patterns and develop improvements that are suitable and cost effective. These actions are intended to mitigate the crash patterns and their associated probable causes.
- Review previous safety studies conducted by the Florida Department of Transportation at the intersections with SW 93 Avenue and South Dixie Highway/SR 5/US 1 to recommend additional improvements to mitigated the identified crash patterns.
- In addition, it is recommended to investigate all fatal crashes that were reported during the five-year analysis period.

Appendix A
Segment Crash Summary

CRASH STATISTICS

SR 992/Coral Reef Dr from SW 172 Ave to SW 67 Ave		Number of Crashes Year					5 Year Total Crashes	Mean Crashes Per Year	%
		2011	2012	2013	2014	2015			
CRASH TYPE	Rear End	140	146	251	384	334	1255	251.00	45.0%
	Head On	10	72	79	5	7	173	34.60	6.2%
	Angle	17	20	33	44	34	148	29.60	5.3%
	Left Turn	47	45	75	94	92	353	70.60	12.7%
	Right Turn	0	6	8	12	19	45	9.00	1.6%
	Sideswipe	29	34	65	94	90	312	62.40	11.2%
	Backed Into	0	0	0	0	0	0	0.00	0.0%
	Coll. w/ Parked Car	0	0	0	0	0	0	0.00	0.0%
	Coll. w/ Pedestrian	2	2	3	3	7	17	3.40	0.6%
	Coll. w/ Bicycle	3	2	2	4	1	12	2.40	0.4%
	Fixed Object	0	0	0	0	0	0	0.00	0.0%
	Ran Off Road	9	15	20	28	21	93	18.60	3.3%
	Overturned	2	0	3	0	2	7	1.40	0.3%
	Other	21	51	82	106	111	371	74.20	13.3%
	Total Crashes	**280**	**393**	**621**	**774**	**718**	**2786**	**557.20**	**100.0%**
SEVERITY	PDO Crashes	153	268	504	625	613	2163	432.60	77.6%
	Fatal Crashes	2	0	1	3	4	10	2.00	0.4%
	Injury Crashes	125	125	116	146	101	613	122.60	22.0%
LIGHTING CONDITIONS	Daylight	217	225	391	594	542	1969	393.80	70.7%
	Dusk	6	9	15	17	18	65	13.00	2.3%
	Dawn	4	2	5	13	6	30	6.00	1.1%
	Dark	51	80	99	148	150	528	105.60	19.0%
	Unknown	2	77	111	2	2	194	38.80	7.0%
SURFACE CONDITIONS	Dry	246	271	437	663	628	2245	449.00	80.6%
	Wet	31	44	72	110	88	345	69.00	12.4%
	Others	3	78	112	1	2	196	39.20	7.0%
MONTH OF YEAR	January	28	16	36	74	65	219	43.80	7.9%
	February	31	21	36	51	38	177	35.40	6.4%
	March	26	32	35	78	51	222	44.40	8.0%
	April	29	25	40	68	49	211	42.20	7.6%
	May	30	17	42	79	51	219	43.80	7.9%
	June	19	17	39	65	57	197	39.40	7.1%
	July	15	33	32	67	57	204	40.80	7.3%
	August	30	52	66	59	61	268	53.60	9.6%
	September	20	43	71	57	75	266	53.20	9.5%
	October	23	49	68	61	72	273	54.60	9.8%
	November	15	45	69	58	82	269	53.80	9.7%
	December	14	43	87	57	60	261	52.20	9.4%
DAY OF WEEK	Sunday	16	27	49	63	65	220	44.00	7.9%
	Monday	40	37	70	82	104	333	66.60	12.0%
	Tuesday	45	51	99	126	110	431	86.20	15.5%
	Wednesday	35	53	76	105	121	390	78.00	14.0%
	Thursday	45	50	101	132	88	416	83.20	14.9%
	Friday	30	54	82	119	93	378	75.60	13.6%
	Saturday	20	54	71	100	87	332	66.40	11.9%
HOUR OF DAY	00:00-06:00	31	35	56	87	53	262	52.40	9.4%
	06:00-09:00	41	62	103	124	102	432	86.40	15.5%
	09:00-11:00	23	29	53	64	62	231	46.20	8.3%
	11:00-13:00	19	29	47	31	41	167	33.40	6.0%
	13:00-15:00	44	58	98	119	107	426	85.20	15.3%
	15:00-18:00	79	89	135	178	185	666	133.20	23.9%
	18:00-24:00	43	91	129	171	168	602	120.40	21.6%

Notes:

1) Collision with Bicycle Crashes include Collision with Bicycle/Collision with Bicycle in Bike Lane (Codes 11 and 12).
2) Fixed Object Crashes include collisions with sign/sign post, utility/light pole, guardrail, fence, concrete barrier wall, bridge, pier, abutment, rail, tree, shrubbery, construction barricade/sign, traffic gate, crash attenuators, other fixed objects (incl. above road).
3) Ran-off-Road Crashes include Ran in Ditch/Culvert and Ran off road into water (Codes 29 and 30).
4) Other crashes include crashes not categorized as the crash types shown in the table.
5) Dark Crashes include both scenarios - with and without street lighting.

CRASH HISTOGRAMS

SR 992/Coral Reef Dr from SW 172 Ave to SW 67 Ave

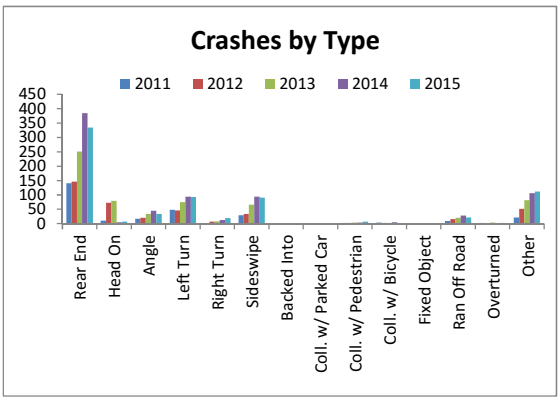

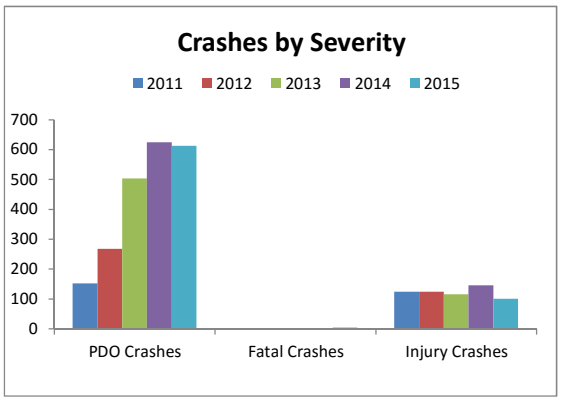

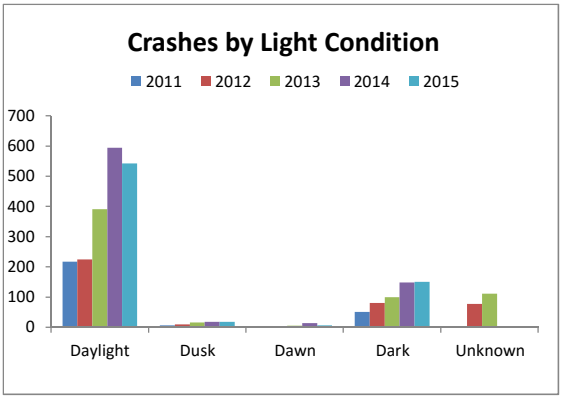

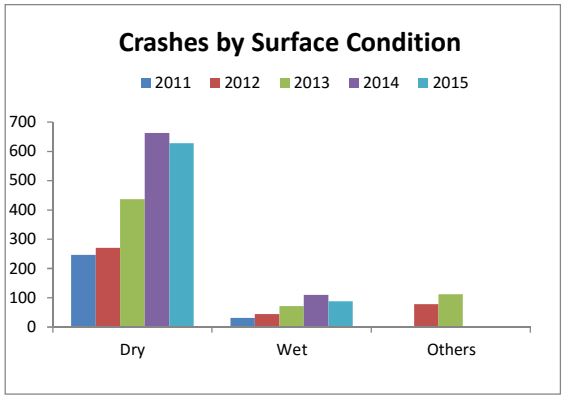

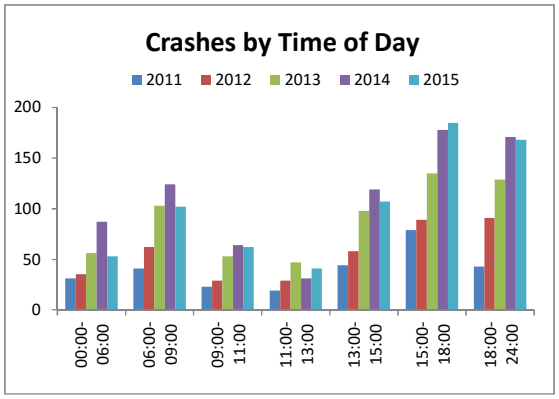

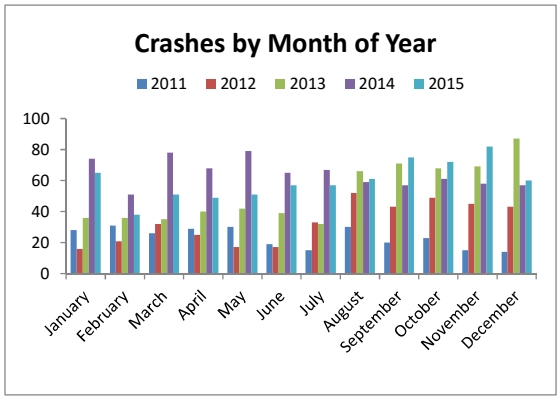

Appendix B
Field Review Photographs

SW 152 Street/Coral Reef Drive at SW 142 Avenue looking west

SW 152 Street/Coral Reef Drive at 137 Avenue looking west

SW 152 Street/Coral Reef Drive at 137 Avenue looking east

SW 152 Street/Coral Reef Drive approaching SW 122 Avenue looking east

SW 152 Street/Coral Reef Drive at SW 122 Avenue looking east

SW 152 Street/Coral Reef Drive approaching SW 117 Avenue looking east

SW 152 Street/Coral Reef Drive approaching Florida's Turnpike looking east

SW 152 Street/Coral Reef Drive approaching Florida's Turnpike looking west

SW 152 Street/Coral Reef Drive approaching SW 102 Avenue looking east

SW 152 Street/Coral Reef Drive approaching SW 93 Avenue looking east

SW 152 Street/Coral Reef Drive approaching SW 93 Avenue looking west

SW 152 Street/Coral Reef Drive approaching SR 5/US 1 Avenue looking east

SW 152 Street/Coral Reef Drive at SR 5/US 1 Avenue looking east

SW 152 Street/Coral Reef Drive at SR 5/US 1 Avenue looking west

SW 152 Street/Coral Reef Drive east of SR 5/US 1 Avenue looking east

Appendix C
Crash Summary - Intersections

FDOT DISTRICT 6
EXPECTED VALUES ANALYSIS

SW 152 Street/Coral Reef Drive at SW 137 Avenue/SR 825 6 Lane x 6 Lane, Signalized, with Turn Lanes, 4 Leg Intersection		Number of Crashes Year					5 Year Total Crashes	Mean Crashes Per Year	%	Expected Annual Crash Value Abnormally High Crashes per year		Abnormal 90th Percentile	Abnormal 95th Percentile
		2011	2012	2013	2014	2015				90th percentile	95th percentile		
CRASH TYPE	Rear End	4	6	31	60	52	153	30.60	36.7%	17.12	18.90	X	X
	Head On	2	8	14	0	1	25	5.00	6.0%	0.91	1.03	X	X
	Angle	1	1	6	7	9	24	4.80	5.8%	8.06	8.82		
	Left Turn	0	3	3	12	10	28	5.60	6.7%	6.52	7.16		
	Right Turn	0	2	3	2	6	13	2.60	3.1%	1.88	2.07	X	X
	Sideswipe	2	3	17	14	23	59	11.80	14.1%	6.83	7.57	X	X
	Backed Into	0	0	0	0	0	0	0.00	0.0%	1.26	1.42		
	Coll. w/ Parked Car	0	0	0	0	0	0	0.00	0.0%	0.41	0.48		
	Coll. w/ Pedestrian	0	1	1	1	1	4	0.80	1.0%	1.34	1.51		
	Coll. w/ Bicycle	1	0	0	1	0	2	0.40	0.5%	0.67	0.76		
	Fixed Object	0	0	0	0	0	0	0.00	0.0%	1.52	1.69		
	Ran Off Road	0	0	3	2	0	5	1.00	1.2%	0.00	0.00	X	X
	Overturned	0	0	1	0	0	1	0.20	0.2%	0.29	0.34		
	Other	0	9	22	38	34	103	20.60	24.7%	11.59	12.84	X	X
	Total Crashes	**10**	**33**	**101**	**137**	**136**	**417**	**83.40**	**100.0%**	**47.45**	**51.51**	**X**	**X**
SEVERITY	PDO Crashes	4	26	95	121	117	363	72.60	87.1%	26.64	28.99	X	X
	Fatal Crashes	0	0	0	0	0	0	0.00	0.0%	0.85	0.97		
	Injury Crashes	6	7	6	16	19	54	10.80	12.9%	40.94	45.10		
LIGHTING CONDITIONS	Daylight	5	14	59	107	101	286	57.20	68.6%	32.17	35.01	X	X
	Dusk	0	1	1	2	0	4	0.80	1.0%	1.46	1.62		
	Dawn	2	0	0	0	1	3	0.60	0.7%	0.59	0.66	X	
	Dark	5	7	16	28	35	91	18.20	21.8%	15.05	16.53	X	X
	Unknown	0	11	25	0	0	36	7.20	8.6%	0.47	0.55	X	X
SURFACE CONDITIONS	Dry	10	19	63	124	124	340	68.00	81.5%	41.61	45.35	X	X
	Wet	0	3	11	13	12	39	7.80	9.4%	6.25	6.83	X	X
	Others	0	11	27	0	0	38	7.60	9.1%	0.96	1.07	X	X
MONTH OF YEAR	January	1	1	4	7	13	26	5.20	6.2%	4.66	5.08	X	X
	February	2	1	2	11	5	21	4.20	5.0%	4.01	4.41	X	
	March	0	0	8	17	7	32	6.40	7.7%	5.43	6.02	X	X
	April	1	1	5	11	9	27	5.40	6.5%	4.46	4.95	X	X
	May	0	0	6	6	4	16	3.20	3.8%	4.04	4.40		
	June	3	1	11	14	11	40	8.00	9.6%	4.00	4.39	X	X
	July	0	5	5	12	14	36	7.20	8.6%	5.17	5.70	X	X
	August	2	10	10	12	10	44	8.80	10.6%	4.97	5.44	X	X
	September	1	5	13	10	18	47	9.40	11.3%	3.13	3.42	X	X
	October	0	4	9	13	17	43	8.60	10.3%	4.00	4.35	X	X
	November	0	3	15	13	10	41	8.20	9.8%	4.35	4.81	X	X
	December	0	2	13	11	18	44	8.80	10.6%	4.78	5.26	X	X
HOUR OF DAY	00:00-06:00	1	1	7	4	12	25	5.00	6.0%	4.63	5.10	X	
	06:00-09:00	1	7	13	11	17	49	9.80	11.8%	7.22	7.91	X	X
	09:00-11:00	1	1	10	13	16	41	8.20	9.8%	4.45	4.91	X	X
	11:00-13:00	0	5	15	21	16	57	11.40	13.7%	5.59	6.17	X	X
	13:00-15:00	1	3	16	22	16	58	11.60	13.9%	6.82	7.48	X	X
	15:00-18:00	4	8	16	30	30	88	17.60	21.1%	9.37	10.19	X	X
	18:00-24:00	2	8	24	36	29	99	19.80	23.7%	13.41	14.69	X	X

Notes:

1) Collision with Bicycle Crashes include Collision with Bicycle/Collision with Bicycle in Bike Lane (Codes 11 and 12).
2) Fixed Object Crashes include collisions with sign/sign post, utility/light pole, guardrail, fence, concrete barrier wall, bridge, pier, abutment, rail, tree, shrubbery, construction barricade/sign, traffic gate, crash attenuators, other fixed objects (incl. above road).
3) Ran-off-Road Crashes include Ran in Ditch/Culvert and Ran off road into water (Codes 29 and 30).
4) Other crashes include crashes not categorized as the crash types shown in the table.
5) Dark Crashes include both scenarios - with and without street lighting.

CRASH HISTOGRAMS

SW 152 Street/Coral Reef Drive at SW 137 Avenue/SR 825

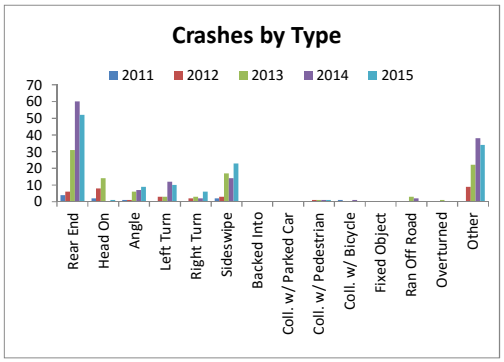

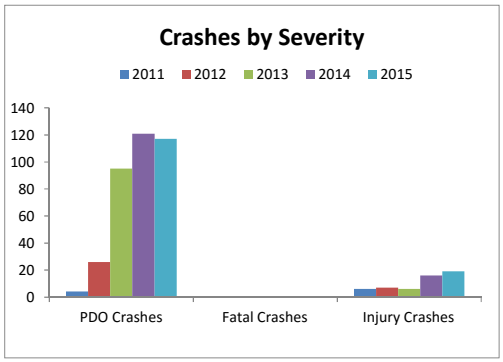

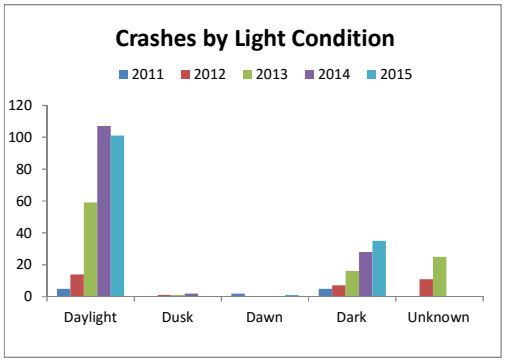

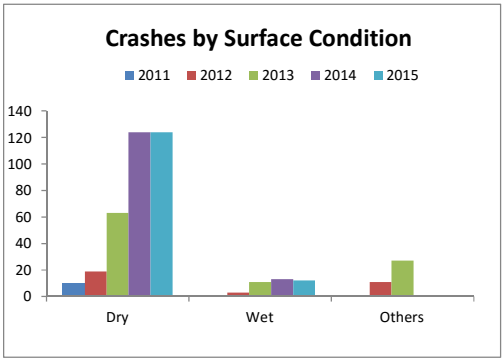

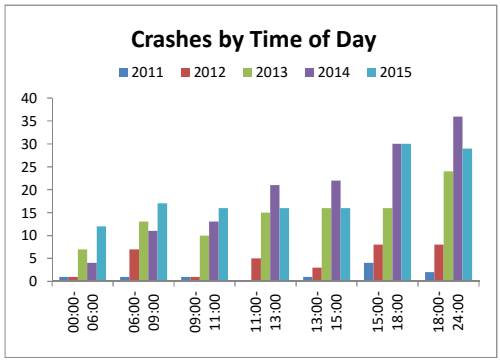

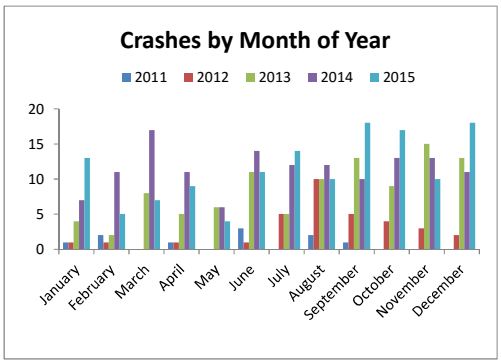

CRASH STATISTICS

SW 152 Street/Coral Reef Drive at SW 122 Avenue		Number of Crashes Year					5 Year Total Crashes	Mean Crashes Per Year	%
		2011	2012	2013	2014	2015			
CRASH TYPE	Rear End	9	3	13	32	13	70	14.00	44.9%
	Head On	1	3	3		1	8	2.00	5.1%
	Angle	1		2	1		4	1.33	2.6%
	Left Turn	2	5	7	3	3	20	4.00	12.8%
	Right Turn	0	0		0	1	1	0.25	0.6%
	Sideswipe	1	1	3	8	8	21	4.20	13.5%
	Backed Into	0	0	0	0	0	0	0.00	0.0%
	Coll. w/ Parked Car	0	0	0	0	0	0	0.00	0.0%
	Coll. w/ Pedestrian	0	0	1	1	0	2	0.40	1.3%
	Coll. w/ Bicycle	0	0	0	0	0	0	0.00	0.0%
	Fixed Object	0	0	0	0	0	0	0.00	0.0%
	Ran Off Road	1	0	1	1	2	5	1.00	3.2%
	Overturned	1	0	0	0	0	1	0.20	0.6%
	Other	3	3	6	5	7	24	4.80	15.4%
	Total Crashes	**19**	**15**	**36**	**51**	**35**	**156**	**31.20**	**100.0%**
SEVERITY	PDO Crashes	12	4	29	36	33	114	22.80	73.1%
	Fatal Crashes	0	0	0	0	0	0	0.00	0.0%
	Injury Crashes	7	11	7	15	2	42	8.40	26.9%
LIGHTING CONDITIONS	Daylight	13	9	24	36	24	106	21.20	67.9%
	Dusk				4	2	6	3.00	3.8%
	Dawn				1		1	1.00	0.6%
	Dark	6	4	4	10	9	33	6.60	21.2%
	Unknown		2	8			10	5.00	6.4%
SURFACE CONDITIONS	Dry	14	11	27	41	29	122	24.40	78.2%
	Wet	5	2	1	10	6	24	4.80	15.4%
	Others		2	8			10	5.00	6.4%
MONTH OF YEAR	January	1	1	4	10	5	21	4.20	13.5%
	February	3	2	2	3	1	11	2.20	7.1%
	March	4	1	1	5	1	12	2.40	7.7%
	April	1	3	1	4		9	2.25	5.8%
	May	2	1	4	7	2	16	3.20	10.3%
	June	1		1	4	5	11	2.75	7.1%
	July	3		3	7	1	14	3.50	9.0%
	August		2	6	3	2	13	3.25	8.3%
	September		3	5	1	4	13	3.25	8.3%
	October	3		4	2	2	11	2.75	7.1%
	November	1	1	4	3	7	16	3.20	10.3%
	December		1	1	2	5	9	2.25	5.8%
HOUR OF DAY	00:00-06:00	3	1	2	1	1	8	1.60	5.1%
	06:00-09:00	2	1	4	12	8	27	5.40	17.3%
	09:00-11:00	0	0	2	5	2	9	1.80	5.8%
	11:00-13:00	5	2	5	5	3	20	4.00	12.8%
	13:00-15:00	1	3	5	6	3	18	3.60	11.5%
	15:00-18:00	6	4	9	8	7	34	6.80	21.8%
	18:00-24:00	2	4	9	14	11	40	8.00	25.6%

Notes:

1) Collision with Bicycle Crashes include Collision with Bicycle/Collision with Bicycle in Bike Lane (Codes 11 and 12).
2) Fixed Object Crashes include collisions with sign/sign post, utility/light pole, guardrail, fence, concrete barrier wall, bridge, pier, abutment, rail, tree, shrubbery, construction barricade/sign, traffic gate, crash attenuators, other fixed objects (incl. above road).
3) Ran-off-Road Crashes include Ran in Ditch/Culvert and Ran off road into water (Codes 29 and 30).
4) Other crashes include crashes not categorized as the crash types shown in the table.
5) Dark Crashes include both scenarios - with and without street lighting.

CRASH HISTOGRAMS

SW 152 Street/Coral Reef Drive at SW 122 Avenue

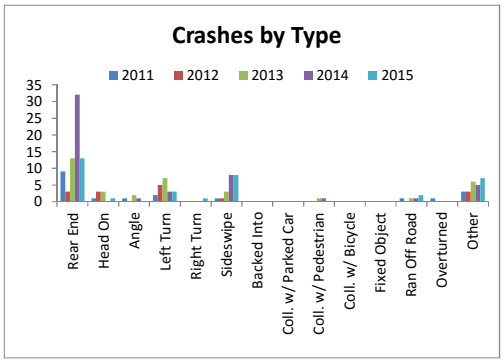

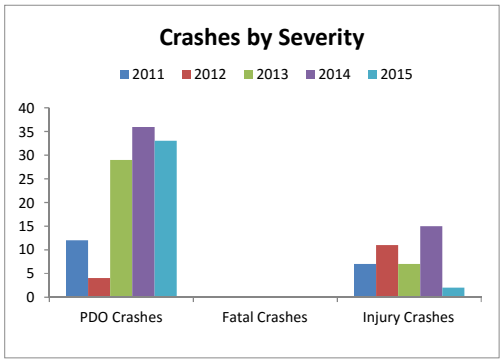

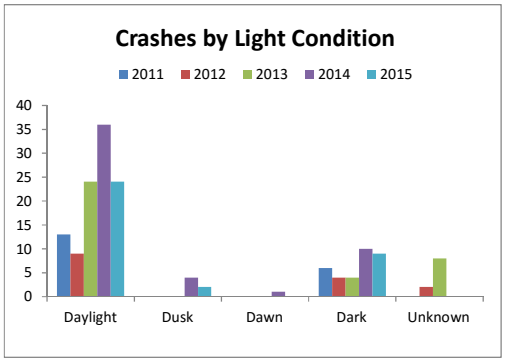

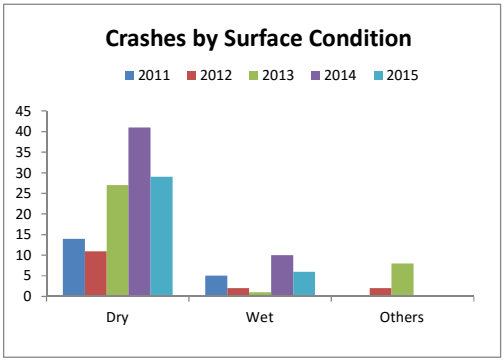

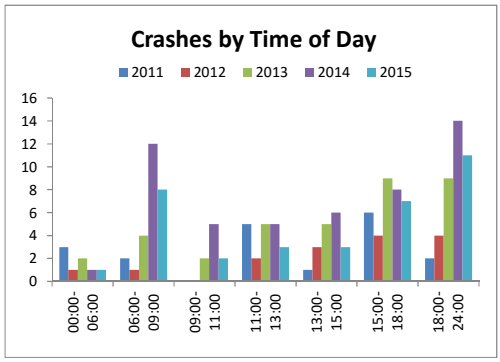

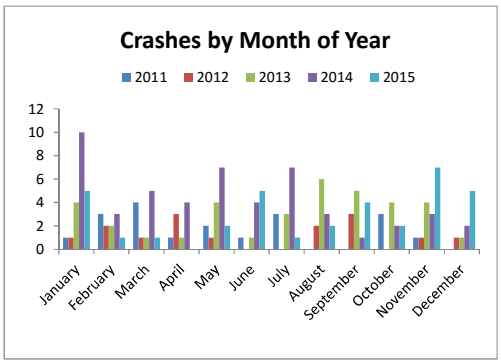

CRASH STATISTICS

SW 152 Street/Coral Reef Drive at SW 117 Avenue		Number of Crashes Year					5 Year Total Crashes	Mean Crashes Per Year	%
		2011	2012	2013	2014	2015			
CRASH TYPE	Rear End	16	16	35	70	53	190	38.00	49.0%
	Head On	3	11	23	0	1	38	7.60	9.8%
	Angle	0	0	5	8	3	16	3.20	4.1%
	Left Turn	11	4	7	11	10	43	8.60	11.1%
	Right Turn	0	0	0	2	0	2	0.40	0.5%
	Sideswipe	2	2	9	25	16	54	10.80	13.9%
	Backed Into	0	0	0	0	0	0	0.00	0.0%
	Coll. w/ Parked Car	0	0	0	0	0	0	0.00	0.0%
	Coll. w/ Pedestrian	0	0	0	0	0	0	0.00	0.0%
	Coll. w/ Bicycle	0	0	0	0	1	1	0.20	0.3%
	Fixed Object	0	0	0	0	0	0	0.00	0.0%
	Ran Off Road	1	0	2	2	0	5	1.00	1.3%
	Overturned	0	0	1	0	1	2	0.40	0.5%
	Other	2	7	6	12	10	37	7.40	9.5%
	Total Crashes	**35**	**40**	**88**	**130**	**95**	**388**	**77.60**	**100.0%**
SEVERITY	PDO Crashes	21	32	76	105	86	320	64.00	82.5%
	Fatal Crashes	0	0	0	1	0	1	0.20	0.3%
	Injury Crashes	14	8	12	24	9	67	13.40	17.3%
LIGHTING CONDITIONS	Daylight	23	15	48	101	78	265	53.00	68.3%
	Dusk	0	1	1	1	1	4	0.80	1.0%
	Dawn	0	1	1	2	0	4	0.80	1.0%
	Dark	12	9	17	26	15	79	15.80	20.4%
	Unknown	0	14	21	0	1	36	7.20	9.3%
SURFACE CONDITIONS	Dry	29	25	59	114	86	313	62.60	80.7%
	Wet	0	1	8	16	8	33	6.60	8.5%
	Others	0	14	21	0	1	36	7.20	9.3%
MONTH OF YEAR	January	2	2	6	16	8	34	6.80	8.8%
	February	4	2	5	8	2	21	4.20	5.4%
	March	4	2	7	15	7	35	7.00	9.0%
	April	1	2	2	11	13	29	5.80	7.5%
	May	3	2	2	19	7	33	6.60	8.5%
	June	4	1	6	8	5	24	4.80	6.2%
	July	0	3	3	14	6	26	5.20	6.7%
	August	3	3	11	8	7	32	6.40	8.2%
	September	4	6	12	9	9	40	8.00	10.3%
	October	5	4	9	10	9	37	7.40	9.5%
	November	4	9	10	3	18	44	8.80	11.3%
	December	1	4	15	9	4	33	6.60	8.5%
HOUR OF DAY	00:00-06:00	2	3	5	2	0	12	2.40	3.1%
	06:00-09:00	3	11	16	29	10	69	13.80	17.8%
	09:00-11:00	3	8	9	13	16	49	9.80	12.6%
	11:00-13:00	8	3	14	12	10	47	9.40	12.1%
	13:00-15:00	5	3	13	16	14	51	10.20	13.1%
	15:00-18:00	5	5	16	27	26	79	15.80	20.4%
	18:00-24:00	9	7	15	31	19	81	16.20	20.9%

Notes:

1) Collision with Bicycle Crashes include Collision with Bicycle/Collision with Bicycle in Bike Lane (Codes 11 and 12).
2) Fixed Object Crashes include collisions with sign/sign post, utility/light pole, guardrail, fence, concrete barrier wall, bridge, pier, abutment, rail, tree, shrubbery, construction barricade/sign, traffic gate, crash attenuators, other fixed objects (incl. above road).
3) Ran-off-Road Crashes include Ran in Ditch/Culvert and Ran off road into water (Codes 29 and 30).
4) Other crashes include crashes not categorized as the crash types shown in the table.
5) Dark Crashes include both scenarios - with and without street lighting.

CRASH HISTOGRAMS

SW 152 Street/Coral Reef Drive at SW 117 Avenue

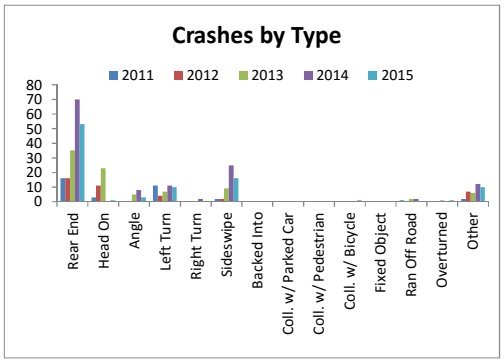

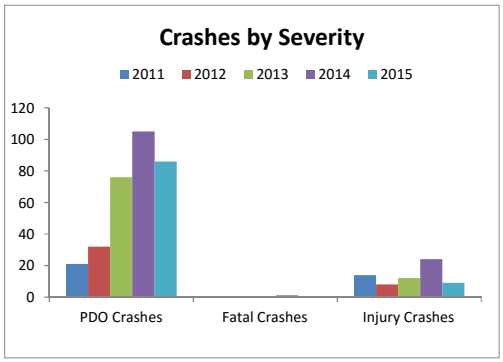

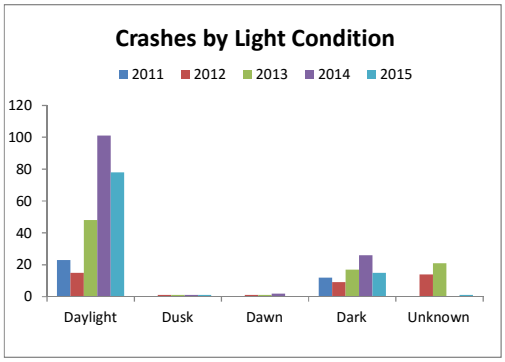

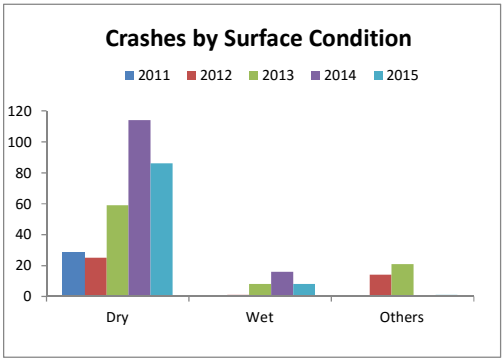

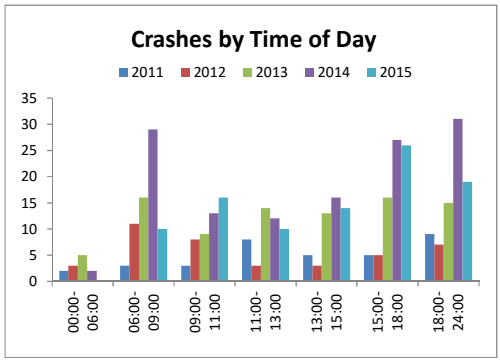

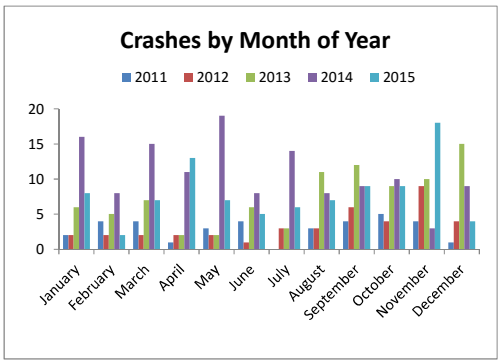

FDOT DISTRICT 6
EXPECTED VALUES ANALYSIS

SR 992/SW 152 Street/Coral Reef Drive at SW 93 Avenue 4 Lane x 2 Lane, Signalized, with Turn Lanes, 4 Leg Intersection, Un-Divided		Number of Crashes Year					5 Year Total Crashes	Mean Crashes Per Year	%	Expected Annual Crash Value Abnormally High Crashes per year		Abnormal 90th Percentile	Abnormal 95th Percentile
		2011	2012	2013	2014	2015				90th percentile	95th percentile		
CRASH TYPE	Rear End	18	22	15	13	12	80	16.00	54.1%	4.09	4.56	X	X
	Head On	0	2	1	1		4	1.00	2.7%	0.58	0.66	X	X
	Angle	4	4	2	1	1	12	2.40	8.1%	3.01	3.33		
	Left Turn	6	10	8	5	7	36	7.20	24.3%	1.29	1.44	X	X
	Right Turn	0	0	0	1		1	0.25	0.7%	0.39	0.45		
	Sideswipe	3	4	1	2	2	12	2.40	8.1%	1.40	1.56	X	X
	Backed Into	0	0	0	0	0	0	0.00	0.0%	0.40	0.46		
	Coll. w/ Parked Car	0	0	0	0	0	0	0.00	0.0%	0.50	0.58		
	Coll. w/ Pedestrian	0	0	0	0	1	1	0.20	0.7%	0.56	0.63		
	Coll. w/ Bicycle	0	0	0	0	0	0	0.00	0.0%	0.00	0.00		
	Fixed Object	0	0	0	0	0	0	0.00	0.0%	0.55	0.62		
	Ran Off Road	0	0	0	1	1	2	0.40	1.4%	0.00	0.00	X	X
	Overturned	0	0	0	0	0	0	0.00	0.0%	0.11	0.13		
	Other	0	0	0	0	0	0	0.00	0.0%	6.28	7.02		
	Total Crashes	**31**	**42**	**27**	**24**	**24**	**148**	**29.60**	**100.0%**	**15.00**	**16.48**	**X**	**X**
SEVERITY	PDO Crashes	19	27	19	17	20	102	20.40	68.9%	9.34	10.36	X	X
	Fatal Crashes	0	0	0	0	1	1	0.20	0.7%	0.00	0.00	X	X
	Injury Crashes	12	19	12	10	8	61	12.20	41.2%	11.25	12.43	X	
LIGHTING CONDITIONS	Daylight	30	35	26	24	23	138	27.60	93.2%	9.80	10.76	X	X
	Dusk	0	2	0	0	1	3	0.60	2.0%	0.65	0.73		
	Dawn	0	1	0	1	0	2	0.40	1.4%	0.49	0.55		
	Dark	1	8	2	3	5	19	3.80	12.8%	4.57	5.06		
	Unknown	0	1	3	0	0	4	0.80	2.7%	0.46	0.52	X	X
SURFACE CONDITIONS	Dry	26	36	21	21	26	130	26.00	87.8%	13.06	14.37	X	X
	Wet	5	9	7	6	3	30	6.00	20.3%	1.92	2.12	X	X
	Others	0	1	3	0	0	4	0.80	2.7%	0.57	0.65	X	X
MONTH OF YEAR	January	7	6		3	2	18	4.50	12.2%	1.33	1.49	X	X
	February	2	1	4	2	2	11	2.20	7.4%	1.40	1.56	X	X
	March	3	6	3	3	4	19	3.80	12.8%	1.76	1.96	X	X
	April	4	2	2	2	1	11	2.20	7.4%	1.47	1.65	X	X
	May	6	4	2	4	0	16	3.20	10.8%	1.50	1.67	X	X
	June	0	3	2	1	2	8	1.60	5.4%	1.32	1.47	X	X
	July	1	2	4	1	3	11	2.20	7.4%	1.28	1.42	X	X
	August	5	3	3	4	4	19	3.80	12.8%	1.68	1.87	X	X
	September	0	5	2	4	3	14	2.80	9.5%	1.96	2.19	X	X
	October	0	4	1	2	4	11	2.20	7.4%	1.92	2.14	X	X
	November	1	4	2	0	3	10	2.00	6.8%	1.49	1.68	X	X
	December	2	6	6	1	1	16	3.20	10.8%	1.33	1.48	X	X
HOUR OF DAY	00:00-06:00	0	2	0	1	1	4	0.80	2.7%	2.04	2.29		
	06:00-09:00	8	8	8	5	4	33	6.60	22.3%	2.23	2.50	X	X
	09:00-11:00	3	1	0	3	1	8	1.60	5.4%	1.67	1.86		
	11:00-13:00	2	5	3	3	1	14	2.80	9.5%	1.60	1.77	X	X
	13:00-15:00	8	10	8	8	5	39	7.80	26.4%	1.96	2.18	X	X
	15:00-18:00	9	14	8	5	11	47	9.40	31.8%	3.50	3.88	X	X
	18:00-24:00	1	6	4	2	6	19	3.80	12.8%	4.38	4.81		

Notes:

1) Collision with Bicycle Crashes include Collision with Bicycle/Collision with Bicycle in Bike Lane (Codes 11 and 12).
2) Fixed Object Crashes include collisions with sign/sign post, utility/light pole, guardrail, fence, concrete barrier wall, bridge, pier, abutment, rail, tree, shrubbery, construction barricade/sign, traffic gate, crash attenuators, other fixed objects (incl. above road).
3) Ran-off-Road Crashes include Ran in Ditch/Culvert and Ran off road into water (Codes 29 and 30).
4) Other crashes include crashes not categorized as the crash types shown in the table.
5) Dark Crashes include both scenarios - with and without street lighting.

CRASH HISTOGRAMS

SR 992/SW 152 Street/Coral Reef Drive at SW 93 Avenue

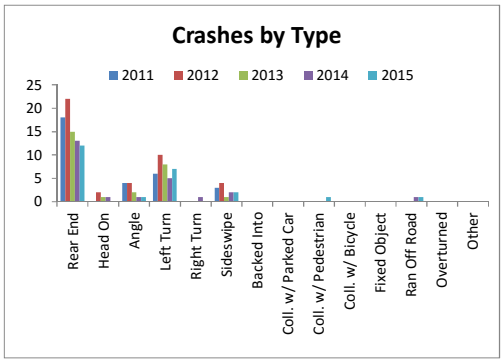

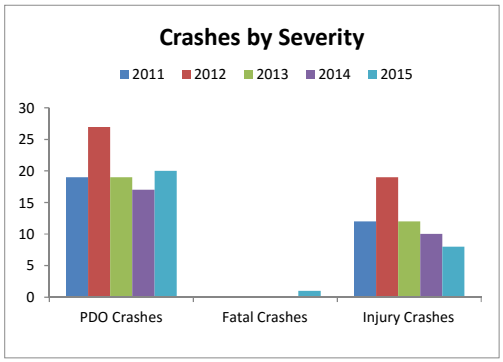

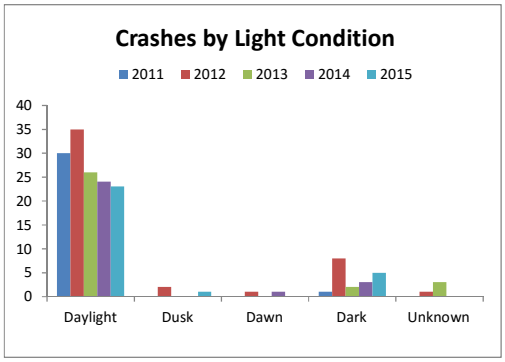

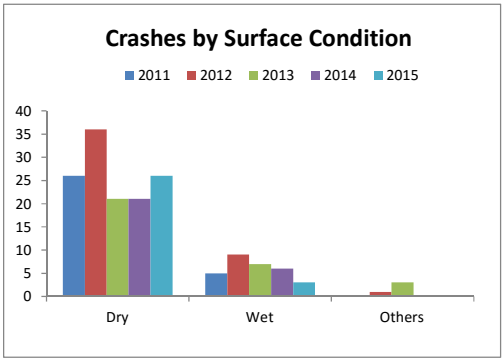

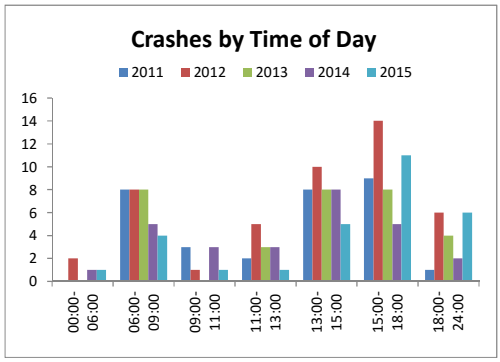

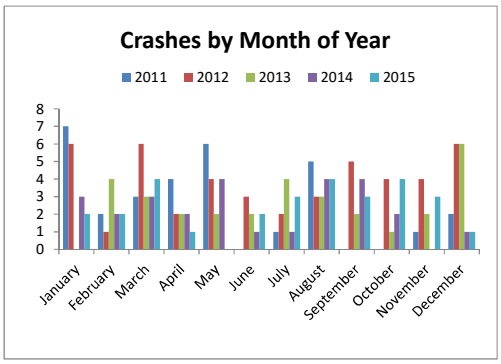

FDOT DISTRICT 6
EXPECTED VALUES ANALYSIS

SR 992/SW 152 Street/Coral Reef Drive at SR 5/South Dixie Highway 6 Lane x 4 Lane, Signalized, with Turn Lanes, 4 Leg Intersection		Number of Crashes Year					5 Year Total Crashes	Mean Crashes Per Year	%	Expected Annual Crash Value Abnormally High Crashes per year		Abnormal 90th Percentile	Abnormal 95th Percentile
		2011	2012	2013	2014	2015				90th percentile	95th percentile		
CRASH TYPE	Rear End	27	30	36	38	43	174	34.80	56.1%	17.26	18.90	X	X
	Head On	2	8	8	1		19	4.75	6.1%	1.64	1.84	X	X
	Angle	1	2	4	4	2	13	2.60	4.2%	9.19	9.92		
	Left Turn	3	3	5	7	0	18	3.60	5.8%	6.13	6.73		
	Right Turn	0	1	2	0	0	3	0.60	1.0%	1.36	1.53		
	Sideswipe	8	5	13	10	11	47	9.40	15.2%	4.92	5.37	X	X
	Backed Into	0	0	0	0	0	0	0.00	0.0%	0.84	0.94		
	Coll. w/ Parked Car	0	0	0	0	0	0	0.00	0.0%	0.57	0.65		
	Coll. w/ Pedestrian	1	0	0	0	0	1	0.20	0.3%	1.80	2.00		
	Coll. w/ Bicycle	1	0	1	0	0	2	0.40	0.6%	0.49	0.55		
	Fixed Object	0	0	0	0	0	0	0.00	0.0%	2.01	2.24		
	Ran Off Road	1	0	0	0	0	1	0.20	0.3%	0.11	0.13	X	X
	Overturned	0	0	0	0	0	0	0.00	0.0%	0.28	0.33		
	Other	7	7	9	5	4	32	6.40	10.3%	21.05	23.42		
	Total Crashes	**51**	**56**	**78**	**65**	**60**	**310**	**62.00**	**100.0%**	**54.94**	**59.43**	**X**	**X**
SEVERITY	PDO Crashes	35	42	65	51	56	249	49.80	80.3%	36.95	40.35	X	X
	Fatal Crashes	1	0	0	1	0	2	0.40	0.6%	0.56	0.63		
	Injury Crashes	15	14	13	13	4	59	11.80	19.0%	38.34	41.71		
LIGHTING CONDITIONS	Daylight	40	36	49	48	43	216	43.20	69.7%	35.12	38.03	X	X
	Dusk	1	1	5	2	1	10	2.00	3.2%	1.43	1.58	X	X
	Dawn	0	0	1	3	1	5	1.00	1.6%	1.03	1.16		
	Dark	10	12	14	11	15	62	12.40	20.0%	18.94	20.61		
	Unknown	0	7	9	1	0	17	3.40	5.5%	1.15	1.30	X	X
SURFACE CONDITIONS	Dry	47	43	60	55	53	258	51.60	83.2%	45.71	49.41	X	X
	Wet	1	8	9			18	6.00	5.8%	8.78	9.62		
	Others	3	5	9	10	7	34	6.80	11.0%	1.88	2.11	X	X
MONTH OF YEAR	January	6	2	2	5	4	19	3.80	6.1%	5.04	5.52		
	February	7	5	8	5	4	29	5.80	9.4%	4.59	5.02	X	X
	March	7	2	4	3	4	20	4.00	6.5%	5.92	6.46		
	April	7	7	7	6	3	30	6.00	9.7%	5.30	5.82	X	X
	May	4	3	5	11	3	26	5.20	8.4%	4.81	5.25	X	
	June	2	6	5	6	8	27	5.40	8.7%	5.74	6.30		
	July	3	2	4	10	4	23	4.60	7.4%	4.96	5.42		
	August	6	8	10	3	3	30	6.00	9.7%	5.66	6.17	X	
	September	1	5	9	3	9	27	5.40	8.7%	4.92	5.39	X	X
	October	1	7	9	4	6	27	5.40	8.7%	5.40	5.88	X	
	November	2	3	9	3	8	25	5.00	8.1%	4.85	5.32	X	
	December	5	6	6	6	4	27	5.40	8.7%	4.55	5.00	X	X
HOUR OF DAY	00:00-06:00	5	3	3	3	4	18	3.60	5.8%	8.65	9.58		
	06:00-09:00	2	4	10	15	9	40	8.00	12.9%	6.94	7.61	X	X
	09:00-11:00	4	6	7	5	1	23	4.60	7.4%	5.30	5.82		
	11:00-13:00	3	5	10	11	8	37	7.40	11.9%	5.78	6.29	X	X
	13:00-15:00	9	7	6	7	8	37	7.40	11.9%	6.32	6.85	X	X
	15:00-18:00	21	15	15	10	14	75	15.00	24.2%	11.52	12.50	X	X
	18:00-24:00	7	16	27	14	16	80	16.00	25.8%	15.51	16.83	X	

Notes:

1) Collision with Bicycle Crashes include Collision with Bicycle/Collision with Bicycle in Bike Lane (Codes 11 and 12).
2) Fixed Object Crashes include collisions with sign/sign post, utility/light pole, guardrail, fence, concrete barrier wall, bridge, pier, abutment, rail, tree, shrubbery, construction barricade/sign, traffic gate, crash attenuators, other fixed objects (incl. above road).
3) Ran-off-Road Crashes include Ran in Ditch/Culvert and Ran off road into water (Codes 29 and 30).
4) Other crashes include crashes not categorized as the crash types shown in the table.
5) Dark Crashes include both scenarios - with and without street lighting.

CRASH HISTOGRAMS

SR 992/SW 152 Street/Coral Reef Drive at SR 5/South Dixie Highway

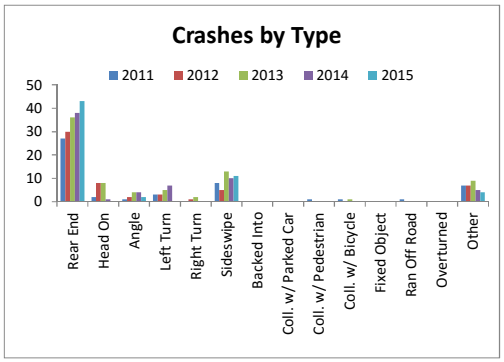

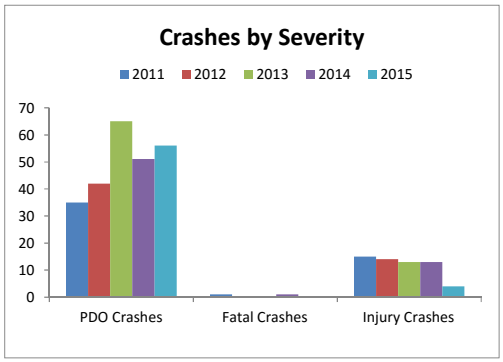

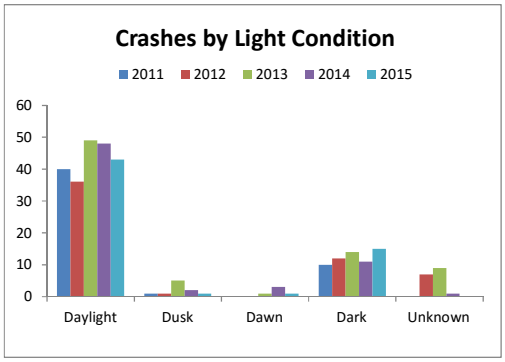

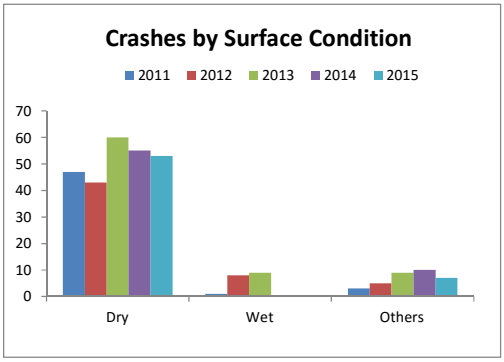

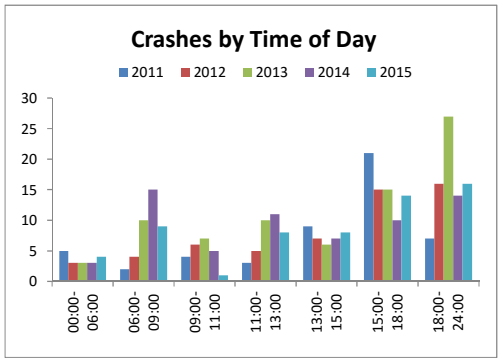

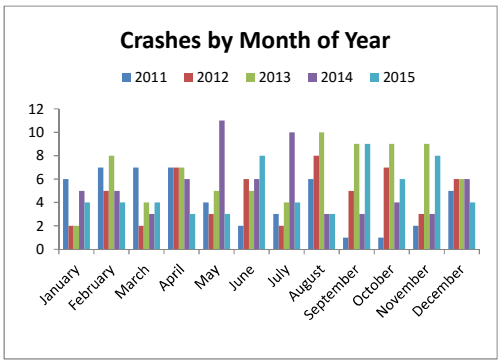

Appendix D: Bus Service Maps in the Study Corridor

Route 35

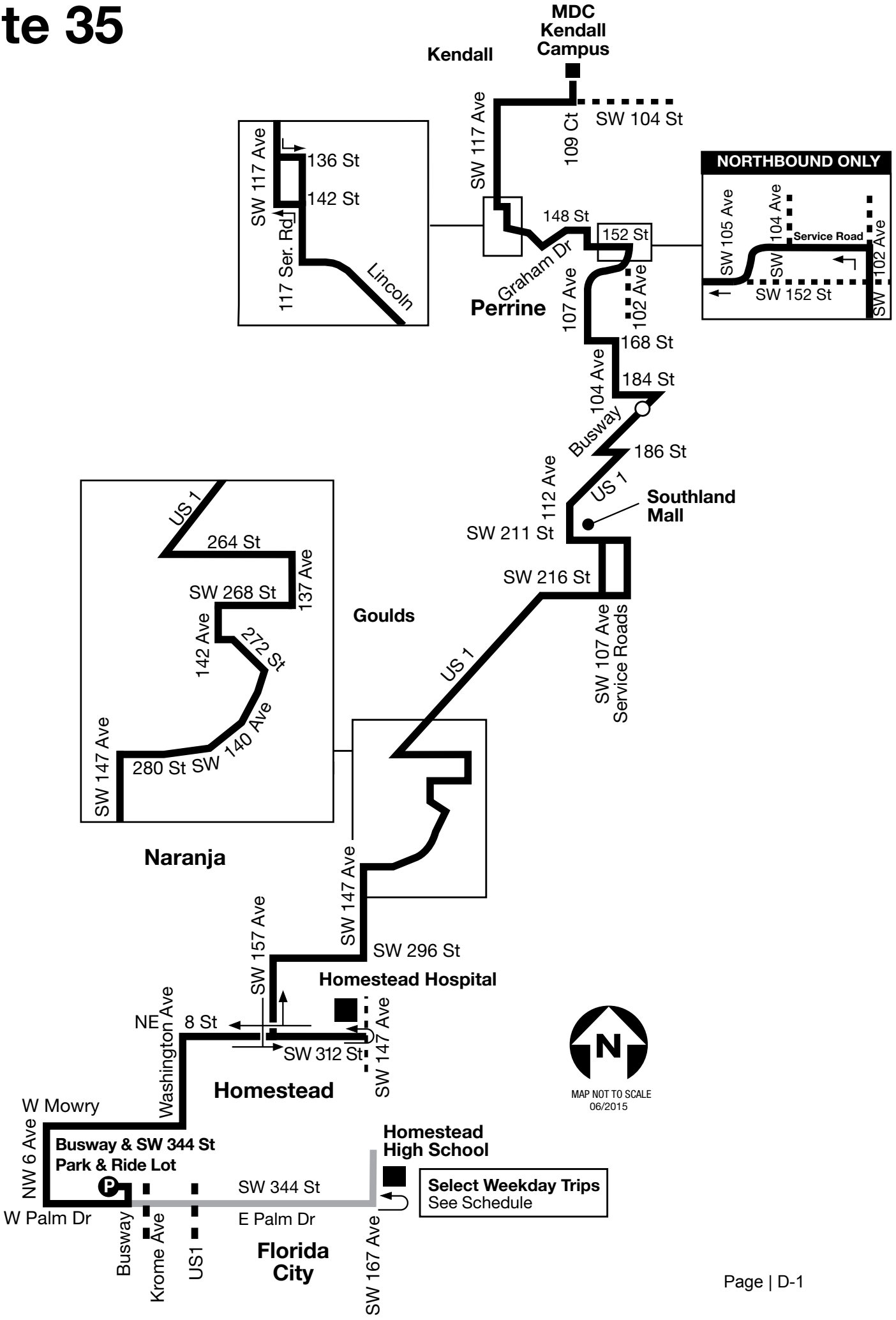
MDC Kendall Campus
Kendall
SW 104 St
109 Ct
SW 117 Ave
136 St
142 St
SW 117 Ave
117 Ser. Rd
Lincoln
148 St
152 St
Graham Dr
Perrine
107 Ave
102 Ave
NORTHBOUND ONLY
SW 105 Ave
104 Ave
Service Road
SW 102 Ave
SW 152 St
168 St
184 St
104 Ave
Busway
186 St
US 1
Southland Mall
112 Ave
SW 211 St
SW 216 St
SW 107 Ave Service Roads
US 1
Goulds
US 1
264 St
137 Ave
SW 268 St
142 Ave
212 St
140 Ave
SW 147 Ave
280 St SW
Naranja
SW 147 Ave
SW 157 Ave
SW 296 St
Homestead Hospital
NE 8 St
Washington Ave
SW 312 St
SW 147 Ave
Homestead
W Mowry
NW 6 Ave
Busway & SW 344 St Park & Ride Lot
W Palm Dr
Busway
Krome Ave
US1
SW 344 St
E Palm Dr
Florida City
SW 167 Ave
Homestead High School
Select Weekday Trips
See Schedule
N
MAP NOT TO SCALE
06/2015

52

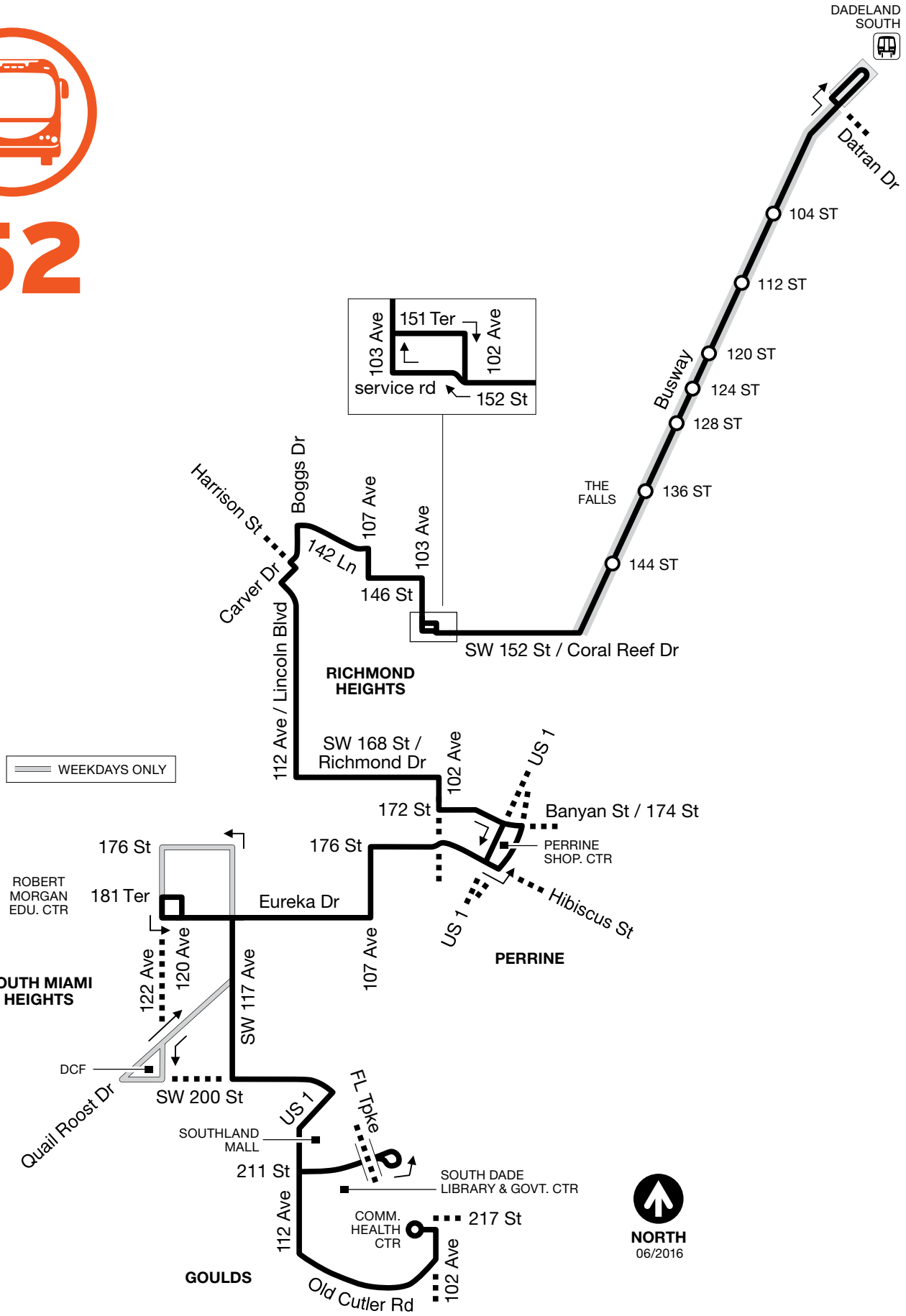
DADELAND SOUTH
Datran Dr
104 ST
112 ST
120 ST
124 ST
128 ST
136 ST
144 ST
Busway
THE FALLS
151 Ter
103 Ave
102 Ave
service rd
152 St
Harrison St
Boggs Dr
107 Ave
103 Ave
142 Ln
146 St
Carver Dr
SW 152 St / Coral Reef Dr
RICHMOND HEIGHTS
112 Ave / Lincoln Blvd
SW 168 St / Richmond Dr
102 Ave
US 1
172 St
Banyan St / 174 St
PERRINE SHOP. CTR
WEEKDAYS ONLY
176 St
176 St
ROBERT MORGAN EDU. CTR
181 Ter
Eureka Dr
Hibiscus St
US 1
PERRINE
107 Ave
SOUTH MIAMI HEIGHTS
122 Ave
120 Ave
SW 117 Ave
DCF
Quail Roost Dr
SW 200 St
US 1
FL Tpke
SOUTHLAND MALL
211 St
SOUTH DADE LIBRARY & GOVT. CTR
112 Ave
COMM. HEALTH CTR
217 St
102 Ave
GOULDS
Old Cutler Rd
NORTH
06/2016

Route 57

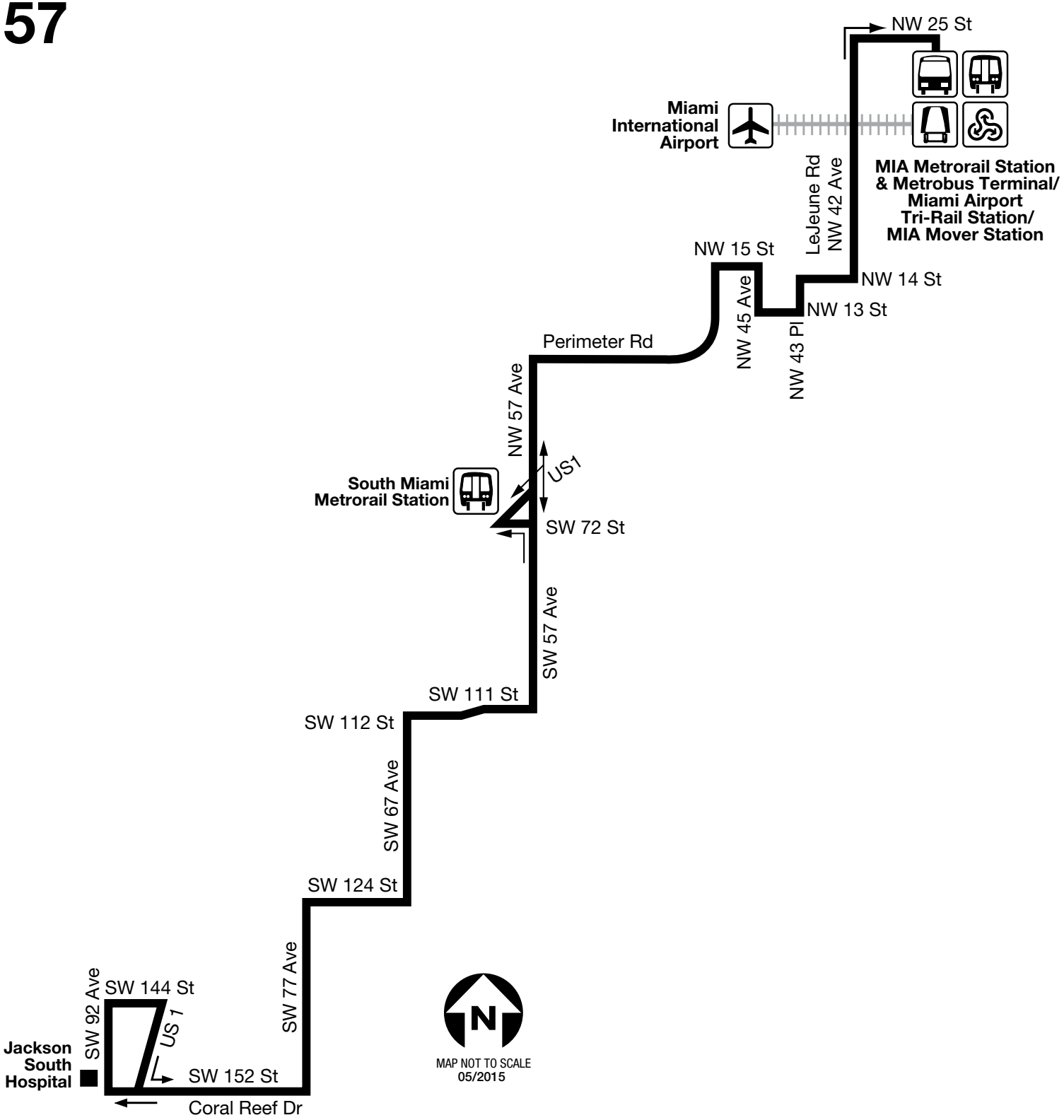
NW 25 St
Miami International Airport
MIA Metrorail Station & Metrobus Terminal/ Miami Airport Tri-Rail Station/ MIA Mover Station
LeJeune Rd
NW 42 Ave
NW 15 St
NW 14 St
NW 13 St
NW 45 Ave
NW 43 Pl
Perimeter Rd
NW 57 Ave
US1
South Miami Metrorail Station
SW 72 St
SW 57 Ave
SW 111 St
SW 112 St
SW 67 Ave
SW 124 St
SW 77 Ave
SW 144 St
SW 92 Ave
US 1
Jackson South Hospital
SW 152 St
Coral Reef Dr
N
MAP NOT TO SCALE
05/2015

Route 137
West Dade Connection

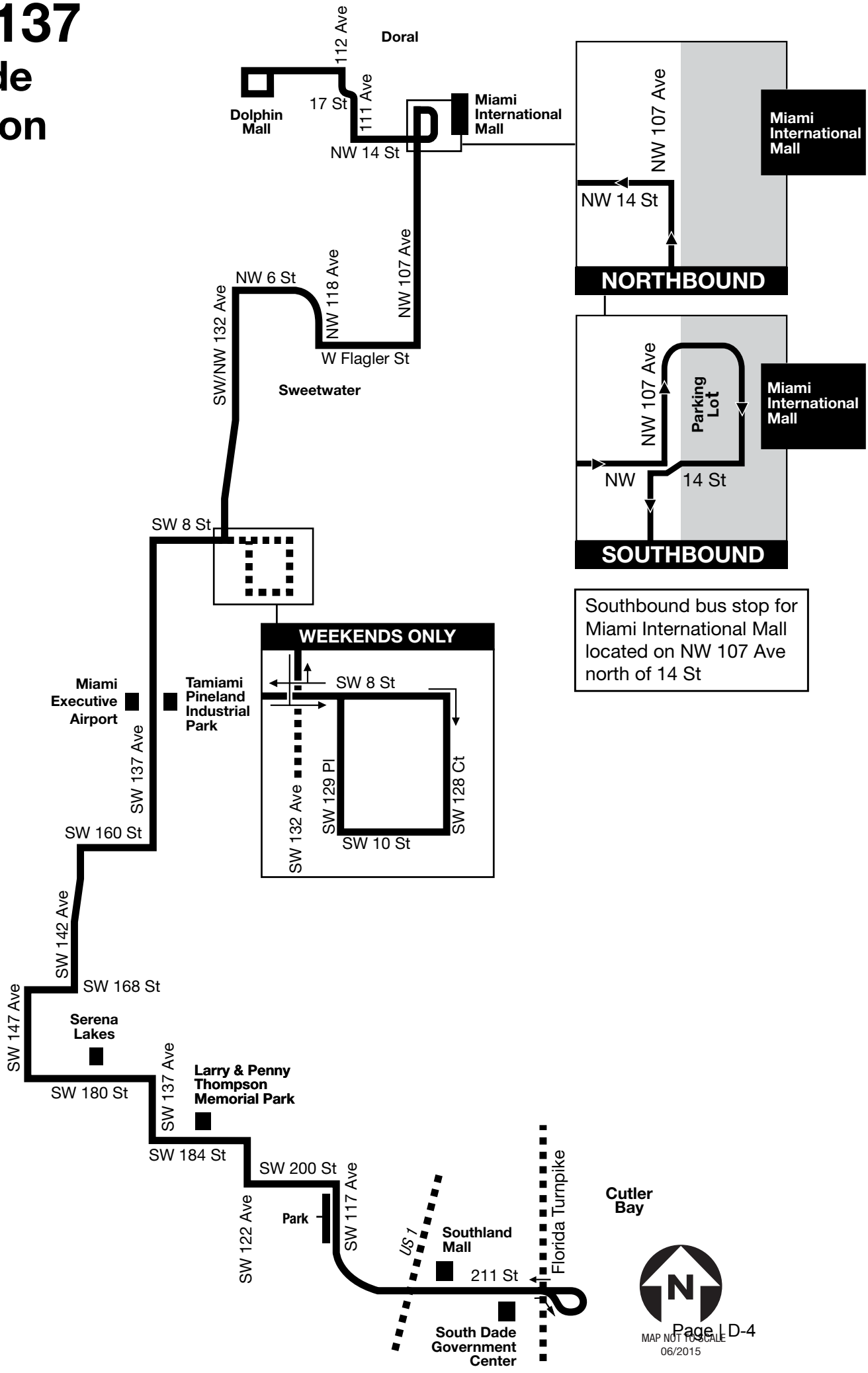

252

CORAL REEF MAX

LIMITED STOPS
Dadeland S. to 107 Ave

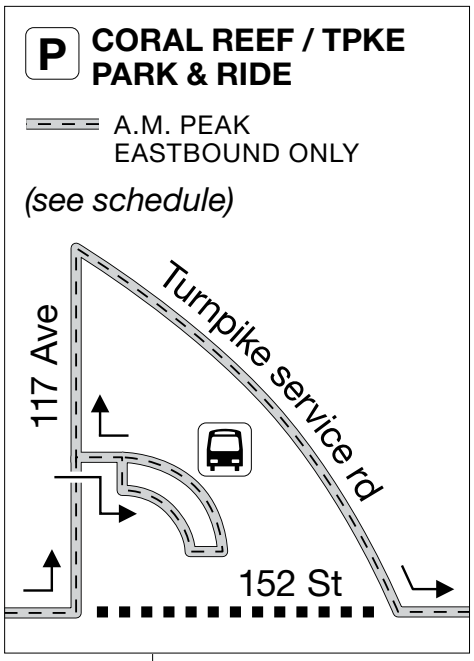

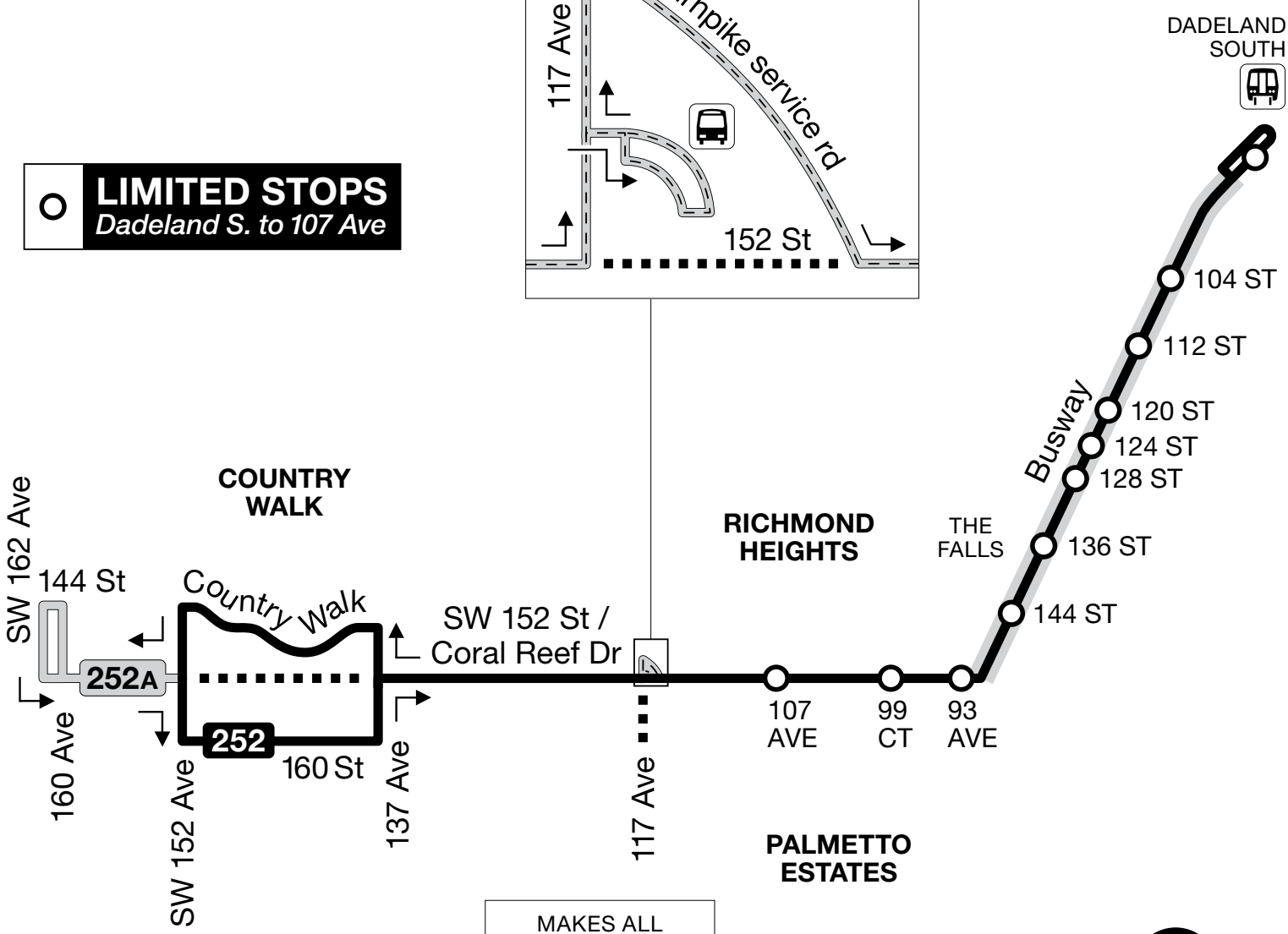

MAKES ALL
LOCAL STOPS
WEST OF 107 AVE

PEAK & WEEKEND ONLY

(see schedule)

NORTH
06/2016

Appendix E: Future Year Traffic Analysis Information

Arterial Level of Service: EB SW 152nd St #5

Cross Street	Node	Delay (s/veh)	Travel time (s)	Dist (mi)	Arterial Speed
SW 152nd Ave	25	21.9	63.6	0.5	29
	64	3.6	12.4	0.1	27
	33	2.1	30.2	0.3	37
SW 147th Ave	24	4.6	13.1	0.1	28
SW 142nd Ave	23	15.9	58.5	0.5	30
Publix Entrance	22	135.8	170.7	0.4	8
SW 137th Ave	2	116.5	127.0	0.1	3
Total		300.4	475.5	2.0	15

Arterial Level of Service: WB SW 152nd St #5

Cross Street	Node	Delay (s/veh)	Travel time (s)	Dist (mi)	Arterial Speed
Publix Entrance	22	4.9	16.5	0.1	26
	23	9.7	43.7	0.4	33
SW 147th Ave	24	8.5	51.2	0.5	35
	33	1.3	10.8	0.1	34
	64	4.2	32.3	0.3	35
SW 152nd Ave	25	24.4	32.8	0.1	11
SW 157th Ave	1	113.8	160.0	0.5	12
Total		166.7	347.3	2.0	21

Arterial Level of Service: EB SW 152nd St #4

Cross Street	Node	Delay (s/veh)	Travel time (s)	Dist (mi)	Arterial Speed
	41	5.1	20.2	0.2	29
SW 132nd Ave	21	2.9	22.3	0.2	37
SW 129th Ave	20	5.4	49.8	0.5	37
SW 127th Ave	3	40.8	69.4	0.3	17
SW 124th Ave	19	31.1	39.1	0.1	8
SW 122nd Ave	18	126.1	196.5	0.2	5
SW 117th Ave	4	92.8	135.0	0.5	13
Total		304.1	532.3	2.0	15

Arterial Level of Service: WB SW 152nd St #4

Cross Street	Node	Delay (s/veh)	Travel time (s)	Dist (mi)	Arterial Speed
SW 122nd Ave	18	13.6	51.0	0.5	35
SW 124th Ave	19	5.7	23.3	0.2	31
SW 127th Ave	3	10.7	19.0	0.1	17
SW 129th Ave	20	4.9	34.3	0.3	34
SW 132nd Ave	21	24.6	69.5	0.5	26
	41	4.1	25.8	0.2	32
SW 137th Ave	2	50.6	63.4	0.2	9
Total		114.4	286.2	2.0	25

Arterial Level of Service: EB SW 152nd St #3

Cross Street	Node	Delay (s/veh)	Travel time (s)	Dist (mi)	Arterial Speed
West Turnpike Ramp	5	4.9	17.2	0.1	28
East Turnpike Ramp	6	5.5	11.5	0.1	20
	63	3.8	11.9	0.1	30
SW 112th Ave	7	44.2	58.2	0.2	12
Total		58.4	98.8	0.5	18

Arterial Level of Service: WB SW 152nd St #3

Cross Street	Node	Delay (s/veh)	Travel time (s)	Dist (mi)	Arterial Speed
	63	19.4	35.3	0.2	20
East Turnpike Ramp	6	62.5	104.3	0.1	5
West Turnpike Ramp	5	71.3	77.1	0.1	3
SW 117th Ave	4	225.0	466.7	0.1	2
Total		378.2	683.6	0.5	4

Arterial Level of Service: EB SW 152nd St #2

Cross Street	Node	Delay (s/veh)	Travel time (s)	Dist (mi)	Arterial Speed
SW 107th Ave	8	8.2	48.7	0.5	38
SW 102nd Ave	17	53.4	91.8	0.5	20
SW 99th Ct	16	62.4	79.5	0.2	10
SW 93rd Ave	9	399.7	446.1	0.7	5
	80	50.8	55.1	0.1	4
	10	67.9	74.8	0.1	3
US 1 / S Dixie Hwy	11	59.7	62.2	0.0	3
Total		702.0	858.1	2.1	9

Arterial Level of Service: WB SW 152nd St #2

Cross Street	Node	Delay (s/veh)	Travel time (s)	Dist (mi)	Arterial Speed
SW 92nd Ave	10	4.3	9.8	0.0	16
	80	1.8	7.8	0.1	32
SW 93rd Ave	9	12.3	16.5	0.1	12
SW 99th Ct	16	5.2	56.1	0.7	44
SW 102nd Ave	17	15.5	32.0	0.2	24
SW 107th Ave	8	8.0	46.7	0.5	39
SW 112th Ave	7	39.3	79.3	0.5	23
Total		86.4	248.2	2.1	30

Arterial Level of Service: EB SW 152nd St #1

Cross Street	Node	Delay (s/veh)	Travel time (s)	Dist (mi)	Arterial Speed
	47	4.1	15.8	0.1	24
SW 87th Ave	12	9.6	42.1	0.4	31
SW 82nd Ave	13	27.3	76.8	0.5	24
SW 77th Ave	14	12.1	56.9	0.5	33
Old Cutler Rd	15	39.5	77.0	0.4	18
Total		92.6	268.6	1.9	25

Arterial Level of Service: WB SW 152nd St #1

Cross Street	Node	Delay (s/veh)	Travel time (s)	Dist (mi)	Arterial Speed
SW 77th Ave	14	8.1	35.7	0.4	38
SW 82nd Ave	13	23.9	68.5	0.5	27
SW 87th Ave	12	17.8	60.7	0.5	30
	47	5.2	41.9	0.4	31
US 1 / S Dixie Hwy	11	100.3	109.5	0.1	3
Total		155.4	316.3	1.9	21

Arterial Level of Service: EB SW 152nd St #5

Cross Street	Node	Delay (s/veh)	Travel time (s)	Dist (mi)	Arterial Speed
SW 152nd Ave	25	14.2	53.9	0.5	34
	64	3.1	11.9	0.1	28
	33	1.9	30.1	0.3	37
SW 147th Ave	24	5.4	14.0	0.1	26
SW 142nd Ave	23	17.3	60.3	0.5	30
Publix Entrance	22	8.1	42.1	0.4	34
SW 137th Ave	2	85.4	95.2	0.1	4
Total		135.4	307.6	2.0	24

Arterial Level of Service: WB SW 152nd St #5

Cross Street	Node	Delay (s/veh)	Travel time (s)	Dist (mi)	Arterial Speed
Publix Entrance	22	10.6	22.5	0.1	19
	23	20.0	54.3	0.4	26
SW 147th Ave	24	14.3	57.2	0.5	31
	33	2.2	11.7	0.1	31
	64	2.4	30.6	0.3	37
SW 152nd Ave	25	10.7	18.4	0.1	18
SW 157th Ave	1	27.5	69.9	0.5	26
Total		87.7	264.6	2.0	27

Arterial Level of Service: EB SW 152nd St #4

Cross Street	Node	Delay (s/veh)	Travel time (s)	Dist (mi)	Arterial Speed
	41	4.9	20.0	0.2	29
SW 132nd Ave	21	2.1	22.1	0.2	37
SW 129th Ave	20	4.3	48.7	0.5	38
SW 127th Ave	3	5.9	35.0	0.3	34
SW 124th Ave	19	2.6	10.7	0.1	29
SW 122nd Ave	18	9.9	27.7	0.2	26
SW 117th Ave	4	74.2	115.4	0.5	15
Total		103.9	279.6	2.0	26

Arterial Level of Service: WB SW 152nd St #4

Cross Street	Node	Delay (s/veh)	Travel time (s)	Dist (mi)	Arterial Speed
SW 122nd Ave	18	20.8	64.4	0.5	28
SW 124th Ave	19	5.5	23.2	0.2	31
SW 127th Ave	3	16.4	24.7	0.1	13
SW 129th Ave	20	9.1	38.4	0.3	30
SW 132nd Ave	21	27.2	72.7	0.5	25
	41	9.9	31.4	0.2	26
SW 137th Ave	2	83.9	96.5	0.2	6
Total		172.8	351.4	2.0	21

Arterial Level of Service: EB SW 152nd St #3

Cross Street	Node	Delay (s/veh)	Travel time (s)	Dist (mi)	Arterial Speed
West Turnpike Ramp	5	5.7	18.4	0.1	26
East Turnpike Ramp	6	11.1	17.1	0.1	14
	63	3.7	11.9	0.1	30
SW 112th Ave	7	29.0	42.9	0.2	16
Total		49.5	90.3	0.5	20

Arterial Level of Service: WB SW 152nd St #3

Cross Street	Node	Delay (s/veh)	Travel time (s)	Dist (mi)	Arterial Speed
	63	63.4	79.0	0.2	9
East Turnpike Ramp	6	53.2	61.2	0.1	6
West Turnpike Ramp	5	32.5	38.8	0.1	6
SW 117th Ave	4	127.1	242.1	0.1	4
Total		276.2	421.1	0.5	6

Arterial Level of Service: EB SW 152nd St #2

Cross Street	Node	Delay (s/veh)	Travel time (s)	Dist (mi)	Arterial Speed
SW 107th Ave	8	5.9	46.5	0.5	40
SW 102nd Ave	17	5.9	43.2	0.5	43
SW 99th Ct	16	3.6	21.3	0.2	36
SW 93rd Ave	9	6.1	59.9	0.7	41
	79	7.7	12.1	0.1	16
	10	48.6	63.5	0.1	5
US 1 / S Dixie Hwy	11	98.5	101.8	0.0	2
Total		176.4	348.3	2.1	22

Arterial Level of Service: WB SW 152nd St #2

Cross Street	Node	Delay (s/veh)	Travel time (s)	Dist (mi)	Arterial Speed
SW 92nd Ave	10	4.7	10.1	0.0	15
	79	4.6	10.6	0.1	24
SW 93rd Ave	9	13.0	17.3	0.1	11
SW 99th Ct	16	11.6	62.7	0.7	39
SW 102nd Ave	17	19.8	36.3	0.2	21
SW 107th Ave	8	18.0	58.7	0.5	31
SW 112th Ave	7	90.8	129.8	0.5	14
Total		162.4	325.4	2.1	23

Arterial Level of Service: EB SW 152nd St #1

Cross Street	Node	Delay (s/veh)	Travel time (s)	Dist (mi)	Arterial Speed
	47	4.0	15.6	0.1	24
SW 87th Ave	12	11.2	47.1	0.4	27
SW 82nd Ave	13	40.8	89.0	0.5	21
SW 77th Ave	14	7.7	41.1	0.5	45
Old Cutler Rd	15	33.0	67.8	0.4	20
Total		96.7	260.6	1.9	26

Arterial Level of Service: WB SW 152nd St #1

Cross Street	Node	Delay (s/veh)	Travel time (s)	Dist (mi)	Arterial Speed
SW 77th Ave	14	21.5	54.7	0.4	25
SW 82nd Ave	13	25.7	70.3	0.5	26
SW 87th Ave	12	17.4	69.0	0.5	27
	47	16.9	53.6	0.4	24
US 1 / S Dixie Hwy	11	119.0	128.0	0.1	3
Total		200.5	375.7	1.9	18

Arterial Level of Service: EB SW 152nd St #5

Cross Street	Node	Delay (s/veh)	Travel time (s)	Dist (mi)	Arterial Speed
SW 152nd Ave	25	46.3	88.8	0.5	21
	64	4.0	12.9	0.1	26
	33	4.5	32.6	0.3	35
SW 147th Ave	24	11.7	20.9	0.1	18
SW 142nd Ave	23	225.8	279.5	0.5	7
Publix Entrance	22	372.2	528.9	0.4	4
SW 137th Ave	2	90.1	100.1	0.1	4
Total		754.6	1063.6	2.0	8

Arterial Level of Service: WB SW 152nd St #5

Cross Street	Node	Delay (s/veh)	Travel time (s)	Dist (mi)	Arterial Speed
Publix Entrance	22	6.2	17.5	0.1	24
	23	11.1	45.2	0.4	31
SW 147th Ave	24	10.5	53.6	0.5	33
	33	1.7	11.3	0.1	32
	64	8.3	36.4	0.3	31
SW 152nd Ave	25	32.3	44.0	0.1	8
SW 157th Ave	1	164.0	283.5	0.5	9
Total		234.1	491.5	2.0	18

Arterial Level of Service: EB SW 152nd St #4

Cross Street	Node	Delay (s/veh)	Travel time (s)	Dist (mi)	Arterial Speed
	41	4.9	19.9	0.2	29
SW 132nd Ave	21	3.5	22.7	0.2	36
SW 129th Ave	20	5.7	49.9	0.5	37
SW 127th Ave	3	80.1	108.2	0.3	11
SW 124th Ave	19	33.7	41.7	0.1	8
SW 122nd Ave	18	130.1	219.1	0.2	5
SW 117th Ave	4	93.4	135.3	0.5	13
Total		351.5	596.8	2.0	14

Arterial Level of Service: WB SW 152nd St #4

Cross Street	Node	Delay (s/veh)	Travel time (s)	Dist (mi)	Arterial Speed
SW 122nd Ave	18	12.0	49.6	0.5	36
SW 124th Ave	19	5.9	23.4	0.2	31
SW 127th Ave	3	9.2	17.4	0.1	18
SW 129th Ave	20	4.8	34.4	0.3	34
SW 132nd Ave	21	21.7	65.9	0.5	28
	41	3.8	25.5	0.2	32
SW 137th Ave	2	49.0	61.8	0.2	9
Total		106.4	278.1	2.0	26

Arterial Level of Service: EB SW 152nd St #3

Cross Street	Node	Delay (s/veh)	Travel time (s)	Dist (mi)	Arterial Speed
West Turnpike Ramp	5	5.4	17.8	0.1	27
East Turnpike Ramp	6	6.0	12.0	0.1	20
	63	3.8	11.9	0.1	30
SW 112th Ave	7	46.2	60.3	0.2	12
Total		61.4	102.0	0.5	17

Arterial Level of Service: WB SW 152nd St #3

Cross Street	Node	Delay (s/veh)	Travel time (s)	Dist (mi)	Arterial Speed
	63	74.0	89.6	0.2	8
East Turnpike Ramp	6	88.8	180.9	0.1	4
West Turnpike Ramp	5	82.4	88.1	0.1	3
SW 117th Ave	4	230.8	640.3	0.1	2
Total		476.0	998.8	0.5	3

Arterial Level of Service: EB SW 152nd St #2

Cross Street	Node	Delay (s/veh)	Travel time (s)	Dist (mi)	Arterial Speed
SW 107th Ave	8	7.2	47.3	0.5	39
SW 102nd Ave	17	45.8	86.0	0.5	22
SW 99th Ct	16	52.5	69.7	0.2	11
SW 93rd Ave	9	355.8	404.0	0.7	6
	80	46.6	50.9	0.1	4
	10	66.6	72.9	0.1	3
US 1 / S Dixie Hwy	11	51.6	54.1	0.0	3
Total		626.1	784.9	2.1	10

Arterial Level of Service: WB SW 152nd St #2

Cross Street	Node	Delay (s/veh)	Travel time (s)	Dist (mi)	Arterial Speed
SW 92nd Ave	10	4.2	9.5	0.0	16
	80	1.9	7.9	0.1	32
SW 93rd Ave	9	17.3	21.6	0.1	9
SW 99th Ct	16	6.9	56.8	0.7	43
SW 102nd Ave	17	14.0	30.6	0.2	25
SW 107th Ave	8	7.6	46.3	0.5	40
SW 112th Ave	7	97.2	136.6	0.5	13
Total		149.1	309.3	2.1	24

Arterial Level of Service: EB SW 152nd St #1

Cross Street	Node	Delay (s/veh)	Travel time (s)	Dist (mi)	Arterial Speed
	47	4.2	16.0	0.1	23
SW 87th Ave	12	9.4	41.5	0.4	31
SW 82nd Ave	13	27.1	77.5	0.5	24
SW 77th Ave	14	11.4	56.9	0.5	32
Old Cutler Rd	15	37.9	75.0	0.4	18
Total		90.0	266.8	1.9	25

Arterial Level of Service: WB SW 152nd St #1

Cross Street	Node	Delay (s/veh)	Travel time (s)	Dist (mi)	Arterial Speed
SW 77th Ave	14	7.7	35.4	0.4	39
SW 82nd Ave	13	24.8	69.1	0.5	27
SW 87th Ave	12	15.3	57.7	0.5	32
	47	5.2	42.1	0.4	31
US 1 / S Dixie Hwy	11	114.7	124.1	0.1	3
Total		167.8	328.4	1.9	20

Arterial Level of Service: EB SW 152nd St #5

Cross Street	Node	Delay (s/veh)	Travel time (s)	Dist (mi)	Arterial Speed
SW 152nd Ave	25	16.2	56.6	0.5	32
	64	3.3	12.2	0.1	28
	33	2.0	30.2	0.3	37
SW 147th Ave	24	5.6	14.2	0.1	26
SW 142nd Ave	23	20.9	63.6	0.5	28
Publix Entrance	22	24.0	58.0	0.4	24
SW 137th Ave	2	61.4	71.3	0.1	6
Total		133.5	306.2	2.0	24

Arterial Level of Service: WB SW 152nd St #5

Cross Street	Node	Delay (s/veh)	Travel time (s)	Dist (mi)	Arterial Speed
Publix Entrance	22	15.7	27.5	0.1	15
	23	10.6	44.5	0.4	32
SW 147th Ave	24	10.2	52.8	0.5	34
	33	1.4	11.0	0.1	33
	64	2.5	30.7	0.3	37
SW 152nd Ave	25	11.5	19.1	0.1	18
SW 157th Ave	1	29.7	73.9	0.5	25
Total		81.7	259.7	2.0	28

Arterial Level of Service: EB SW 152nd St #4

Cross Street	Node	Delay (s/veh)	Travel time (s)	Dist (mi)	Arterial Speed
	41	5.3	20.4	0.2	29
SW 132nd Ave	21	6.1	25.8	0.2	32
SW 129th Ave	20	7.9	52.2	0.5	35
SW 127th Ave	3	12.3	41.5	0.3	28
SW 124th Ave	19	6.9	15.0	0.1	21
SW 122nd Ave	18	24.3	42.1	0.2	17
SW 117th Ave	4	115.7	156.9	0.5	11
Total		178.4	353.9	2.0	20

Arterial Level of Service: WB SW 152nd St #4

Cross Street	Node	Delay (s/veh)	Travel time (s)	Dist (mi)	Arterial Speed
SW 122nd Ave	18	18.4	61.7	0.5	29
SW 124th Ave	19	5.7	23.3	0.2	31
SW 127th Ave	3	10.2	18.4	0.1	17
SW 129th Ave	20	7.6	37.0	0.3	32
SW 132nd Ave	21	10.0	54.9	0.5	33
	41	7.5	29.2	0.2	28
SW 137th Ave	2	87.5	100.5	0.2	6
Total		146.9	325.0	2.0	22

Arterial Level of Service: EB SW 152nd St #3

Cross Street	Node	Delay (s/veh)	Travel time (s)	Dist (mi)	Arterial Speed
West Turnpike Ramp	5	5.7	18.4	0.1	27
East Turnpike Ramp	6	10.1	15.9	0.1	15
	63	3.4	11.5	0.1	31
SW 112th Ave	7	27.8	41.6	0.2	17
Total		47.0	87.4	0.5	20

Arterial Level of Service: WB SW 152nd St #3

Cross Street	Node	Delay (s/veh)	Travel time (s)	Dist (mi)	Arterial Speed
	63	91.5	107.3	0.2	6
East Turnpike Ramp	6	60.5	68.3	0.1	5
West Turnpike Ramp	5	34.2	40.8	0.1	6
SW 117th Ave	4	134.2	403.7	0.1	3
Total		320.4	620.1	0.5	5

Arterial Level of Service: EB SW 152nd St #2

Cross Street	Node	Delay (s/veh)	Travel time (s)	Dist (mi)	Arterial Speed
SW 107th Ave	8	9.5	50.9	0.5	36
SW 102nd Ave	17	14.5	52.7	0.5	35
SW 99th Ct	16	4.1	21.6	0.2	35
SW 93rd Ave	9	9.2	62.0	0.7	39
	79	8.2	12.6	0.1	16
	10	41.4	51.1	0.1	5
US 1 / S Dixie Hwy	11	97.4	99.9	0.0	2
Total		184.3	350.8	2.1	22

Arterial Level of Service: WB SW 152nd St #2

Cross Street	Node	Delay (s/veh)	Travel time (s)	Dist (mi)	Arterial Speed
SW 92nd Ave	10	4.8	10.3	0.0	15
	79	7.4	13.2	0.1	19
SW 93rd Ave	9	22.6	26.9	0.1	7
SW 99th Ct	16	12.6	63.9	0.7	38
SW 102nd Ave	17	18.8	35.4	0.2	22
SW 107th Ave	8	72.0	111.0	0.5	17
SW 112th Ave	7	277.6	314.3	0.5	6
Total		415.9	575.0	2.1	13

Arterial Level of Service: EB SW 152nd St #1

Cross Street	Node	Delay (s/veh)	Travel time (s)	Dist (mi)	Arterial Speed
	47	4.2	15.9	0.1	24
SW 87th Ave	12	11.0	47.4	0.4	27
SW 82nd Ave	13	46.0	93.9	0.5	20
SW 77th Ave	14	7.4	40.4	0.5	46
Old Cutler Rd	15	40.7	79.2	0.4	17
Total		109.3	276.8	1.9	24

Arterial Level of Service: WB SW 152nd St #1

Cross Street	Node	Delay (s/veh)	Travel time (s)	Dist (mi)	Arterial Speed
SW 77th Ave	14	20.2	52.5	0.4	26
SW 82nd Ave	13	28.2	73.5	0.5	25
SW 87th Ave	12	17.6	69.0	0.5	27
	47	28.3	65.1	0.4	20
US 1 / S Dixie Hwy	11	159.8	168.8	0.1	2
Total		254.1	428.9	1.9	16

Arterial Level of Service: EB SW 152nd St #5

Cross Street	Node	Delay (s/veh)	Travel time (s)	Dist (mi)	Arterial Speed
SW 152nd Ave	25	71.8	121.0	0.5	16
	64	3.9	12.6	0.1	27
	33	2.1	30.3	0.3	37
SW 147th Ave	24	5.0	13.5	0.1	27
SW 142nd Ave	23	15.3	58.2	0.5	31
Publix Entrance	22	81.9	115.5	0.4	12
SW 137th Ave	2	107.3	117.5	0.1	4
Total		287.3	468.6	2.0	16

Arterial Level of Service: WB SW 152nd St #5

Cross Street	Node	Delay (s/veh)	Travel time (s)	Dist (mi)	Arterial Speed
Publix Entrance	22	4.8	16.3	0.1	26
	23	9.3	43.2	0.4	33
SW 147th Ave	24	10.6	53.5	0.5	33
	33	1.6	11.1	0.1	33
	64	8.8	36.8	0.3	31
SW 152nd Ave	25	28.2	37.6	0.1	9
SW 157th Ave	1	122.7	208.5	0.5	11
Total		186.1	407.0	2.0	20

Arterial Level of Service: EB SW 152nd St #4

Cross Street	Node	Delay (s/veh)	Travel time (s)	Dist (mi)	Arterial Speed
	41	5.1	20.2	0.2	29
SW 132nd Ave	21	2.4	22.0	0.2	38
SW 129th Ave	20	23.4	67.4	0.5	27
SW 127th Ave	3	147.3	174.7	0.3	7
SW 124th Ave	19	43.7	51.8	0.1	6
SW 122nd Ave	18	155.8	257.2	0.2	4
	82	221.6	257.4	0.4	6
	81	24.5	28.6	0.0	5
SW 117th Ave	4	10.5	11.7	0.0	9
Total		634.2	891.0	2.0	9

Arterial Level of Service: WB SW 152nd St #4

Cross Street	Node	Delay (s/veh)	Travel time (s)	Dist (mi)	Arterial Speed
	81	3.5	6.6	0.0	16
	82	2.3	6.3	0.0	21
SW 122nd Ave	18	10.3	46.1	0.4	33
SW 124th Ave	19	7.3	24.9	0.2	29
SW 127th Ave	3	20.0	28.2	0.1	11
SW 129th Ave	20	7.2	36.6	0.3	32
SW 132nd Ave	21	12.5	57.1	0.5	32
	41	5.8	27.3	0.2	30
SW 137th Ave	2	42.7	55.2	0.2	11
Total		111.5	288.5	2.0	25

Arterial Level of Service: EB SW 152nd St #3

Cross Street	Node	Delay (s/veh)	Travel time (s)	Dist (mi)	Arterial Speed
West Turnpike Ramp	5	5.4	17.8	0.1	27
East Turnpike Ramp	6	3.0	9.1	0.1	26
	63	3.5	16.5	0.2	35
SW 112th Ave	7	35.9	45.3	0.1	11
Total		47.9	88.8	0.5	20

Arterial Level of Service: WB SW 152nd St #3

Cross Street	Node	Delay (s/veh)	Travel time (s)	Dist (mi)	Arterial Speed
	63	5.9	17.0	0.1	28
East Turnpike Ramp	6	31.7	44.1	0.2	13
West Turnpike Ramp	5	11.0	16.7	0.1	14
SW 117th Ave	4	133.4	183.3	0.1	3
Total		182.0	261.0	0.5	8

Arterial Level of Service: EB SW 152nd St #2

Cross Street	Node	Delay (s/veh)	Travel time (s)	Dist (mi)	Arterial Speed
SW 107th Ave	8	8.3	48.4	0.5	38
SW 102nd Ave	17	17.5	55.8	0.5	33
SW 99th Ct	16	32.7	50.0	0.2	15
SW 93rd Ave	9	300.7	348.9	0.7	7
	79	47.4	51.7	0.1	4
	10	84.1	89.8	0.1	3
US 1 / S Dixie Hwy	11	65.2	67.7	0.0	2
Total		555.9	712.3	2.1	11

Arterial Level of Service: WB SW 152nd St #2

Cross Street	Node	Delay (s/veh)	Travel time (s)	Dist (mi)	Arterial Speed
SW 92nd Ave	10	4.4	9.8	0.0	16
	79	1.8	7.8	0.1	32
SW 93rd Ave	9	12.9	17.2	0.1	11
SW 99th Ct	16	5.5	56.7	0.7	43
SW 102nd Ave	17	15.5	32.1	0.2	24
SW 107th Ave	8	8.6	47.3	0.5	39
SW 112th Ave	7	48.5	88.8	0.5	21
Total		97.2	259.7	2.1	29

Arterial Level of Service: EB SW 152nd St #1

Cross Street	Node	Delay (s/veh)	Travel time (s)	Dist (mi)	Arterial Speed
	47	4.5	16.3	0.1	23
SW 87th Ave	12	10.4	42.8	0.4	30
SW 82nd Ave	13	29.2	78.8	0.5	23
SW 77th Ave	14	12.4	57.4	0.5	32
Old Cutler Rd	15	33.0	70.0	0.4	19
Total		89.5	265.3	1.9	25

Arterial Level of Service: WB SW 152nd St #1

Cross Street	Node	Delay (s/veh)	Travel time (s)	Dist (mi)	Arterial Speed
SW 77th Ave	14	7.5	35.1	0.4	39
SW 82nd Ave	13	23.5	67.7	0.5	27
SW 87th Ave	12	17.7	61.6	0.5	30
	47	4.6	41.2	0.4	31
US 1 / S Dixie Hwy	11	95.3	104.5	0.1	4
Total		148.6	310.2	1.9	22

Arterial Level of Service: EB SW 152nd St #5

Cross Street	Node	Delay (s/veh)	Travel time (s)	Dist (mi)	Arterial Speed
SW 152nd Ave	25	169.3	242.1	0.5	9
	64	4.5	13.3	0.1	25
	33	2.8	30.9	0.3	36
SW 147th Ave	24	9.0	17.6	0.1	21
SW 142nd Ave	23	133.9	180.9	0.5	10
Publix Entrance	22	282.1	371.7	0.4	5
SW 137th Ave	2	100.9	110.8	0.1	4
Total		702.6	967.2	2.0	8

Arterial Level of Service: WB SW 152nd St #5

Cross Street	Node	Delay (s/veh)	Travel time (s)	Dist (mi)	Arterial Speed
Publix Entrance	22	5.3	16.6	0.1	25
	23	17.3	51.9	0.4	27
SW 147th Ave	24	13.3	55.9	0.5	32
	33	1.6	11.2	0.1	33
	64	21.8	49.7	0.3	23
SW 152nd Ave	25	37.1	54.3	0.1	8
SW 157th Ave	1	171.4	365.7	0.5	9
Total		267.8	605.4	2.0	16

Arterial Level of Service: EB SW 152nd St #4

Cross Street	Node	Delay (s/veh)	Travel time (s)	Dist (mi)	Arterial Speed
	41	5.1	20.0	0.2	29
SW 132nd Ave	21	3.8	23.0	0.2	36
SW 129th Ave	20	37.0	81.1	0.5	23
SW 127th Ave	3	196.9	224.3	0.3	5
SW 124th Ave	19	48.4	56.5	0.1	6
SW 122nd Ave	18	160.3	289.1	0.2	4
	82	213.1	248.9	0.4	6
	81	23.9	28.1	0.0	5
SW 117th Ave	4	11.3	12.6	0.0	9
Total		699.8	983.5	2.0	8

Arterial Level of Service: WB SW 152nd St #4

Cross Street	Node	Delay (s/veh)	Travel time (s)	Dist (mi)	Arterial Speed
	81	3.4	6.6	0.0	17
	82	2.2	6.3	0.0	21
SW 122nd Ave	18	16.2	51.8	0.4	30
SW 124th Ave	19	6.9	24.4	0.2	30
SW 127th Ave	3	14.5	22.7	0.1	14
SW 129th Ave	20	8.2	38.0	0.3	31
SW 132nd Ave	21	13.5	57.7	0.5	32
	41	4.2	25.9	0.2	32
SW 137th Ave	2	43.9	56.6	0.2	10
Total		113.2	289.9	2.0	25

Arterial Level of Service: EB SW 152nd St #3

Cross Street	Node	Delay (s/veh)	Travel time (s)	Dist (mi)	Arterial Speed
West Turnpike Ramp	5	4.9	17.2	0.1	28
East Turnpike Ramp	6	6.0	12.2	0.1	19
	63	5.7	18.7	0.2	31
SW 112th Ave	7	36.9	46.2	0.1	10
Total		53.5	94.3	0.5	19

Arterial Level of Service: WB SW 152nd St #3

Cross Street	Node	Delay (s/veh)	Travel time (s)	Dist (mi)	Arterial Speed
	63	13.8	24.9	0.1	19
East Turnpike Ramp	6	58.6	91.0	0.2	8
West Turnpike Ramp	5	52.5	58.2	0.1	4
SW 117th Ave	4	201.6	448.0	0.1	2
Total		326.6	622.1	0.5	5

Arterial Level of Service: EB SW 152nd St #2

Cross Street	Node	Delay (s/veh)	Travel time (s)	Dist (mi)	Arterial Speed
SW 107th Ave	8	7.3	47.8	0.5	39
SW 102nd Ave	17	15.4	53.6	0.5	34
SW 99th Ct	16	6.7	24.2	0.2	32
SW 93rd Ave	9	202.0	251.8	0.7	10
	79	44.1	48.4	0.1	4
	10	76.2	81.9	0.1	3
US 1 / S Dixie Hwy	11	58.6	61.0	0.0	3
Total		410.2	568.7	2.1	13

Arterial Level of Service: WB SW 152nd St #2

Cross Street	Node	Delay (s/veh)	Travel time (s)	Dist (mi)	Arterial Speed
SW 92nd Ave	10	4.3	9.8	0.0	16
	79	2.0	8.0	0.1	32
SW 93rd Ave	9	16.9	21.1	0.1	9
SW 99th Ct	16	6.0	56.5	0.7	43
SW 102nd Ave	17	15.3	31.9	0.2	24
SW 107th Ave	8	9.1	47.4	0.5	39
SW 112th Ave	7	58.4	97.8	0.5	19
Total		111.9	272.5	2.1	27

Arterial Level of Service: EB SW 152nd St #1

Cross Street	Node	Delay (s/veh)	Travel time (s)	Dist (mi)	Arterial Speed
	47	4.2	15.9	0.1	24
SW 87th Ave	12	9.0	41.7	0.4	31
SW 82nd Ave	13	25.8	75.5	0.5	24
SW 77th Ave	14	11.2	56.6	0.5	33
Old Cutler Rd	15	39.4	77.1	0.4	18
Total		89.5	266.8	1.9	25

Arterial Level of Service: WB SW 152nd St #1

Cross Street	Node	Delay (s/veh)	Travel time (s)	Dist (mi)	Arterial Speed
SW 77th Ave	14	9.2	37.0	0.4	37
SW 82nd Ave	13	23.6	66.4	0.5	28
SW 87th Ave	12	15.6	58.6	0.5	31
	47	10.6	47.4	0.4	27
US 1 / S Dixie Hwy	11	130.0	139.5	0.1	3
Total		189.1	348.9	1.9	19

Arterial Level of Service: EB SW 152nd St #5

Cross Street	Node	Delay (s/veh)	Travel time (s)	Dist (mi)	Arterial Speed
SW 152nd Ave	25	15.6	56.4	0.5	32
	64	3.2	12.1	0.1	28
	33	2.0	30.2	0.3	37
SW 147th Ave	24	5.7	14.2	0.1	26
SW 142nd Ave	23	17.5	60.2	0.5	30
Publix Entrance	22	6.1	40.2	0.4	35
SW 137th Ave	2	59.9	69.8	0.1	6
Total		110.0	283.1	2.0	26

Arterial Level of Service: WB SW 152nd St #5

Cross Street	Node	Delay (s/veh)	Travel time (s)	Dist (mi)	Arterial Speed
Publix Entrance	22	10.1	22.1	0.1	19
	23	23.8	57.8	0.4	25
SW 147th Ave	24	14.9	57.3	0.5	31
	33	1.9	11.4	0.1	32
	64	2.6	30.8	0.3	37
SW 152nd Ave	25	10.9	18.5	0.1	18
SW 157th Ave	1	27.8	69.8	0.5	26
Total		91.9	267.8	2.0	27

Arterial Level of Service: EB SW 152nd St #4

Cross Street	Node	Delay (s/veh)	Travel time (s)	Dist (mi)	Arterial Speed
	41	4.8	19.9	0.2	29
SW 132nd Ave	21	2.5	22.3	0.2	37
SW 129th Ave	20	7.0	51.6	0.5	36
SW 127th Ave	3	6.0	34.8	0.3	34
SW 124th Ave	19	3.5	11.6	0.1	27
SW 122nd Ave	18	5.4	23.2	0.2	31
	82	13.4	51.5	0.4	30
	81	29.2	33.3	0.0	4
SW 117th Ave	4	13.9	15.1	0.0	7
Total		85.6	263.4	2.0	27

Arterial Level of Service: WB SW 152nd St #4

Cross Street	Node	Delay (s/veh)	Travel time (s)	Dist (mi)	Arterial Speed
	81	3.3	6.5	0.0	17
	82	2.2	6.2	0.0	22
SW 122nd Ave	18	16.4	54.0	0.4	28
SW 124th Ave	19	5.9	23.6	0.2	31
SW 127th Ave	3	8.7	16.9	0.1	19
SW 129th Ave	20	7.1	36.9	0.3	32
SW 132nd Ave	21	20.1	64.9	0.5	28
	41	13.2	34.8	0.2	24
SW 137th Ave	2	96.3	109.3	0.2	5
Total		173.2	353.1	2.0	21

Arterial Level of Service: EB SW 152nd St #3

Cross Street	Node	Delay (s/veh)	Travel time (s)	Dist (mi)	Arterial Speed
West Turnpike Ramp	5	4.7	17.4	0.1	28
East Turnpike Ramp	6	6.5	12.6	0.1	19
	63	5.6	18.6	0.2	31
SW 112th Ave	7	52.6	61.8	0.1	8
Total		69.5	110.4	0.5	16

Arterial Level of Service: WB SW 152nd St #3

Cross Street	Node	Delay (s/veh)	Travel time (s)	Dist (mi)	Arterial Speed
	63	10.2	21.3	0.1	22
East Turnpike Ramp	6	57.3	70.1	0.2	8
West Turnpike Ramp	5	31.8	37.9	0.1	6
SW 117th Ave	4	84.9	102.7	0.1	5
Total		184.1	232.0	0.5	8

Arterial Level of Service: EB SW 152nd St #2

Cross Street	Node	Delay (s/veh)	Travel time (s)	Dist (mi)	Arterial Speed
SW 107th Ave	8	6.6	47.2	0.5	39
SW 102nd Ave	17	7.2	45.0	0.5	41
SW 99th Ct	16	3.7	21.2	0.2	36
SW 93rd Ave	9	35.4	88.9	0.7	27
	79	37.6	42.0	0.1	5
	10	102.1	108.6	0.1	2
US 1 / S Dixie Hwy	11	123.8	131.7	0.0	1
Total		316.5	484.6	2.1	16

Arterial Level of Service: WB SW 152nd St #2

Cross Street	Node	Delay (s/veh)	Travel time (s)	Dist (mi)	Arterial Speed
SW 92nd Ave	10	4.6	10.0	0.0	16
	79	5.4	11.4	0.1	22
SW 93rd Ave	9	15.7	20.0	0.1	10
SW 99th Ct	16	11.8	62.8	0.7	39
SW 102nd Ave	17	18.9	35.5	0.2	22
SW 107th Ave	8	17.3	57.9	0.5	32
SW 112th Ave	7	49.9	89.3	0.5	21
Total		123.5	287.0	2.1	26

Arterial Level of Service: EB SW 152nd St #1

Cross Street	Node	Delay (s/veh)	Travel time (s)	Dist (mi)	Arterial Speed
	47	4.1	15.9	0.1	24
SW 87th Ave	12	10.2	46.0	0.4	28
SW 82nd Ave	13	44.1	92.1	0.5	20
SW 77th Ave	14	8.9	43.8	0.5	42
Old Cutler Rd	15	36.3	73.3	0.4	19
Total		103.6	271.1	1.9	25

Arterial Level of Service: WB SW 152nd St #1

Cross Street	Node	Delay (s/veh)	Travel time (s)	Dist (mi)	Arterial Speed
SW 77th Ave	14	20.3	53.2	0.4	26
SW 82nd Ave	13	27.7	73.2	0.5	25
SW 87th Ave	12	18.1	69.2	0.5	26
	47	5.5	42.0	0.4	31
US 1 / S Dixie Hwy	11	82.5	91.4	0.1	4
Total		154.2	329.0	1.9	20

Arterial Level of Service: EB SW 152nd St #5

Cross Street	Node	Delay (s/veh)	Travel time (s)	Dist (mi)	Arterial Speed
SW 152nd Ave	25	16.1	55.5	0.5	33
	64	3.3	12.1	0.1	28
	33	2.1	30.2	0.3	37
SW 147th Ave	24	4.7	13.2	0.1	28
SW 142nd Ave	23	18.8	61.1	0.5	29
Publix Entrance	22	11.8	45.5	0.4	31
SW 137th Ave	2	57.1	66.9	0.1	6
Total		113.9	284.6	2.0	26

Arterial Level of Service: WB SW 152nd St #5

Cross Street	Node	Delay (s/veh)	Travel time (s)	Dist (mi)	Arterial Speed
Publix Entrance	22	18.2	30.2	0.1	14
	23	22.7	56.8	0.4	25
SW 147th Ave	24	14.3	56.8	0.5	31
	33	2.8	12.4	0.1	30
	64	3.1	31.4	0.3	36
SW 152nd Ave	25	13.0	20.5	0.1	16
SW 157th Ave	1	33.5	78.4	0.5	23
Total		107.5	286.4	2.0	25

Arterial Level of Service: EB SW 152nd St #4

Cross Street	Node	Delay (s/veh)	Travel time (s)	Dist (mi)	Arterial Speed
	41	4.9	20.1	0.2	29
SW 132nd Ave	21	3.0	22.9	0.2	36
SW 129th Ave	20	8.3	52.9	0.5	35
SW 127th Ave	3	5.6	34.5	0.3	34
SW 124th Ave	19	4.1	12.2	0.1	26
SW 122nd Ave	18	6.8	24.7	0.2	30
	82	34.3	72.1	0.4	21
	81	36.7	40.8	0.0	3
SW 117th Ave	4	14.5	15.8	0.0	7
Total		118.2	296.0	2.0	24

Arterial Level of Service: WB SW 152nd St #4

Cross Street	Node	Delay (s/veh)	Travel time (s)	Dist (mi)	Arterial Speed
	81	3.2	6.4	0.0	17
	82	2.2	6.2	0.0	22
SW 122nd Ave	18	17.2	54.8	0.4	28
SW 124th Ave	19	6.5	24.2	0.2	30
SW 127th Ave	3	8.7	16.9	0.1	19
SW 129th Ave	20	7.5	37.3	0.3	31
SW 132nd Ave	21	47.9	92.3	0.5	20
	41	122.4	143.5	0.2	6
SW 137th Ave	2	152.6	166.5	0.2	4
Total		368.1	548.1	2.0	13

Arterial Level of Service: EB SW 152nd St #3

Cross Street	Node	Delay (s/veh)	Travel time (s)	Dist (mi)	Arterial Speed
West Turnpike Ramp	5	4.9	17.6	0.1	28
East Turnpike Ramp	6	6.6	12.7	0.1	18
	63	3.7	16.7	0.2	35
SW 112th Ave	7	38.0	47.2	0.1	10
Total		53.2	94.3	0.5	19

Arterial Level of Service: WB SW 152nd St #3

Cross Street	Node	Delay (s/veh)	Travel time (s)	Dist (mi)	Arterial Speed
	63	6.0	17.2	0.1	28
East Turnpike Ramp	6	11.1	24.0	0.2	24
West Turnpike Ramp	5	18.4	24.1	0.1	10
SW 117th Ave	4	95.0	124.5	0.1	5
Total		130.6	189.8	0.5	10

Arterial Level of Service: EB SW 152nd St #2

Cross Street	Node	Delay (s/veh)	Travel time (s)	Dist (mi)	Arterial Speed
SW 107th Ave	8	6.4	46.9	0.5	39
SW 102nd Ave	17	6.4	43.9	0.5	42
SW 99th Ct	16	3.7	21.3	0.2	36
SW 93rd Ave	9	21.7	74.9	0.7	33
	79	33.7	38.0	0.1	5
	10	94.2	100.8	0.1	3
US 1 / S Dixie Hwy	11	108.4	110.9	0.0	1
Total		274.5	436.7	2.1	17

Arterial Level of Service: WB SW 152nd St #2

Cross Street	Node	Delay (s/veh)	Travel time (s)	Dist (mi)	Arterial Speed
SW 92nd Ave	10	4.8	10.3	0.0	15
	79	7.0	12.9	0.1	19
SW 93rd Ave	9	18.4	22.7	0.1	9
SW 99th Ct	16	14.3	65.3	0.7	37
SW 102nd Ave	17	20.7	37.2	0.2	21
SW 107th Ave	8	19.3	59.9	0.5	31
SW 112th Ave	7	58.2	97.8	0.5	19
Total		142.6	306.1	2.1	24

Arterial Level of Service: EB SW 152nd St #1

Cross Street	Node	Delay (s/veh)	Travel time (s)	Dist (mi)	Arterial Speed
	47	4.0	15.6	0.1	24
SW 87th Ave	12	12.5	48.4	0.4	27
SW 82nd Ave	13	42.6	91.2	0.5	20
SW 77th Ave	14	8.5	42.6	0.5	43
Old Cutler Rd	15	33.7	65.2	0.4	21
Total		101.3	263.1	1.9	25

Arterial Level of Service: WB SW 152nd St #1

Cross Street	Node	Delay (s/veh)	Travel time (s)	Dist (mi)	Arterial Speed
SW 77th Ave	14	22.0	54.7	0.4	25
SW 82nd Ave	13	29.1	73.8	0.5	25
SW 87th Ave	12	18.4	69.8	0.5	26
	47	17.3	53.6	0.4	24
US 1 / S Dixie Hwy	11	146.9	156.1	0.1	2
Total		233.7	408.0	1.9	16

Movement	EBL	EBT	EBR	WBL	WBT	WBR	NBL	NBT	NBR	SBL	SBT	SBR
Lane Configurations												
Traffic Volume (veh/h)	90	255	104	45	275	723	223	968	46	279	652	31
Future Volume (veh/h)	90	255	104	45	275	723	223	968	46	279	652	31
Number	5	2	12	1	6	16	3	8	18	7	4	14
Initial Q (Qb), veh	0	0	0	0	0	0	0	0	0	0	0	0
Ped-Bike Adj(A_pbT)	1.00		1.00	1.00		1.00	1.00		1.00	1.00		1.00
Parking Bus, Adj	1.00	1.00	1.00	1.00	1.00	1.00	1.00	1.00	1.00	1.00	1.00	1.00
Adj Sat Flow, veh/h/ln	1863	1863	1900	1863	1863	1863	1863	1863	1900	1863	1863	1900
Adj Flow Rate, veh/h	130	287	130	64	458	822	328	1088	58	328	724	48
Adj No. of Lanes	1	1	0	1	1	1	1	2	0	1	2	0
Peak Hour Factor	0.69	0.89	0.80	0.70	0.60	0.88	0.68	0.89	0.79	0.85	0.90	0.64
Percent Heavy Veh, %	2	2	2	2	2	2	2	2	2	2	2	2
Cap, veh/h	173	432	196	259	658	559	397	1062	57	325	1095	73
Arrive On Green	0.04	0.36	0.36	0.03	0.35	0.35	0.14	0.31	0.31	0.16	0.32	0.32
Sat Flow, veh/h	1774	1215	550	1774	1863	1583	1774	3418	182	1774	3370	223
Grp Volume(v), veh/h	130	0	417	64	458	822	328	563	583	328	380	392
Grp Sat Flow(s),veh/h/ln	1774	0	1766	1774	1863	1583	1774	1770	1831	1774	1770	1823
Q Serve(g_s), s	5.4	0.0	29.9	3.4	31.6	53.0	18.6	46.6	46.6	23.4	27.7	27.7
Cycle Q Clear(g_c), s	5.4	0.0	29.9	3.4	31.6	53.0	18.6	46.6	46.6	23.4	27.7	27.7
Prop In Lane	1.00		0.31	1.00		1.00	1.00		0.10	1.00		0.12
Lane Grp Cap(c), veh/h	173	0	628	259	658	559	397	550	569	325	575	593
V/C Ratio(X)	0.75	0.00	0.66	0.25	0.70	1.47	0.83	1.02	1.02	1.01	0.66	0.66
Avail Cap(c_a), veh/h	173	0	628	265	658	559	479	550	569	325	575	593
HCM Platoon Ratio	1.00	1.00	1.00	1.00	1.00	1.00	1.00	1.00	1.00	1.00	1.00	1.00
Upstream Filter(I)	1.00	0.00	1.00	1.00	1.00	1.00	1.00	1.00	1.00	1.00	1.00	1.00
Uniform Delay (d), s/veh	42.6	0.0	40.8	32.3	41.6	48.5	31.7	51.7	51.7	49.7	43.5	43.5
Incr Delay (d2), s/veh	16.6	0.0	2.6	0.5	3.2	220.8	9.7	44.7	44.2	52.5	2.8	2.7
Initial Q Delay(d3),s/veh	0.0	0.0	0.0	0.0	0.0	0.0	0.0	0.0	0.0	0.1	0.0	0.0
%ile BackOfQ(50%),veh/ln	3.6	0.0	15.1	1.7	16.9	57.5	10.2	29.6	30.5	18.2	14.0	14.4
LnGrp Delay(d),s/veh	59.2	0.0	43.4	32.8	44.8	269.3	41.4	96.4	95.9	102.3	46.3	46.3
LnGrp LOS	E		D	C	D	F	D	F	F	F	D	D
Approach Vol, veh/h		547			1344			1474			1100	
Approach Delay, s/veh		47.2			181.5			84.0			63.0	
Approach LOS		D			F			F			E	

Timer	1	2	3	4	5	6	7	8
Assigned Phs	1	2	3	4	5	6	7	8
Phs Duration (G+Y+Rc), s	10.5	58.7	26.7	54.1	10.8	58.4	28.8	52.0
Change Period (Y+Rc), s	5.4	5.4	5.4	5.4	5.4	5.4	5.4	5.4
Max Green Setting (Gmax), s	5.6	52.8	28.2	41.8	5.4	53.0	23.4	46.6
Max Q Clear Time (g_c+I1), s	5.4	31.9	20.6	29.7	7.4	55.0	25.4	48.6
Green Ext Time (p_c), s	0.0	9.4	0.6	8.8	0.0	0.0	0.0	0.0

Intersection Summary	
HCM 2010 Ctrl Delay	103.7
HCM 2010 LOS	F

Movement	EBL	EBT	EBR	WBL	WBT	WBR	NBL	NBT	NBR	SBL	SBT	SBR
Lane Configurations												
Traffic Volume (veh/h)	404	984	53	316	557	658	57	1456	478	315	1106	105
Future Volume (veh/h)	404	984	53	316	557	658	57	1456	478	315	1106	105
Number	5	2	12	1	6	16	3	8	18	7	4	14
Initial Q (Qb), veh	0	0	0	0	0	0	0	0	0	0	0	0
Ped-Bike Adj(A_pbT)	1.00		1.00	1.00		1.00	1.00		1.00	1.00		1.00
Parking Bus, Adj	1.00	1.00	1.00	1.00	1.00	1.00	1.00	1.00	1.00	1.00	1.00	1.00
Adj Sat Flow, veh/h/ln	1863	1863	1900	1863	1863	1863	1863	1863	1863	1863	1863	1900
Adj Flow Rate, veh/h	408	1118	71	385	785	739	84	1754	590	470	1286	119
Adj No. of Lanes	2	2	0	2	2	1	2	2	1	2	3	0
Peak Hour Factor	0.99	0.88	0.75	0.82	0.71	0.89	0.68	0.83	0.81	0.67	0.86	0.88
Percent Heavy Veh, %	2	2	2	2	2	2	2	2	2	2	2	2
Cap, veh/h	404	921	58	314	872	594	124	1318	734	443	2204	204
Arrive On Green	0.12	0.27	0.27	0.09	0.25	0.25	0.04	0.37	0.37	0.13	0.47	0.47
Sat Flow, veh/h	3442	3380	215	3442	3539	1583	3442	3539	1583	3442	4737	438
Grp Volume(v), veh/h	408	585	604	385	785	739	84	1754	590	470	920	485
Grp Sat Flow(s),veh/h/ln	1721	1770	1825	1721	1770	1583	1721	1770	1583	1721	1695	1785
Q Serve(g_s), s	18.8	43.6	43.6	14.6	34.4	32.9	3.9	59.6	36.4	20.6	31.9	31.9
Cycle Q Clear(g_c), s	18.8	43.6	43.6	14.6	34.4	32.9	3.9	59.6	36.4	20.6	31.9	31.9
Prop In Lane	1.00		0.12	1.00		1.00	1.00		1.00	1.00		0.25
Lane Grp Cap(c), veh/h	404	482	497	314	872	594	124	1318	734	443	1577	831
V/C Ratio(X)	1.01	1.21	1.21	1.23	0.90	1.24	0.68	1.33	0.80	1.06	0.58	0.58
Avail Cap(c_a), veh/h	404	482	497	314	872	594	179	1318	734	443	1577	831
HCM Platoon Ratio	1.00	1.00	1.00	1.00	1.00	1.00	1.00	1.00	1.00	1.00	1.00	1.00
Upstream Filter(I)	0.85	0.85	0.85	1.00	1.00	1.00	1.00	1.00	1.00	1.00	1.00	1.00
Uniform Delay (d), s/veh	70.6	58.2	58.2	72.7	58.4	31.5	76.2	50.2	36.7	69.7	31.4	31.4
Incr Delay (d2), s/veh	43.6	111.6	111.6	126.6	14.2	123.8	6.3	154.0	6.5	59.8	0.6	1.0
Initial Q Delay(d3),s/veh	0.0	0.0	0.0	0.0	0.0	0.0	0.0	0.0	0.0	0.0	0.0	0.0
%ile BackOfQ(50%),veh/ln	11.4	36.2	37.4	12.5	18.5	34.7	2.0	57.3	17.1	13.5	15.1	16.0
LnGrp Delay(d),s/veh	114.2	169.8	169.8	199.3	72.6	155.3	82.6	204.2	43.1	129.5	32.0	32.4
LnGrp LOS	F	F	F	F	E	F	F	F	D	F	C	C
Approach Vol, veh/h		1597			1909			2428			1875	
Approach Delay, s/veh		155.6			130.2			160.9			56.5	
Approach LOS		F			F			F			E	

Timer	1	2	3	4	5	6	7	8
Assigned Phs	1	2	3	4	5	6	7	8
Phs Duration (G+Y+Rc), s	20.0	49.0	11.2	79.8	24.2	44.8	26.0	65.0
Change Period (Y+Rc), s	5.4	5.4	5.4	5.4	5.4	5.4	5.4	5.4
Max Green Setting (Gmax), s	14.6	43.6	8.3	71.9	18.8	39.4	20.6	59.6
Max Q Clear Time (g_c+I1), s	16.6	45.6	5.9	33.9	20.8	36.4	22.6	61.6
Green Ext Time (p_c), s	0.0	0.0	0.0	15.2	0.0	2.4	0.0	0.0

Intersection Summary	
HCM 2010 Ctrl Delay	127.2
HCM 2010 LOS	F

Movement	EBL	EBT	EBR	WBL	WBT	WBR	NBL	NBT	NBR	SBL	SBT	SBR
Lane Configurations												
Traffic Volume (veh/h)	50	2090	50	190	1550	190	30	0	20	280	20	20
Future Volume (veh/h)	50	2090	50	190	1550	190	30	0	20	280	20	20
Number	5	2	12	1	6	16	3	8	18	7	4	14
Initial Q (Qb), veh	0	0	0	0	0	0	0	0	0	0	0	0
Ped-Bike Adj(A_pbT)	1.00		1.00	1.00		1.00	1.00		1.00	1.00		1.00
Parking Bus, Adj	1.00	1.00	1.00	1.00	1.00	1.00	1.00	1.00	1.00	1.00	1.00	1.00
Adj Sat Flow, veh/h/ln	1863	1863	1900	1863	1863	1900	1900	1863	1900	1863	1863	1863
Adj Flow Rate, veh/h	54	2272	54	207	1685	207	33	0	22	320	0	22
Adj No. of Lanes	1	3	0	1	3	0	0	1	0	2	0	1
Peak Hour Factor	0.92	0.92	0.92	0.92	0.92	0.92	0.92	0.92	0.92	0.92	0.92	0.92
Percent Heavy Veh, %	2	2	2	2	2	2	2	2	2	2	2	2
Cap, veh/h	219	3437	81	241	3195	391	36	0	24	375	0	167
Arrive On Green	0.06	1.00	1.00	0.05	0.70	0.70	0.04	0.00	0.04	0.11	0.00	0.11
Sat Flow, veh/h	1774	5110	121	1774	4592	562	1015	0	677	3548	0	1583
Grp Volume(v), veh/h	54	1505	821	207	1243	649	55	0	0	320	0	22
Grp Sat Flow(s),veh/h/ln	1774	1695	1841	1774	1695	1764	1692	0	0	1774	0	1583
Q Serve(g_s), s	1.5	0.0	0.0	5.8	28.2	28.4	5.2	0.0	0.0	14.2	0.0	2.0
Cycle Q Clear(g_c), s	1.5	0.0	0.0	5.8	28.2	28.4	5.2	0.0	0.0	14.2	0.0	2.0
Prop In Lane	1.00		0.07	1.00		0.32	0.60		0.40	1.00		1.00
Lane Grp Cap(c), veh/h	219	2280	1239	241	2359	1227	59	0	0	375	0	167
V/C Ratio(X)	0.25	0.66	0.66	0.86	0.53	0.53	0.93	0.00	0.00	0.85	0.00	0.13
Avail Cap(c_a), veh/h	248	2280	1239	411	2359	1227	59	0	0	523	0	234
HCM Platoon Ratio	2.00	2.00	2.00	1.00	1.00	1.00	1.00	1.00	1.00	1.00	1.00	1.00
Upstream Filter(I)	0.80	0.80	0.80	0.89	0.89	0.89	1.00	0.00	0.00	1.00	0.00	1.00
Uniform Delay (d), s/veh	9.5	0.0	0.0	16.0	11.7	11.7	77.0	0.0	0.0	70.3	0.0	64.9
Incr Delay (d2), s/veh	0.5	1.2	2.3	7.9	0.8	1.5	91.3	0.0	0.0	9.5	0.0	0.4
Initial Q Delay(d3),s/veh	0.0	0.0	0.0	0.0	0.0	0.0	0.0	0.0	0.0	0.0	0.0	0.0
%ile BackOfQ(50%),veh/ln	0.7	0.4	0.8	6.6	13.4	14.2	3.9	0.0	0.0	7.5	0.0	0.9
LnGrp Delay(d),s/veh	10.0	1.2	2.3	23.9	12.4	13.2	168.3	0.0	0.0	79.8	0.0	65.2
LnGrp LOS	A	A	A	C	B	B	F			E		E
Approach Vol, veh/h		2380			2099			55			342	
Approach Delay, s/veh		1.8			13.8			168.3			78.9	
Approach LOS		A			B			F			E	

Timer	1	2	3	4	5	6	7	8
Assigned Phs	1	2		4	5	6		8
Phs Duration (G+Y+Rc), s	13.7	113.0		22.3	9.9	116.7		11.0
Change Period (Y+Rc), s	5.4	5.4		5.4	5.4	5.4		5.4
Max Green Setting (Gmax), s	23.6	85.6		23.6	7.2	102.0		5.6
Max Q Clear Time (g_c+I1), s	7.8	2.0		16.2	3.5	30.4		7.2
Green Ext Time (p_c), s	0.5	75.4		0.7	0.0	65.5		0.0

Intersection Summary	
HCM 2010 Ctrl Delay	14.2
HCM 2010 LOS	B

Notes

User approved volume balancing among the lanes for turning movement.

Movement	EBL	EBT	EBR	WBL	WBT	WBR	NBL	NBT	NBR	SBL	SBT	SBR
Lane Configurations												
Traffic Volume (veh/h)	1402	1068	178	90	758	57	252	808	116	138	433	976
Future Volume (veh/h)	1402	1068	178	90	758	57	252	808	116	138	433	976
Number	5	2	12	1	6	16	3	8	18	7	4	14
Initial Q (Qb), veh	0	0	0	0	0	0	0	0	0	0	0	0
Ped-Bike Adj(A_pbT)	1.00		1.00	1.00		1.00	1.00		1.00	1.00		1.00
Parking Bus, Adj	1.00	1.00	1.00	1.00	1.00	1.00	1.00	1.00	1.00	1.00	1.00	1.00
Adj Sat Flow, veh/h/ln	1863	1863	1900	1863	1863	1863	1863	1863	1863	1863	1863	1863
Adj Flow Rate, veh/h	1669	1256	254	112	833	0	315	973	147	150	492	0
Adj No. of Lanes	2	2	0	1	2	1	1	2	1	1	2	1
Peak Hour Factor	0.84	0.85	0.70	0.80	0.91	0.78	0.80	0.83	0.79	0.92	0.88	0.83
Percent Heavy Veh, %	2	2	2	2	2	2	2	2	2	2	2	2
Cap, veh/h	1239	1481	296	151	721	323	297	898	497	129	736	313
Arrive On Green	0.60	0.84	0.84	0.06	0.20	0.00	0.10	0.25	0.25	0.05	0.20	0.00
Sat Flow, veh/h	3442	2940	588	1774	3539	1583	1774	3539	1583	1774	3725	1583
Grp Volume(v), veh/h	1669	751	759	112	833	0	315	973	147	150	492	0
Grp Sat Flow(s),veh/h/ln	1721	1770	1759	1774	1770	1583	1774	1770	1583	1774	1863	1583
Q Serve(g_s), s	57.6	37.0	39.3	8.8	32.6	0.0	16.6	40.6	11.2	7.6	19.5	0.0
Cycle Q Clear(g_c), s	57.6	37.0	39.3	8.8	32.6	0.0	16.6	40.6	11.2	7.6	19.5	0.0
Prop In Lane	1.00		0.33	1.00		1.00	1.00		1.00	1.00		1.00
Lane Grp Cap(c), veh/h	1239	891	886	151	721	323	297	898	497	129	736	313
V/C Ratio(X)	1.35	0.84	0.86	0.74	1.16	0.00	1.06	1.08	0.30	1.16	0.67	0.00
Avail Cap(c_a), veh/h	1239	891	886	151	721	323	297	898	497	129	736	313
HCM Platoon Ratio	1.67	1.67	1.67	1.00	1.00	1.00	1.00	1.00	1.00	1.00	1.00	1.00
Upstream Filter(I)	0.72	0.72	0.72	0.95	0.95	0.00	1.00	1.00	1.00	1.00	1.00	0.00
Uniform Delay (d), s/veh	31.9	9.2	9.4	58.3	63.7	0.0	52.7	59.7	41.5	56.9	59.4	0.0
Incr Delay (d2), s/veh	160.1	7.1	7.8	16.7	84.5	0.0	69.1	55.2	0.3	128.7	2.3	0.0
Initial Q Delay(d3),s/veh	0.0	0.0	0.0	0.0	0.0	0.0	0.0	0.0	0.0	0.0	0.0	0.0
%ile BackOfQ(50%),veh/ln	54.5	18.8	20.2	5.0	24.4	0.0	10.7	26.7	5.0	6.6	10.3	0.0
LnGrp Delay(d),s/veh	192.1	16.3	17.2	74.9	148.2	0.0	121.8	114.9	41.9	185.6	61.7	0.0
LnGrp LOS	F	B	B	E	F		F	F	D	F	E	
Approach Vol, veh/h		3179			945			1435			642	
Approach Delay, s/veh		108.8			139.5			109.0			90.6	
Approach LOS		F			F			F			F	

Timer	1	2	3	4	5	6	7	8
Assigned Phs	1	2	3	4	5	6	7	8
Phs Duration (G+Y+Rc), s	15.0	86.0	22.0	37.0	63.0	38.0	13.0	46.0
Change Period (Y+Rc), s	5.4	5.4	5.4	5.4	5.4	5.4	5.4	5.4
Max Green Setting (Gmax), s	9.6	80.6	16.6	31.6	57.6	32.6	7.6	40.6
Max Q Clear Time (g_c+I1), s	10.8	41.3	18.6	21.5	59.6	34.6	9.6	42.6
Green Ext Time (p_c), s	0.0	28.5	0.0	6.5	0.0	0.0	0.0	0.0

Intersection Summary	
HCM 2010 Ctrl Delay	111.6
HCM 2010 LOS	F

Notes

User approved volume balancing among the lanes for turning movement.

Movement	EBL	EBT	EBR	WBL	WBT	WBR	NBL	NBT	NBR	SBL	SBT	SBR
Lane Configurations												
Traffic Volume (veh/h)	0	1195	176	171	810	0	0	0	0	295	15	5
Future Volume (veh/h)	0	1195	176	171	810	0	0	0	0	295	15	5
Number	5	2	12	1	6	16				7	4	14
Initial Q (Qb), veh	0	0	0	0	0	0				0	0	0
Ped-Bike Adj(A_pbT)	1.00		1.00	1.00		1.00				1.00		1.00
Parking Bus, Adj	1.00	1.00	1.00	1.00	1.00	1.00				1.00	1.00	1.00
Adj Sat Flow, veh/h/ln	0	1863	1863	1863	1863	0				1863	1863	1863
Adj Flow Rate, veh/h	0	1285	0	180	942	0				354	0	0
Adj No. of Lanes	0	2	1	1	2	0				2	0	1
Peak Hour Factor	1.00	0.93	0.85	0.95	0.86	1.00				0.87	0.70	0.25
Percent Heavy Veh, %	0	2	2	2	2	0				2	2	2
Cap, veh/h	0	2630	1177	431	2885	0				416	0	186
Arrive On Green	0.00	1.00	0.00	0.04	0.82	0.00				0.12	0.00	0.00
Sat Flow, veh/h	0	3632	1583	1774	3632	0				3548	0	1583
Grp Volume(v), veh/h	0	1285	0	180	942	0				354	0	0
Grp Sat Flow(s),veh/h/ln	0	1770	1583	1774	1770	0				1774	0	1583
Q Serve(g_s), s	0.0	0.0	0.0	3.7	10.7	0.0				15.7	0.0	0.0
Cycle Q Clear(g_c), s	0.0	0.0	0.0	3.7	10.7	0.0				15.7	0.0	0.0
Prop In Lane	0.00		1.00	1.00		0.00				1.00		1.00
Lane Grp Cap(c), veh/h	0	2630	1177	431	2885	0				416	0	186
V/C Ratio(X)	0.00	0.49	0.00	0.42	0.33	0.00				0.85	0.00	0.00
Avail Cap(c_a), veh/h	0	2630	1177	603	2885	0				745	0	332
HCM Platoon Ratio	1.00	2.00	2.00	1.00	1.00	1.00				1.00	1.00	1.00
Upstream Filter(I)	0.00	0.43	0.00	0.94	0.94	0.00				1.00	0.00	0.00
Uniform Delay (d), s/veh	0.0	0.0	0.0	3.8	3.7	0.0				69.2	0.0	0.0
Incr Delay (d2), s/veh	0.0	0.3	0.0	0.6	0.3	0.0				4.9	0.0	0.0
Initial Q Delay(d3),s/veh	0.0	0.0	0.0	0.0	0.0	0.0				0.0	0.0	0.0
%ile BackOfQ(50%),veh/ln	0.0	0.1	0.0	1.8	5.2	0.0				8.0	0.0	0.0
LnGrp Delay(d),s/veh	0.0	0.3	0.0	4.4	4.0	0.0				74.2	0.0	0.0
LnGrp LOS		A		A	A					E		
Approach Vol, veh/h		1285			1122						354	
Approach Delay, s/veh		0.3			4.1						74.2	
Approach LOS		A			A						E	

Timer	1	2	3	4	5	6	7	8
Assigned Phs	1	2		4		6		
Phs Duration (G+Y+Rc), s	11.5	124.3		24.2		135.8		
Change Period (Y+Rc), s	5.4	5.4		5.4		5.4		
Max Green Setting (Gmax), s	21.6	88.6		33.6		115.6		
Max Q Clear Time (g_c+I1), s	5.7	2.0		17.7		12.7		
Green Ext Time (p_c), s	0.4	32.9		1.1		34.3		

Intersection Summary	
HCM 2010 Ctrl Delay	11.3
HCM 2010 LOS	B

Notes

User approved volume balancing among the lanes for turning movement.

Movement	EBL	EBT	EBR	WBL	WBT	WBR	NBL	NBT	NBR	SBL	SBT	SBR
Lane Configurations												
Traffic Volume (veh/h)	230	1249	0	0	849	564	161	73	178	0	0	0
Future Volume (veh/h)	230	1249	0	0	849	564	161	73	178	0	0	0
Number	5	2	12	1	6	16	3	8	18			
Initial Q (Qb), veh	0	0	0	0	0	0	0	0	0			
Ped-Bike Adj(A_pbT)	1.00		1.00	1.00		1.00	1.00		1.00			
Parking Bus, Adj	1.00	1.00	1.00	1.00	1.00	1.00	1.00	1.00	1.00			
Adj Sat Flow, veh/h/ln	1863	1863	0	0	1863	1863	1900	1863	1863			
Adj Flow Rate, veh/h	307	1419	0	0	894	0	233	79	0			
Adj No. of Lanes	1	2	0	0	2	1	0	2	1			
Peak Hour Factor	0.75	0.88	1.00	1.00	0.95	0.85	0.69	0.92	0.81			
Percent Heavy Veh, %	2	2	0	0	2	2	2	2	2			
Cap, veh/h	529	2773	0	0	2386	1068	264	264	236			
Arrive On Green	0.15	1.00	0.00	0.00	0.67	0.00	0.15	0.15	0.00			
Sat Flow, veh/h	1774	3632	0	0	3632	1583	1774	1770	1583			
Grp Volume(v), veh/h	307	1419	0	0	894	0	233	79	0			
Grp Sat Flow(s),veh/h/ln	1774	1770	0	0	1770	1583	1774	1770	1583			
Q Serve(g_s), s	9.2	0.0	0.0	0.0	17.6	0.0	20.6	6.4	0.0			
Cycle Q Clear(g_c), s	9.2	0.0	0.0	0.0	17.6	0.0	20.6	6.4	0.0			
Prop In Lane	1.00		0.00	0.00		1.00	1.00		1.00			
Lane Grp Cap(c), veh/h	529	2773	0	0	2386	1068	264	264	236			
V/C Ratio(X)	0.58	0.51	0.00	0.00	0.37	0.00	0.88	0.30	0.00			
Avail Cap(c_a), veh/h	734	2773	0	0	2386	1068	361	361	323			
HCM Platoon Ratio	2.00	2.00	1.00	1.00	1.00	1.00	1.00	1.00	1.00			
Upstream Filter(I)	0.81	0.81	0.00	0.00	1.00	0.00	1.00	1.00	0.00			
Uniform Delay (d), s/veh	7.2	0.0	0.0	0.0	11.4	0.0	66.7	60.6	0.0			
Incr Delay (d2), s/veh	0.8	0.6	0.0	0.0	0.5	0.0	17.0	0.6	0.0			
Initial Q Delay(d3),s/veh	0.0	0.0	0.0	0.0	0.0	0.0	0.0	0.0	0.0			
%ile BackOfQ(50%),veh/ln	4.5	0.2	0.0	0.0	8.7	0.0	11.3	3.2	0.0			
LnGrp Delay(d),s/veh	8.0	0.6	0.0	0.0	11.8	0.0	83.7	61.3	0.0			
LnGrp LOS	A	A			B		F	E				
Approach Vol, veh/h		1726			894			312				
Approach Delay, s/veh		1.9			11.8			78.0				
Approach LOS		A			B			E				

Timer	1	2	3	4	5	6	7	8
Assigned Phs		2			5	6		8
Phs Duration (G+Y+Rc), s		130.8			17.5	113.3		29.2
Change Period (Y+Rc), s		5.4			5.4	5.4		5.4
Max Green Setting (Gmax), s		116.6			30.6	80.6		32.6
Max Q Clear Time (g_c+I1), s		2.0			11.2	19.6		22.6
Green Ext Time (p_c), s		37.9			0.8	30.9		1.3

Intersection Summary	
HCM 2010 Ctrl Delay	13.0
HCM 2010 LOS	B

Notes

User approved ignoring U-Turning movement.

Movement	EBL	EBT	EBR	WBL	WBT	WBR	NBL	NBT	NBR	SBL	SBT	SBR
Lane Configurations												
Traffic Volume (veh/h)	129	1071	150	98	831	68	335	358	140	101	223	133
Future Volume (veh/h)	129	1071	150	98	831	68	335	358	140	101	223	133
Number	5	2	12	1	6	16	3	8	18	7	4	14
Initial Q (Qb), veh	0	0	0	0	0	0	0	0	0	0	0	0
Ped-Bike Adj(A_pbT)	1.00		1.00	1.00		1.00	1.00		1.00	1.00		1.00
Parking Bus, Adj	1.00	1.00	1.00	1.00	1.00	1.00	1.00	1.00	1.00	1.00	1.00	1.00
Adj Sat Flow, veh/h/ln	1863	1863	1900	1863	1863	1900	1863	1863	1863	1863	1863	1863
Adj Flow Rate, veh/h	195	1190	195	134	944	69	394	421	173	142	232	190
Adj No. of Lanes	1	2	0	1	2	0	1	1	1	1	1	1
Peak Hour Factor	0.66	0.90	0.77	0.73	0.88	0.98	0.85	0.85	0.81	0.71	0.96	0.70
Percent Heavy Veh, %	2	2	2	2	2	2	2	2	2	2	2	2
Cap, veh/h	305	1433	234	190	1507	110	416	521	527	211	269	344
Arrive On Green	0.07	0.47	0.47	0.05	0.45	0.45	0.20	0.28	0.28	0.06	0.14	0.14
Sat Flow, veh/h	1774	3048	497	1774	3345	244	1774	1863	1583	1774	1863	1583
Grp Volume(v), veh/h	195	689	696	134	499	514	394	421	173	142	232	190
Grp Sat Flow(s),veh/h/ln	1774	1770	1775	1774	1770	1820	1774	1863	1583	1774	1863	1583
Q Serve(g_s), s	9.4	54.0	54.8	6.5	34.6	34.6	29.5	33.7	13.1	9.9	19.5	17.1
Cycle Q Clear(g_c), s	9.4	54.0	54.8	6.5	34.6	34.6	29.5	33.7	13.1	9.9	19.5	17.1
Prop In Lane	1.00		0.28	1.00		0.13	1.00		1.00	1.00		1.00
Lane Grp Cap(c), veh/h	305	832	834	190	797	820	416	521	527	211	269	344
V/C Ratio(X)	0.64	0.83	0.83	0.71	0.63	0.63	0.95	0.81	0.33	0.67	0.86	0.55
Avail Cap(c_a), veh/h	381	832	834	234	797	820	417	539	543	211	286	359
HCM Platoon Ratio	1.00	1.00	1.00	1.00	1.00	1.00	1.00	1.00	1.00	1.00	1.00	1.00
Upstream Filter(I)	1.00	1.00	1.00	0.92	0.92	0.92	1.00	1.00	1.00	1.00	1.00	1.00
Uniform Delay (d), s/veh	26.2	36.8	37.0	33.7	33.7	33.7	44.8	53.7	39.9	56.6	66.9	55.7
Incr Delay (d2), s/veh	2.4	9.3	9.6	6.5	3.4	3.3	30.7	8.7	0.4	8.0	21.8	1.7
Initial Q Delay(d3),s/veh	0.0	0.0	0.0	0.0	0.0	0.0	0.0	0.0	0.0	0.0	0.0	0.0
%ile BackOfQ(50%),veh/ln	4.8	28.5	28.9	3.5	17.7	18.2	17.9	18.6	5.8	1.7	11.7	7.6
LnGrp Delay(d),s/veh	28.6	46.1	46.6	40.3	37.1	37.0	75.5	62.4	40.3	64.6	88.7	57.3
LnGrp LOS	C	D	D	D	D	D	E	E	D	E	F	E
Approach Vol, veh/h		1580			1147			988			564	
Approach Delay, s/veh		44.2			37.4			63.7			72.1	
Approach LOS		D			D			E			E	

Timer	1	2	3	4	5	6	7	8
Assigned Phs	1	2	3	4	5	6	7	8
Phs Duration (G+Y+Rc), s	14.0	80.6	36.9	28.5	17.1	77.5	15.3	50.1
Change Period (Y+Rc), s	5.4	5.4	5.4	5.4	5.4	5.4	5.4	5.4
Max Green Setting (Gmax), s	12.6	69.6	31.6	24.6	18.6	63.6	9.9	46.3
Max Q Clear Time (g_c+I1), s	8.5	56.8	31.5	21.5	11.4	36.6	11.9	35.7
Green Ext Time (p_c), s	0.1	10.3	0.0	1.6	0.3	18.2	0.0	4.0

Intersection Summary	
HCM 2010 Ctrl Delay	50.5
HCM 2010 LOS	D

Movement	EBL	EBT	WBT	WBR	SBL	SBR
Lane Configurations						
Traffic Volume (veh/h)	27	1326	933	75	127	59
Future Volume (veh/h)	27	1326	933	75	127	59
Number	5	2	6	16	7	14
Initial Q (Qb), veh	0	0	0	0	0	0
Ped-Bike Adj(A_pbT)	1.00			1.00	1.00	1.00
Parking Bus, Adj	1.00	1.00	1.00	1.00	1.00	1.00
Adj Sat Flow, veh/h/ln	1863	1863	1863	1900	1863	1863
Adj Flow Rate, veh/h	35	1579	1037	134	163	79
Adj No. of Lanes	1	2	2	0	1	1
Peak Hour Factor	0.78	0.84	0.90	0.56	0.78	0.75
Percent Heavy Veh, %	2	2	2	2	2	2
Cap, veh/h	398	2922	2604	336	190	169
Arrive On Green	1.00	1.00	0.83	0.83	0.11	0.11
Sat Flow, veh/h	477	3632	3247	407	1774	1583
Grp Volume(v), veh/h	35	1579	582	589	163	79
Grp Sat Flow(s),veh/h/ln	477	1770	1770	1791	1774	1583
Q Serve(g_s), s	1.3	0.0	13.7	13.7	14.5	7.5
Cycle Q Clear(g_c), s	15.0	0.0	13.7	13.7	14.5	7.5
Prop In Lane	1.00			0.23	1.00	1.00
Lane Grp Cap(c), veh/h	398	2922	1461	1479	190	169
V/C Ratio(X)	0.09	0.54	0.40	0.40	0.86	0.47
Avail Cap(c_a), veh/h	398	2922	1461	1479	373	332
HCM Platoon Ratio	2.00	2.00	1.00	1.00	1.00	1.00
Upstream Filter(I)	0.50	0.50	0.93	0.93	1.00	1.00
Uniform Delay (d), s/veh	0.8	0.0	3.6	3.6	70.3	67.2
Incr Delay (d2), s/veh	0.2	0.4	0.2	0.2	10.8	2.0
Initial Q Delay(d3),s/veh	0.0	0.0	0.0	0.0	0.0	0.0
%ile BackOfQ(50%),veh/ln	0.2	0.1	6.7	6.8	7.7	3.4
LnGrp Delay(d),s/veh	1.0	0.4	3.8	3.8	81.0	69.2
LnGrp LOS	A	A	A	A	F	E
Approach Vol, veh/h		1614	1171		242	
Approach Delay, s/veh		0.4	3.8		77.2	
Approach LOS		A	A		E	

Timer	1	2	3	4	5	6	7	8
Assigned Phs		2		4		6		
Phs Duration (G+Y+Rc), s		137.5		22.5		137.5		
Change Period (Y+Rc), s		5.4		5.4		5.4		
Max Green Setting (Gmax), s		115.6		33.6		115.6		
Max Q Clear Time (g_c+I1), s		17.0		16.5		15.7		
Green Ext Time (p_c), s		50.7		0.6		51.0		

Intersection Summary	
HCM 2010 Ctrl Delay	7.8
HCM 2010 LOS	A

Movement	EBL	EBT	EBR	WBL	WBT	WBR	NBL	NBT	NBR	SBL	SBT	SBR
Lane Configurations												
Traffic Volume (veh/h)	539	1063	43	8	647	71	8	4	6	54	3	73
Future Volume (veh/h)	539	1063	43	8	647	71	8	4	6	54	3	73
Number	5	2	12	1	6	16	3	8	18	7	4	14
Initial Q (Qb), veh	0	0	0	0	0	0	0	0	0	0	0	0
Ped-Bike Adj(A_pbT)	1.00		1.00	1.00		1.00	1.00		1.00	1.00		1.00
Parking Bus, Adj	1.00	1.00	1.00	1.00	1.00	1.00	1.00	1.00	1.00	1.00	1.00	1.00
Adj Sat Flow, veh/h/ln	1863	1863	1900	1863	1863	1900	1900	1863	1863	1900	1863	1863
Adj Flow Rate, veh/h	592	1107	67	12	703	97	12	12	8	75	8	91
Adj No. of Lanes	1	2	0	1	2	0	0	1	1	0	1	1
Peak Hour Factor	0.91	0.96	0.64	0.67	0.92	0.73	0.67	0.33	0.75	0.72	0.38	0.80
Percent Heavy Veh, %	2	2	2	2	2	2	2	2	2	2	2	2
Cap, veh/h	665	2914	176	388	2249	310	86	75	116	114	10	116
Arrive On Green	0.11	0.86	0.86	0.72	0.72	0.72	0.07	0.07	0.07	0.07	0.07	0.07
Sat Flow, veh/h	1774	3391	205	476	3125	431	716	1029	1583	976	138	1583
Grp Volume(v), veh/h	592	577	597	12	398	402	24	0	8	83	0	91
Grp Sat Flow(s),veh/h/ln	1774	1770	1827	476	1770	1787	1745	0	1583	1114	0	1583
Q Serve(g_s), s	13.0	10.9	10.9	1.2	13.0	13.0	0.0	0.0	0.8	8.4	0.0	9.0
Cycle Q Clear(g_c), s	13.0	10.9	10.9	1.2	13.0	13.0	1.9	0.0	0.8	8.4	0.0	9.0
Prop In Lane	1.00		0.11	1.00		0.24	0.50		1.00	0.90		1.00
Lane Grp Cap(c), veh/h	665	1521	1570	388	1274	1286	161	0	116	0	0	116
V/C Ratio(X)	0.89	0.38	0.38	0.03	0.31	0.31	0.15	0.00	0.07	0.00	0.00	0.79
Avail Cap(c_a), veh/h	1227	1521	1570	388	1274	1286	176	0	131	0	0	234
HCM Platoon Ratio	1.00	1.00	1.00	1.00	1.00	1.00	1.00	1.00	1.00	1.00	1.00	1.00
Upstream Filter(I)	0.78	0.78	0.78	1.00	1.00	1.00	1.00	0.00	1.00	1.00	0.00	1.00
Uniform Delay (d), s/veh	8.8	2.3	2.3	6.4	8.1	8.1	69.6	0.0	69.1	0.0	0.0	72.9
Incr Delay (d2), s/veh	3.5	0.6	0.6	0.1	0.6	0.6	0.4	0.0	0.2	0.0	0.0	11.1
Initial Q Delay(d3),s/veh	0.0	0.0	0.0	0.0	0.0	0.0	0.0	0.0	0.0	0.0	0.0	0.0
%ile BackOfQ(50%),veh/ln	19.2	5.4	5.5	0.2	6.5	6.6	1.0	0.0	0.3	0.0	0.0	4.3
LnGrp Delay(d),s/veh	12.2	2.9	2.9	6.6	8.7	8.7	70.0	0.0	69.3	0.0	0.0	84.0
LnGrp LOS	B	A	A	A	A	A	E		E			F
Approach Vol, veh/h		1766			812			32			174	
Approach Delay, s/veh		6.0			8.7			69.9			43.9	
Approach LOS		A			A			E			D	

Timer	1	2	3	4	5	6	7	8
Assigned Phs		2		4	5	6		8
Phs Duration (G+Y+Rc), s		142.9		17.1	22.3	120.6		17.1
Change Period (Y+Rc), s		5.4		5.4	5.4	5.4		5.4
Max Green Setting (Gmax), s		125.6		23.6	67.6	52.6		13.2
Max Q Clear Time (g_c+I1), s		12.9		11.0	15.0	15.0		3.9
Green Ext Time (p_c), s		21.4		0.7	2.0	17.0		0.5

Intersection Summary	
HCM 2010 Ctrl Delay	9.9
HCM 2010 LOS	A

Movement	EBL	EBT	EBR	WBL	WBT	WBR	NBL	NBT	NBR	SBL	SBT	SBR
Lane Configurations												
Traffic Volume (veh/h)	621	304	169	164	238	31	382	2464	107	85	1208	243
Future Volume (veh/h)	621	304	169	164	238	31	382	2464	107	85	1208	243
Number	5	2	12	1	6	16	3	8	18	7	4	14
Initial Q (Qb), veh	0	0	0	0	0	0	0	0	0	0	0	0
Ped-Bike Adj(A_pbT)	1.00		1.00	1.00		1.00	1.00		1.00	1.00		1.00
Parking Bus, Adj	1.00	1.00	1.00	1.00	1.00	1.00	1.00	1.00	1.00	1.00	1.00	1.00
Adj Sat Flow, veh/h/ln	1863	1863	1863	1863	1863	1900	1863	1863	1900	1863	1863	1863
Adj Flow Rate, veh/h	714	330	0	182	319	55	434	2678	141	96	1313	289
Adj No. of Lanes	2	1	1	1	2	0	2	3	0	1	3	1
Peak Hour Factor	0.87	0.92	0.71	0.79	0.84	0.56	0.88	0.92	0.76	0.89	0.92	0.84
Percent Heavy Veh, %	2	2	2	2	2	2	2	2	2	2	2	2
Cap, veh/h	772	405	344	193	337	58	489	2475	128	114	2017	628
Arrive On Green	0.22	0.22	0.00	0.11	0.11	0.11	0.14	0.50	0.50	0.04	0.40	0.40
Sat Flow, veh/h	3548	1863	1583	1774	3103	529	3442	4951	257	1774	5085	1583
Grp Volume(v), veh/h	714	330	0	182	190	184	434	1821	998	96	1313	289
Grp Sat Flow(s),veh/h/ln	1774	1863	1583	1774	1863	1769	1721	1695	1817	1774	1695	1583
Q Serve(g_s), s	31.5	27.0	0.0	16.3	16.2	16.5	19.8	80.0	80.0	5.2	33.6	21.6
Cycle Q Clear(g_c), s	31.5	27.0	0.0	16.3	16.2	16.5	19.8	80.0	80.0	5.2	33.6	21.6
Prop In Lane	1.00		1.00	1.00		0.30	1.00		0.14	1.00		1.00
Lane Grp Cap(c), veh/h	772	405	344	193	203	192	489	1695	909	114	2017	628
V/C Ratio(X)	0.93	0.81	0.00	0.94	0.94	0.96	0.89	1.07	1.10	0.84	0.65	0.46
Avail Cap(c_a), veh/h	772	405	344	193	203	192	611	1695	909	114	2017	628
HCM Platoon Ratio	1.00	1.00	1.00	1.00	1.00	1.00	1.00	1.00	1.00	1.00	1.00	1.00
Upstream Filter(I)	1.00	1.00	0.00	1.00	1.00	1.00	1.00	1.00	1.00	1.00	1.00	1.00
Uniform Delay (d), s/veh	61.3	59.5	0.0	70.8	70.8	70.9	67.4	40.0	40.0	39.5	39.3	35.6
Incr Delay (d2), s/veh	18.6	16.3	0.0	51.5	48.9	54.3	12.7	45.0	60.2	40.9	0.7	0.5
Initial Q Delay(d3),s/veh	0.0	0.0	0.0	0.0	0.0	0.0	0.0	0.0	0.0	0.0	0.0	0.0
%ile BackOfQ(50%),veh/ln	17.5	15.7	0.0	10.7	11.1	11.0	10.3	47.8	55.3	3.8	15.8	9.5
LnGrp Delay(d),s/veh	79.9	75.9	0.0	122.3	119.6	125.3	80.1	85.0	100.2	80.4	40.0	36.1
LnGrp LOS	E	E		F	F	F	F	F	F	F	D	D
Approach Vol, veh/h		1044			556			3253			1698	
Approach Delay, s/veh		78.6			122.4			89.0			41.6	
Approach LOS		E			F			F			D	

Timer	1	2	3	4	5	6	7	8
Assigned Phs		2	3	4		6	7	8
Phs Duration (G+Y+Rc), s		40.2	28.1	68.9		22.8	11.6	85.4
Change Period (Y+Rc), s		5.4	5.4	5.4		5.4	5.4	5.4
Max Green Setting (Gmax), s		34.8	28.4	57.8		17.4	6.2	80.0
Max Q Clear Time (g_c+I1), s		33.5	21.8	35.6		18.5	7.2	82.0
Green Ext Time (p_c), s		0.7	0.9	21.9		0.0	0.0	0.0

Intersection Summary	
HCM 2010 Ctrl Delay	77.9
HCM 2010 LOS	E

Notes

User approved volume balancing among the lanes for turning movement.

Movement	EBL	EBT	EBR	WBL	WBT	WBR	NBL	NBT	NBR	SBL	SBT	SBR
Lane Configurations												
Traffic Volume (veh/h)	132	468	28	10	363	59	38	104	11	38	44	32
Future Volume (veh/h)	132	468	28	10	363	59	38	104	11	38	44	32
Number	5	2	12	1	6	16	3	8	18	7	4	14
Initial Q (Qb), veh	0	0	0	0	0	0	0	0	0	0	0	0
Ped-Bike Adj(A_pbT)	1.00		1.00	1.00		1.00	1.00		1.00	1.00		1.00
Parking Bus, Adj	1.00	1.00	1.00	1.00	1.00	1.00	1.00	1.00	1.00	1.00	1.00	1.00
Adj Sat Flow, veh/h/ln	1863	1863	1900	1863	1863	1900	1863	1863	1900	1863	1863	1900
Adj Flow Rate, veh/h	171	585	33	12	412	80	56	137	20	44	60	48
Adj No. of Lanes	1	1	0	1	1	0	1	1	0	1	1	0
Peak Hour Factor	0.77	0.80	0.84	0.83	0.88	0.74	0.68	0.76	0.55	0.86	0.73	0.67
Percent Heavy Veh, %	2	2	2	2	2	2	2	2	2	2	2	2
Cap, veh/h	414	801	45	294	588	114	288	204	30	251	116	93
Arrive On Green	0.09	0.46	0.46	0.02	0.39	0.39	0.05	0.13	0.13	0.04	0.12	0.12
Sat Flow, veh/h	1774	1747	99	1774	1516	294	1774	1590	232	1774	960	768
Grp Volume(v), veh/h	171	0	618	12	0	492	56	0	157	44	0	108
Grp Sat Flow(s),veh/h/ln	1774	0	1845	1774	0	1811	1774	0	1822	1774	0	1727
Q Serve(g_s), s	3.3	0.0	16.6	0.2	0.0	13.9	1.6	0.0	5.0	1.3	0.0	3.6
Cycle Q Clear(g_c), s	3.3	0.0	16.6	0.2	0.0	13.9	1.6	0.0	5.0	1.3	0.0	3.6
Prop In Lane	1.00		0.05	1.00		0.16	1.00		0.13	1.00		0.44
Lane Grp Cap(c), veh/h	414	0	846	294	0	703	288	0	234	251	0	209
V/C Ratio(X)	0.41	0.00	0.73	0.04	0.00	0.70	0.19	0.00	0.67	0.17	0.00	0.52
Avail Cap(c_a), veh/h	560	0	1316	419	0	1143	362	0	437	327	0	403
HCM Platoon Ratio	1.00	1.00	1.00	1.00	1.00	1.00	1.00	1.00	1.00	1.00	1.00	1.00
Upstream Filter(I)	1.00	0.00	1.00	1.00	0.00	1.00	1.00	0.00	1.00	1.00	0.00	1.00
Uniform Delay (d), s/veh	11.0	0.0	13.4	12.2	0.0	15.6	21.7	0.0	25.3	22.0	0.0	25.1
Incr Delay (d2), s/veh	0.7	0.0	1.2	0.1	0.0	1.3	0.3	0.0	3.3	0.3	0.0	2.0
Initial Q Delay(d3),s/veh	0.0	0.0	0.0	0.0	0.0	0.0	0.0	0.0	0.0	0.0	0.0	0.0
%ile BackOfQ(50%),veh/ln	1.6	0.0	8.7	0.1	0.0	7.1	0.8	0.0	2.7	0.6	0.0	1.8
LnGrp Delay(d),s/veh	11.7	0.0	14.7	12.2	0.0	16.9	22.0	0.0	28.6	22.3	0.0	27.0
LnGrp LOS	B		B	B		B	C		C	C		C
Approach Vol, veh/h		789			504			213			152	
Approach Delay, s/veh		14.0			16.8			26.9			25.6	
Approach LOS		B			B			C			C	

Timer	1	2	3	4	5	6	7	8
Assigned Phs	1	2	3	4	5	6	7	8
Phs Duration (G+Y+Rc), s	6.3	33.3	8.5	12.8	10.6	29.0	8.0	13.2
Change Period (Y+Rc), s	5.4	5.4	5.4	5.4	5.4	5.4	5.4	5.4
Max Green Setting (Gmax), s	5.2	43.4	5.6	14.2	10.2	38.4	5.2	14.6
Max Q Clear Time (g_c+I1), s	2.2	18.6	3.6	5.6	5.3	15.9	3.3	7.0
Green Ext Time (p_c), s	0.0	8.0	0.0	0.9	0.2	7.7	0.0	0.8

Intersection Summary	
HCM 2010 Ctrl Delay	17.6
HCM 2010 LOS	B

Movement	EBL	EBT	EBR	WBL	WBT	WBR	NBL	NBT	NBR	SBL	SBT	SBR
Lane Configurations												
Traffic Volume (veh/h)	126	362	57	54	206	19	85	443	72	35	231	46
Future Volume (veh/h)	126	362	57	54	206	19	85	443	72	35	231	46
Number	5	2	12	1	6	16	3	8	18	7	4	14
Initial Q (Qb), veh	0	0	0	0	0	0	0	0	0	0	0	0
Ped-Bike Adj(A_pbT)	1.00		1.00	1.00		1.00	1.00		1.00	1.00		1.00
Parking Bus, Adj	1.00	1.00	1.00	1.00	1.00	1.00	1.00	1.00	1.00	1.00	1.00	1.00
Adj Sat Flow, veh/h/ln	1863	1863	1900	1863	1863	1900	1863	1863	1900	1863	1863	1900
Adj Flow Rate, veh/h	183	398	90	72	219	42	157	482	114	44	260	78
Adj No. of Lanes	1	1	0	1	1	0	1	1	0	1	1	0
Peak Hour Factor	0.69	0.91	0.63	0.75	0.94	0.45	0.54	0.92	0.63	0.80	0.89	0.59
Percent Heavy Veh, %	2	2	2	2	2	2	2	2	2	2	2	2
Cap, veh/h	399	444	100	210	385	74	387	517	122	183	430	129
Arrive On Green	0.10	0.30	0.30	0.05	0.25	0.25	0.08	0.36	0.36	0.04	0.31	0.31
Sat Flow, veh/h	1774	1471	333	1774	1520	291	1774	1457	345	1774	1377	413
Grp Volume(v), veh/h	183	0	488	72	0	261	157	0	596	44	0	338
Grp Sat Flow(s),veh/h/ln	1774	0	1804	1774	0	1811	1774	0	1802	1774	0	1790
Q Serve(g_s), s	6.2	0.0	21.8	2.5	0.0	10.6	4.9	0.0	26.8	1.4	0.0	13.5
Cycle Q Clear(g_c), s	6.2	0.0	21.8	2.5	0.0	10.6	4.9	0.0	26.8	1.4	0.0	13.5
Prop In Lane	1.00		0.18	1.00		0.16	1.00		0.19	1.00		0.23
Lane Grp Cap(c), veh/h	399	0	544	210	0	459	387	0	640	183	0	559
V/C Ratio(X)	0.46	0.00	0.90	0.34	0.00	0.57	0.41	0.00	0.93	0.24	0.00	0.60
Avail Cap(c_a), veh/h	409	0	590	234	0	519	421	0	655	223	0	581
HCM Platoon Ratio	1.00	1.00	1.00	1.00	1.00	1.00	1.00	1.00	1.00	1.00	1.00	1.00
Upstream Filter(I)	1.00	0.00	1.00	1.00	0.00	1.00	1.00	0.00	1.00	1.00	0.00	1.00
Uniform Delay (d), s/veh	20.2	0.0	28.1	23.4	0.0	27.4	18.2	0.0	26.1	21.6	0.0	24.5
Incr Delay (d2), s/veh	0.8	0.0	15.7	1.0	0.0	1.1	0.7	0.0	20.0	0.7	0.0	1.7
Initial Q Delay(d3),s/veh	0.0	0.0	0.0	0.0	0.0	0.0	0.0	0.0	0.0	0.0	0.0	0.0
%ile BackOfQ(50%),veh/ln	3.1	0.0	13.2	1.3	0.0	5.4	2.5	0.0	16.8	0.7	0.0	6.9
LnGrp Delay(d),s/veh	21.1	0.0	43.8	24.4	0.0	28.5	18.9	0.0	46.1	22.3	0.0	26.2
LnGrp LOS	C		D	C		C	B		D	C		C
Approach Vol, veh/h		671			333			753			382	
Approach Delay, s/veh		37.6			27.6			40.4			25.8	
Approach LOS		D			C			D			C	

Timer	1	2	3	4	5	6	7	8
Assigned Phs	1	2	3	4	5	6	7	8
Phs Duration (G+Y+Rc), s	9.5	30.8	12.2	31.7	13.5	26.7	8.6	35.3
Change Period (Y+Rc), s	5.4	5.4	5.4	5.4	5.4	5.4	5.4	5.4
Max Green Setting (Gmax), s	5.2	27.5	8.4	27.3	8.6	24.1	5.1	30.6
Max Q Clear Time (g_c+I1), s	4.5	23.8	6.9	15.5	8.2	12.6	3.4	28.8
Green Ext Time (p_c), s	0.0	1.6	0.1	4.9	0.0	3.6	0.0	1.0

Intersection Summary	
HCM 2010 Ctrl Delay	34.9
HCM 2010 LOS	C

Movement	EBL	EBT	EBR	WBL	WBT	WBR	NBL	NBT	NBR	SBL	SBT	SBR
Lane Configurations												
Traffic Volume (veh/h)	391	185	13	1	134	156	29	59	8	79	28	62
Future Volume (veh/h)	391	185	13	1	134	156	29	59	8	79	28	62
Number	5	2	12	1	6	16	3	8	18	7	4	14
Initial Q (Qb), veh	0	0	0	0	0	0	0	0	0	0	0	0
Ped-Bike Adj(A_pbT)	1.00		1.00	1.00		1.00	1.00		1.00	1.00		1.00
Parking Bus, Adj	1.00	1.00	1.00	1.00	1.00	1.00	1.00	1.00	1.00	1.00	1.00	1.00
Adj Sat Flow, veh/h/ln	1863	1863	1900	1863	1863	1900	1863	1863	1900	1863	1863	1863
Adj Flow Rate, veh/h	483	240	28	4	144	205	44	72	16	90	44	95
Adj No. of Lanes	1	1	0	1	1	0	1	1	0	1	1	1
Peak Hour Factor	0.81	0.77	0.46	0.25	0.93	0.76	0.66	0.82	0.50	0.88	0.64	0.65
Percent Heavy Veh, %	2	2	2	2	2	2	2	2	2	2	2	2
Cap, veh/h	704	1066	124	782	453	646	298	232	51	276	292	248
Arrive On Green	0.65	0.65	0.65	0.65	0.65	0.65	0.16	0.16	0.16	0.16	0.16	0.16
Sat Flow, veh/h	1028	1638	191	1107	696	991	1245	1477	328	1304	1863	1583
Grp Volume(v), veh/h	483	0	268	4	0	349	44	0	88	90	44	95
Grp Sat Flow(s),veh/h/ln	1028	0	1829	1107	0	1688	1245	0	1805	1304	1863	1583
Q Serve(g_s), s	21.9	0.0	3.4	0.1	0.0	5.1	1.8	0.0	2.4	3.7	1.1	3.0
Cycle Q Clear(g_c), s	27.0	0.0	3.4	3.4	0.0	5.1	2.9	0.0	2.4	6.1	1.1	3.0
Prop In Lane	1.00		0.10	1.00		0.59	1.00		0.18	1.00		1.00
Lane Grp Cap(c), veh/h	704	0	1191	782	0	1099	298	0	283	276	292	248
V/C Ratio(X)	0.69	0.00	0.23	0.01	0.00	0.32	0.15	0.00	0.31	0.33	0.15	0.38
Avail Cap(c_a), veh/h	1234	0	2134	1353	0	1969	404	0	437	387	451	383
HCM Platoon Ratio	1.00	1.00	1.00	1.00	1.00	1.00	1.00	1.00	1.00	1.00	1.00	1.00
Upstream Filter(I)	1.00	0.00	1.00	1.00	0.00	1.00	1.00	0.00	1.00	1.00	1.00	1.00
Uniform Delay (d), s/veh	10.3	0.0	4.0	4.7	0.0	4.3	21.7	0.0	21.0	23.7	20.5	21.3
Incr Delay (d2), s/veh	1.2	0.0	0.1	0.0	0.0	0.2	0.2	0.0	0.6	0.7	0.2	1.0
Initial Q Delay(d3),s/veh	0.0	0.0	0.0	0.0	0.0	0.0	0.0	0.0	0.0	0.0	0.0	0.0
%ile BackOfQ(50%),veh/ln	6.3	0.0	1.7	0.0	0.0	2.4	0.6	0.0	1.2	1.4	0.6	1.4
LnGrp Delay(d),s/veh	11.5	0.0	4.1	4.7	0.0	4.5	22.0	0.0	21.6	24.4	20.7	22.2
LnGrp LOS	B		A	A		A	C		C	C	C	C
Approach Vol, veh/h		751			353			132			229	
Approach Delay, s/veh		8.8			4.5			21.7			22.8	
Approach LOS		A			A			C			C	

Timer	1	2	3	4	5	6	7	8
Assigned Phs		2		4		6		8
Phs Duration (G+Y+Rc), s		42.0		14.2		42.0		14.2
Change Period (Y+Rc), s		5.4		5.4		5.4		5.4
Max Green Setting (Gmax), s		65.6		13.6		65.6		13.6
Max Q Clear Time (g_c+I1), s		29.0		8.1		7.1		4.9
Green Ext Time (p_c), s		7.6		0.7		7.9		1.0

Intersection Summary	
HCM 2010 Ctrl Delay	11.1
HCM 2010 LOS	B

Movement	EBL	EBT	EBR	WBL	WBT	WBR	NBL	NBT	NBR	SBL	SBT	SBR
Lane Configurations												
Traffic Volume (veh/h)	86	71	117	57	55	11	129	833	80	16	311	40
Future Volume (veh/h)	86	71	117	57	55	11	129	833	80	16	311	40
Number	5	2	12	1	6	16	3	8	18	7	4	14
Initial Q (Qb), veh	0	0	0	0	0	0	0	0	0	0	0	0
Ped-Bike Adj(A_pbT)	1.00		1.00	1.00		1.00	1.00		1.00	1.00		1.00
Parking Bus, Adj	1.00	1.00	1.00	1.00	1.00	1.00	1.00	1.00	1.00	1.00	1.00	1.00
Adj Sat Flow, veh/h/ln	1863	1863	1900	1863	1863	1900	1863	1863	1900	1863	1863	1900
Adj Flow Rate, veh/h	126	113	167	102	100	20	150	905	123	30	349	60
Adj No. of Lanes	1	1	0	1	1	0	1	1	0	1	1	0
Peak Hour Factor	0.68	0.63	0.70	0.56	0.55	0.55	0.86	0.92	0.65	0.54	0.89	0.67
Percent Heavy Veh, %	2	2	2	2	2	2	2	2	2	2	2	2
Cap, veh/h	284	110	162	155	243	49	552	901	123	115	825	142
Arrive On Green	0.05	0.16	0.16	0.05	0.16	0.16	0.06	0.56	0.56	0.03	0.53	0.53
Sat Flow, veh/h	1774	680	1005	1774	1508	302	1774	1606	218	1774	1549	266
Grp Volume(v), veh/h	126	0	280	102	0	120	150	0	1028	30	0	409
Grp Sat Flow(s),veh/h/ln	1774	0	1685	1774	0	1810	1774	0	1824	1774	0	1816
Q Serve(g_s), s	5.4	0.0	17.4	5.2	0.0	6.4	4.1	0.0	60.6	0.8	0.0	14.7
Cycle Q Clear(g_c), s	5.4	0.0	17.4	5.2	0.0	6.4	4.1	0.0	60.6	0.8	0.0	14.7
Prop In Lane	1.00		0.60	1.00		0.17	1.00		0.12	1.00		0.15
Lane Grp Cap(c), veh/h	284	0	272	155	0	292	552	0	1024	115	0	967
V/C Ratio(X)	0.44	0.00	1.03	0.66	0.00	0.41	0.27	0.00	1.00	0.26	0.00	0.42
Avail Cap(c_a), veh/h	284	0	272	155	0	292	568	0	1024	149	0	986
HCM Platoon Ratio	1.00	1.00	1.00	1.00	1.00	1.00	1.00	1.00	1.00	1.00	1.00	1.00
Upstream Filter(I)	1.00	0.00	1.00	1.00	0.00	1.00	1.00	0.00	1.00	1.00	0.00	1.00
Uniform Delay (d), s/veh	37.4	0.0	45.3	37.0	0.0	40.7	11.2	0.0	23.7	25.9	0.0	15.2
Incr Delay (d2), s/veh	1.1	0.0	62.8	9.6	0.0	0.9	0.3	0.0	29.1	1.2	0.0	0.3
Initial Q Delay(d3),s/veh	0.0	0.0	0.0	0.0	0.0	0.0	0.0	0.0	0.0	0.0	0.0	0.0
%ile BackOfQ(50%),veh/ln	0.9	0.0	12.8	2.9	0.0	3.3	2.0	0.0	38.4	0.5	0.0	7.4
LnGrp Delay(d),s/veh	38.5	0.0	108.1	46.6	0.0	41.6	11.4	0.0	52.8	27.1	0.0	15.5
LnGrp LOS	D		F	D		D	B		F	C		B
Approach Vol, veh/h		406			222			1178			439	
Approach Delay, s/veh		86.5			43.9			47.5			16.3	
Approach LOS		F			D			D			B	

Timer	1	2	3	4	5	6	7	8
Assigned Phs	1	2	3	4	5	6	7	8
Phs Duration (G+Y+Rc), s	10.8	22.8	11.5	62.9	10.8	22.8	8.4	66.0
Change Period (Y+Rc), s	5.4	5.4	5.4	5.4	5.4	5.4	5.4	5.4
Max Green Setting (Gmax), s	5.4	17.4	7.0	58.6	5.4	17.4	5.0	60.6
Max Q Clear Time (g_c+I1), s	7.2	19.4	6.1	16.7	7.4	8.4	2.8	62.6
Green Ext Time (p_c), s	0.0	0.0	0.0	16.6	0.0	1.6	0.0	0.0

Intersection Summary	
HCM 2010 Ctrl Delay	48.1
HCM 2010 LOS	D

Movement	EBL	EBT	EBR	WBL	WBT	WBR	NBL	NBT	NBR	SBL	SBT	SBR
Lane Configurations												
Traffic Volume (veh/h)	100	1530	70	20	720	60	0	0	100	40	20	40
Future Volume (veh/h)	100	1530	70	20	720	60	0	0	100	40	20	40
Number	5	2	12	1	6	16	3	8	18	7	4	14
Initial Q (Qb), veh	0	0	0	0	0	0	0	0	0	0	0	0
Ped-Bike Adj(A_pbT)	1.00		1.00	1.00		1.00	1.00		1.00	1.00		1.00
Parking Bus, Adj	1.00	1.00	1.00	1.00	1.00	1.00	1.00	1.00	1.00	1.00	1.00	1.00
Adj Sat Flow, veh/h/ln	1863	1863	1900	1863	1863	1900	0	1863	1900	1900	1863	1863
Adj Flow Rate, veh/h	109	1663	76	22	783	65	0	0	109	43	22	43
Adj No. of Lanes	1	2	0	1	2	0	0	1	0	0	1	1
Peak Hour Factor	0.92	0.92	0.92	0.92	0.92	0.92	0.92	0.92	0.92	0.92	0.92	0.92
Percent Heavy Veh, %	2	2	2	2	2	2	0	2	2	2	2	2
Cap, veh/h	536	2811	128	253	2484	206	0	0	186	87	37	186
Arrive On Green	0.06	1.00	1.00	0.75	0.75	0.75	0.00	0.00	0.12	0.12	0.12	0.12
Sat Flow, veh/h	1774	3448	157	277	3309	275	0	0	1583	419	316	1583
Grp Volume(v), veh/h	109	850	889	22	419	429	0	0	109	65	0	43
Grp Sat Flow(s),veh/h/ln	1774	1770	1835	277	1770	1814	0	0	1583	736	0	1583
Q Serve(g_s), s	2.2	0.0	0.0	3.4	12.4	12.4	0.0	0.0	10.4	5.8	0.0	3.9
Cycle Q Clear(g_c), s	2.2	0.0	0.0	3.4	12.4	12.4	0.0	0.0	10.4	16.3	0.0	3.9
Prop In Lane	1.00		0.09	1.00		0.15	0.00		1.00	0.66		1.00
Lane Grp Cap(c), veh/h	536	1443	1496	253	1328	1362	0	0	186	124	0	186
V/C Ratio(X)	0.20	0.59	0.59	0.09	0.32	0.32	0.00	0.00	0.59	0.53	0.00	0.23
Avail Cap(c_a), veh/h	632	1443	1496	253	1328	1362	0	0	234	167	0	234
HCM Platoon Ratio	2.00	2.00	2.00	1.00	1.00	1.00	1.00	1.00	1.00	1.00	1.00	1.00
Upstream Filter(I)	0.62	0.62	0.62	0.90	0.90	0.90	0.00	0.00	1.00	1.00	0.00	1.00
Uniform Delay (d), s/veh	4.3	0.0	0.0	5.4	6.5	6.5	0.0	0.0	67.0	72.3	0.0	64.1
Incr Delay (d2), s/veh	0.1	1.1	1.1	0.6	0.6	0.5	0.0	0.0	2.9	3.4	0.0	0.6
Initial Q Delay(d3),s/veh	0.0	0.0	0.0	0.0	0.0	0.0	0.0	0.0	0.0	0.0	0.0	0.0
%ile BackOfQ(50%),veh/ln	1.1	0.4	0.5	0.3	6.3	6.4	0.0	0.0	4.7	3.0	0.0	3.6
LnGrp Delay(d),s/veh	4.4	1.1	1.1	6.0	7.1	7.1	0.0	0.0	69.9	75.8	0.0	64.7
LnGrp LOS	A	A	A	A	A	A			E	E		E
Approach Vol, veh/h		1848			870			109			108	
Approach Delay, s/veh		1.3			7.0			69.9			71.4	
Approach LOS		A			A			E			E	

Timer	1	2	3	4	5	6	7	8
Assigned Phs		2		4	5	6		8
Phs Duration (G+Y+Rc), s		135.9		24.1	10.4	125.5		24.1
Change Period (Y+Rc), s		5.4		5.4	5.4	5.4		5.4
Max Green Setting (Gmax), s		125.6		23.6	13.6	106.6		23.6
Max Q Clear Time (g_c+I1), s		2.0		18.3	4.2	14.4		12.4
Green Ext Time (p_c), s		47.3		0.5	0.1	43.0		0.8

Intersection Summary	
HCM 2010 Ctrl Delay	8.1
HCM 2010 LOS	A

Movement	EBL	EBT	EBR	WBL	WBT	WBR	NBL	NBT	NBR	SBL	SBT	SBR
Lane Configurations												
Traffic Volume (veh/h)	120	1360	120	10	700	50	150	40	230	110	20	80
Future Volume (veh/h)	120	1360	120	10	700	50	150	40	230	110	20	80
Number	5	2	12	1	6	16	3	8	18	7	4	14
Initial Q (Qb), veh	0	0	0	0	0	0	0	0	0	0	0	0
Ped-Bike Adj(A_pbT)	1.00		1.00	1.00		1.00	1.00		1.00	1.00		1.00
Parking Bus, Adj	1.00	1.00	1.00	1.00	1.00	1.00	1.00	1.00	1.00	1.00	1.00	1.00
Adj Sat Flow, veh/h/ln	1863	1863	1900	1863	1863	1900	1863	1863	1863	1863	1863	1863
Adj Flow Rate, veh/h	130	1478	130	11	761	54	163	43	250	120	22	87
Adj No. of Lanes	1	2	0	1	2	0	1	1	1	1	1	1
Peak Hour Factor	0.92	0.92	0.92	0.92	0.92	0.92	0.92	0.92	0.92	0.92	0.92	0.92
Percent Heavy Veh, %	2	2	2	2	2	2	2	2	2	2	2	2
Cap, veh/h	502	2331	204	182	2297	163	265	128	128	230	85	127
Arrive On Green	0.02	0.47	0.47	0.01	0.69	0.69	0.10	0.07	0.07	0.08	0.05	0.05
Sat Flow, veh/h	1774	3294	288	1774	3353	238	1774	1863	1583	1774	1863	1583
Grp Volume(v), veh/h	130	790	818	11	402	413	163	43	250	120	22	87
Grp Sat Flow(s),veh/h/ln	1774	1770	1812	1774	1770	1821	1774	1863	1583	1774	1863	1583
Q Serve(g_s), s	3.5	53.6	54.5	0.3	14.8	14.8	13.8	3.5	11.0	10.2	1.8	7.3
Cycle Q Clear(g_c), s	3.5	53.6	54.5	0.3	14.8	14.8	13.8	3.5	11.0	10.2	1.8	7.3
Prop In Lane	1.00		0.16	1.00		0.13	1.00		1.00	1.00		1.00
Lane Grp Cap(c), veh/h	502	1253	1282	182	1212	1248	265	128	128	230	85	127
V/C Ratio(X)	0.26	0.63	0.64	0.06	0.33	0.33	0.61	0.34	1.95	0.52	0.26	0.69
Avail Cap(c_a), veh/h	543	1253	1282	424	1212	1248	315	128	128	268	85	127
HCM Platoon Ratio	0.67	0.67	0.67	1.00	1.00	1.00	1.00	1.00	1.00	1.00	1.00	1.00
Upstream Filter(I)	0.80	0.80	0.80	0.96	0.96	0.96	1.00	1.00	1.00	1.00	1.00	1.00
Uniform Delay (d), s/veh	7.7	26.4	26.6	15.7	10.3	10.3	64.1	71.0	73.5	66.2	73.8	71.6
Incr Delay (d2), s/veh	0.2	1.9	2.0	0.1	0.7	0.7	2.6	1.5	456.1	1.8	1.6	14.3
Initial Q Delay(d3),s/veh	0.0	0.0	0.0	0.0	0.0	0.0	0.0	0.0	0.0	0.0	0.0	0.0
%ile BackOfQ(50%),veh/ln	1.7	26.8	27.9	0.2	7.4	7.6	6.9	1.9	21.9	5.1	1.0	4.3
LnGrp Delay(d),s/veh	7.9	28.3	28.6	15.9	11.0	10.9	66.7	72.5	529.6	68.0	75.4	85.9
LnGrp LOS	A	C	C	B	B	B	E	E	F	E	E	F
Approach Vol, veh/h		1738			826			456			229	
Approach Delay, s/veh		26.9			11.0			321.0			75.5	
Approach LOS		C			B			F			E	

Timer	1	2	3	4	5	6	7	8
Assigned Phs	1	2	3	4	5	6	7	8
Phs Duration (G+Y+Rc), s	7.3	118.6	21.4	12.7	11.0	115.0	17.6	16.4
Change Period (Y+Rc), s	5.4	5.4	5.4	5.4	5.4	5.4	5.4	5.4
Max Green Setting (Gmax), s	23.8	87.9	20.4	6.3	9.2	102.5	15.7	11.0
Max Q Clear Time (g_c+I1), s	2.3	56.5	15.8	9.3	5.5	16.8	12.2	13.0
Green Ext Time (p_c), s	0.0	20.8	0.2	0.0	0.1	34.0	0.1	0.0

Intersection Summary	
HCM 2010 Ctrl Delay	67.6
HCM 2010 LOS	E

Movement	EBL	EBT	WBT	WBR	SBL	SBR
Lane Configurations						
Traffic Volume (veh/h)	120	2370	1960	220	300	20
Future Volume (veh/h)	120	2370	1960	220	300	20
Number	5	2	6	16	7	14
Initial Q (Qb), veh	0	0	0	0	0	0
Ped-Bike Adj(A_pbT)	1.00			1.00	1.00	1.00
Parking Bus, Adj	1.00	1.00	1.00	1.00	1.00	1.00
Adj Sat Flow, veh/h/ln	1863	1863	1863	1900	1863	1863
Adj Flow Rate, veh/h	130	2576	2130	239	326	22
Adj No. of Lanes	1	3	3	0	2	1
Peak Hour Factor	0.92	0.92	0.92	0.92	0.92	0.92
Percent Heavy Veh, %	2	2	2	2	2	2
Cap, veh/h	182	4181	3519	389	380	175
Arrive On Green	0.06	1.00	0.76	0.76	0.11	0.11
Sat Flow, veh/h	1774	5253	4816	514	3442	1583
Grp Volume(v), veh/h	130	2576	1546	823	326	22
Grp Sat Flow(s),veh/h/ln	1774	1695	1695	1772	1721	1583
Q Serve(g_s), s	2.6	0.0	32.5	33.7	14.9	2.0
Cycle Q Clear(g_c), s	2.6	0.0	32.5	33.7	14.9	2.0
Prop In Lane	1.00			0.29	1.00	1.00
Lane Grp Cap(c), veh/h	182	4181	2567	1342	380	175
V/C Ratio(X)	0.72	0.62	0.60	0.61	0.86	0.13
Avail Cap(c_a), veh/h	333	4181	2567	1342	529	243
HCM Platoon Ratio	2.00	2.00	1.00	1.00	1.00	1.00
Upstream Filter(I)	0.72	0.72	0.09	0.09	1.00	1.00
Uniform Delay (d), s/veh	21.8	0.0	8.7	8.8	69.9	64.2
Incr Delay (d2), s/veh	3.8	0.5	0.1	0.2	9.9	0.3
Initial Q Delay(d3),s/veh	0.0	0.0	0.0	0.0	0.0	0.0
%ile BackOfQ(50%),veh/ln	4.5	0.2	15.1	16.3	7.6	1.9
LnGrp Delay(d),s/veh	25.6	0.5	8.8	9.0	79.8	64.5
LnGrp LOS	C	A	A	A	E	E
Approach Vol, veh/h		2706	2369		348	
Approach Delay, s/veh		1.7	8.8		78.9	
Approach LOS		A	A		E	

Timer	1	2	3	4	5	6	7	8
Assigned Phs		2		4	5	6		
Phs Duration (G+Y+Rc), s		136.9		23.1	10.4	126.6		
Change Period (Y+Rc), s		5.4		5.4	5.4	5.4		
Max Green Setting (Gmax), s		124.6		24.6	18.6	100.6		
Max Q Clear Time (g_c+I1), s		2.0		16.9	4.6	35.7		
Green Ext Time (p_c), s		117.5		0.8	0.2	63.4		

Intersection Summary	
HCM 2010 Ctrl Delay	9.8
HCM 2010 LOS	A

Movement	EBT	EBR	WBL	WBT	NBL	NBR
Lane Configurations						
Traffic Volume (veh/h)	2270	120	100	1920	10	100
Future Volume (veh/h)	2270	120	100	1920	10	100
Number	2	12	1	6	3	18
Initial Q (Qb), veh	0	0	0	0	0	0
Ped-Bike Adj(A_pbT)		1.00	1.00		1.00	1.00
Parking Bus, Adj	1.00	1.00	1.00	1.00	1.00	1.00
Adj Sat Flow, veh/h/ln	1863	1900	1863	1863	1863	1863
Adj Flow Rate, veh/h	2467	130	109	2087	11	109
Adj No. of Lanes	3	0	1	3	1	2
Peak Hour Factor	0.92	0.92	0.92	0.92	0.92	0.92
Percent Heavy Veh, %	2	2	2	2	2	2
Cap, veh/h	4041	211	197	4481	91	143
Arrive On Green	1.00	1.00	0.03	0.88	0.05	0.05
Sat Flow, veh/h	5117	258	1774	5253	1774	2787
Grp Volume(v), veh/h	1682	915	109	2087	11	109
Grp Sat Flow(s),veh/h/ln	1695	1817	1774	1695	1774	1393
Q Serve(g_s), s	0.0	0.0	1.5	13.2	0.9	6.2
Cycle Q Clear(g_c), s	0.0	0.0	1.5	13.2	0.9	6.2
Prop In Lane		0.14	1.00		1.00	1.00
Lane Grp Cap(c), veh/h	2768	1484	197	4481	91	143
V/C Ratio(X)	0.61	0.62	0.55	0.47	0.12	0.76
Avail Cap(c_a), veh/h	2768	1484	348	4481	118	185
HCM Platoon Ratio	2.00	2.00	1.00	1.00	1.00	1.00
Upstream Filter(I)	0.56	0.56	0.68	0.68	1.00	1.00
Uniform Delay (d), s/veh	0.0	0.0	1.8	1.9	72.4	74.9
Incr Delay (d2), s/veh	0.6	1.1	1.7	0.2	0.6	12.9
Initial Q Delay(d3),s/veh	0.0	0.0	0.0	0.0	0.0	0.0
%ile BackOfQ(50%),veh/ln	0.2	0.5	0.8	6.1	0.5	2.6
LnGrp Delay(d),s/veh	0.6	1.1	3.5	2.2	73.0	87.8
LnGrp LOS	A	A	A	A	E	F
Approach Vol, veh/h	2597			2196	120	
Approach Delay, s/veh	0.8			2.2	86.4	
Approach LOS	A			A	F	

Timer	1	2	3	4	5	6	7	8
Assigned Phs	1	2				6		8
Phs Duration (G+Y+Rc), s	10.4	136.0				146.4		13.6
Change Period (Y+Rc), s	5.4	5.4				5.4		5.4
Max Green Setting (Gmax), s	18.6	114.6				138.6		10.6
Max Q Clear Time (g_c+I1), s	3.5	2.0				15.2		8.2
Green Ext Time (p_c), s	0.2	105.9				115.4		0.1

Intersection Summary	
HCM 2010 Ctrl Delay	3.5
HCM 2010 LOS	A

HCM 2010 analysis supports speed limit in the range of 25 and 55 mph

Movement	EBL	EBT	WBT	WBR	SBL	SBR
Lane Configurations						
Traffic Volume (veh/h)	100	1850	1530	80	100	10
Future Volume (veh/h)	100	1850	1530	80	100	10
Number	5	2	6	16	7	14
Initial Q (Qb), veh	0	0	0	0	0	0
Ped-Bike Adj(A_pbT)	1.00			1.00	1.00	1.00
Parking Bus, Adj	1.00	1.00	1.00	1.00	1.00	1.00
Adj Sat Flow, veh/h/ln	1863	1863	1863	1900	1863	1863
Adj Flow Rate, veh/h	109	2011	1663	87	109	11
Adj No. of Lanes	1	3	3	0	1	1
Peak Hour Factor	0.92	0.92	0.92	0.92	0.92	0.92
Percent Heavy Veh, %	2	2	2	2	2	2
Cap, veh/h	289	4364	3927	205	132	118
Arrive On Green	0.03	0.86	0.79	0.79	0.07	0.07
Sat Flow, veh/h	1774	5253	5116	259	1774	1583
Grp Volume(v), veh/h	109	2011	1139	611	109	11
Grp Sat Flow(s),veh/h/ln	1774	1695	1695	1817	1774	1583
Q Serve(g_s), s	1.7	14.8	16.7	16.7	9.7	1.0
Cycle Q Clear(g_c), s	1.7	14.8	16.7	16.7	9.7	1.0
Prop In Lane	1.00			0.14	1.00	1.00
Lane Grp Cap(c), veh/h	289	4364	2690	1442	132	118
V/C Ratio(X)	0.38	0.46	0.42	0.42	0.83	0.09
Avail Cap(c_a), veh/h	451	4364	2690	1442	295	263
HCM Platoon Ratio	1.00	1.00	1.00	1.00	1.00	1.00
Upstream Filter(I)	1.00	1.00	0.88	0.88	1.00	1.00
Uniform Delay (d), s/veh	4.1	2.7	5.1	5.1	73.0	69.0
Incr Delay (d2), s/veh	0.8	0.4	0.1	0.2	12.2	0.3
Initial Q Delay(d3),s/veh	0.0	0.0	0.0	0.0	0.0	0.0
%ile BackOfQ(50%),veh/ln	1.0	6.8	7.8	8.4	5.2	0.9
LnGrp Delay(d),s/veh	4.9	3.0	5.2	5.3	85.3	69.4
LnGrp LOS	A	A	A	A	F	E
Approach Vol, veh/h		2120	1750		120	
Approach Delay, s/veh		3.1	5.3		83.8	
Approach LOS		A	A		F	

Timer	1	2	3	4	5	6	7	8
Assigned Phs		2		4	5	6		
Phs Duration (G+Y+Rc), s		142.7		17.3	10.4	132.4		
Change Period (Y+Rc), s		5.4		5.4	5.4	5.4		
Max Green Setting (Gmax), s		122.6		26.6	19.6	97.6		
Max Q Clear Time (g_c+I1), s		16.8		11.7	3.7	18.7		
Green Ext Time (p_c), s		84.6		0.2	0.2	66.6		

Intersection Summary	
HCM 2010 Ctrl Delay	6.5
HCM 2010 LOS	A

Movement	EBL	EBT	EBR	WBL	WBT	WBR	NBL	NBT	NBR	SBL	SBT	SBR
Lane Configurations												
Traffic Volume (veh/h)	30	1260	30	20	710	20	20	0	90	80	0	30
Future Volume (veh/h)	30	1260	30	20	710	20	20	0	90	80	0	30
Number	5	2	12	1	6	16	3	8	18	7	4	14
Initial Q (Qb), veh	0	0	0	0	0	0	0	0	0	0	0	0
Ped-Bike Adj(A_pbT)	1.00		1.00	1.00		1.00	1.00		1.00	1.00		1.00
Parking Bus, Adj	1.00	1.00	1.00	1.00	1.00	1.00	1.00	1.00	1.00	1.00	1.00	1.00
Adj Sat Flow, veh/h/ln	1863	1863	1900	1863	1863	1900	1900	1863	1900	1900	1863	1863
Adj Flow Rate, veh/h	33	1370	33	22	772	22	22	0	98	87	0	33
Adj No. of Lanes	1	2	0	1	2	0	0	2	0	0	1	1
Peak Hour Factor	0.92	0.92	0.92	0.92	0.92	0.92	0.92	0.92	0.92	0.92	0.92	0.92
Percent Heavy Veh, %	2	2	2	2	2	2	2	2	2	2	2	2
Cap, veh/h	521	2548	61	354	2519	72	88	0	228	170	0	250
Arrive On Green	0.05	1.00	1.00	0.02	0.72	0.72	0.16	0.00	0.16	0.16	0.00	0.16
Sat Flow, veh/h	1774	3532	85	1774	3515	100	273	0	1441	790	0	1583
Grp Volume(v), veh/h	33	686	717	22	389	405	22	0	98	87	0	33
Grp Sat Flow(s),veh/h/ln	1774	1770	1848	1774	1770	1845	273	0	1441	790	0	1583
Q Serve(g_s), s	0.8	0.0	0.0	0.5	12.8	12.8	2.5	0.0	9.8	10.4	0.0	2.9
Cycle Q Clear(g_c), s	0.8	0.0	0.0	0.5	12.8	12.8	22.8	0.0	9.8	20.3	0.0	2.9
Prop In Lane	1.00		0.05	1.00		0.05	1.00		1.00	1.00		1.00
Lane Grp Cap(c), veh/h	521	1276	1333	354	1268	1323	88	0	228	170	0	250
V/C Ratio(X)	0.06	0.54	0.54	0.06	0.31	0.31	0.25	0.00	0.43	0.51	0.00	0.13
Avail Cap(c_a), veh/h	563	1276	1333	403	1268	1323	125	0	267	205	0	293
HCM Platoon Ratio	2.00	2.00	2.00	1.00	1.00	1.00	1.00	1.00	1.00	1.00	1.00	1.00
Upstream Filter(I)	0.83	0.83	0.83	0.39	0.39	0.39	1.00	0.00	1.00	1.00	0.00	1.00
Uniform Delay (d), s/veh	5.9	0.0	0.0	5.6	8.2	8.2	76.3	0.0	60.9	70.0	0.0	57.9
Incr Delay (d2), s/veh	0.0	1.3	1.3	0.0	0.2	0.2	1.5	0.0	1.3	2.4	0.0	0.2
Initial Q Delay(d3),s/veh	0.0	0.0	0.0	0.0	0.0	0.0	0.0	0.0	0.0	0.0	0.0	0.0
%ile BackOfQ(50%),veh/ln	0.4	0.5	0.5	0.3	6.2	6.5	1.0	0.0	4.0	3.8	0.0	1.3
LnGrp Delay(d),s/veh	5.9	1.3	1.3	5.7	8.5	8.5	77.7	0.0	62.2	72.4	0.0	58.2
LnGrp LOS	A	A	A	A	A	A	E		E	E		E
Approach Vol, veh/h		1436			816			120			120	
Approach Delay, s/veh		1.4			8.4			65.0			68.5	
Approach LOS		A			A			E			E	

Timer	1	2	3	4	5	6	7	8
Assigned Phs	1	2		4	5	6		8
Phs Duration (G+Y+Rc), s	8.5	120.8		30.7	9.2	120.1		30.7
Change Period (Y+Rc), s	5.4	5.4		5.4	5.4	5.4		5.4
Max Green Setting (Gmax), s	7.6	106.6		29.6	7.6	106.6		29.6
Max Q Clear Time (g_c+I1), s	2.5	2.0		22.3	2.8	14.8		24.8
Green Ext Time (p_c), s	0.0	28.9		0.7	0.0	28.3		0.5

Intersection Summary	
HCM 2010 Ctrl Delay	10.0
HCM 2010 LOS	A

Movement	EBL	EBT	EBR	WBL	WBT	WBR	NBL	NBT	NBR	SBL	SBT	SBR
Lane Configurations												
Traffic Volume (veh/h)	30	1040	30	60	680	60	30	80	110	110	80	30
Future Volume (veh/h)	30	1040	30	60	680	60	30	80	110	110	80	30
Number	5	2	12	1	6	16	3	8	18	7	4	14
Initial Q (Qb), veh	0	0	0	0	0	0	0	0	0	0	0	0
Ped-Bike Adj(A_pbT)	1.00		1.00	1.00		1.00	1.00		1.00	1.00		1.00
Parking Bus, Adj	1.00	1.00	1.00	1.00	1.00	1.00	1.00	1.00	1.00	1.00	1.00	1.00
Adj Sat Flow, veh/h/ln	1863	1863	1900	1863	1863	1900	1863	1863	1900	1863	1863	1900
Adj Flow Rate, veh/h	33	1130	33	65	739	65	33	87	120	120	87	33
Adj No. of Lanes	1	2	0	1	2	0	1	1	0	1	1	0
Peak Hour Factor	0.92	0.92	0.92	0.92	0.92	0.92	0.92	0.92	0.92	0.92	0.92	0.92
Percent Heavy Veh, %	2	2	2	2	2	2	2	2	2	2	2	2
Cap, veh/h	440	2193	64	398	2074	182	250	101	139	193	241	91
Arrive On Green	0.05	1.00	1.00	0.03	0.63	0.63	0.02	0.14	0.14	0.07	0.19	0.19
Sat Flow, veh/h	1774	3512	103	1774	3292	289	1774	710	980	1774	1288	489
Grp Volume(v), veh/h	33	569	594	65	397	407	33	0	207	120	0	120
Grp Sat Flow(s),veh/h/ln	1774	1770	1845	1774	1770	1812	1774	0	1690	1774	0	1777
Q Serve(g_s), s	1.1	0.0	0.0	2.1	17.1	17.1	2.5	0.0	19.2	9.0	0.0	9.4
Cycle Q Clear(g_c), s	1.1	0.0	0.0	2.1	17.1	17.1	2.5	0.0	19.2	9.0	0.0	9.4
Prop In Lane	1.00		0.06	1.00		0.16	1.00		0.58	1.00		0.28
Lane Grp Cap(c), veh/h	440	1105	1152	398	1115	1141	250	0	240	193	0	332
V/C Ratio(X)	0.07	0.52	0.52	0.16	0.36	0.36	0.13	0.00	0.86	0.62	0.00	0.36
Avail Cap(c_a), veh/h	462	1105	1152	452	1115	1141	271	0	355	233	0	471
HCM Platoon Ratio	2.00	2.00	2.00	1.00	1.00	1.00	1.00	1.00	1.00	1.00	1.00	1.00
Upstream Filter(I)	0.91	0.91	0.91	0.97	0.97	0.97	1.00	0.00	1.00	1.00	0.00	1.00
Uniform Delay (d), s/veh	10.7	0.0	0.0	9.9	14.1	14.1	56.7	0.0	67.1	53.3	0.0	56.7
Incr Delay (d2), s/veh	0.1	1.6	1.5	0.2	0.9	0.8	0.2	0.0	13.5	3.6	0.0	0.7
Initial Q Delay(d3),s/veh	0.0	0.0	0.0	0.0	0.0	0.0	0.0	0.0	0.0	0.0	0.0	0.0
%ile BackOfQ(50%),veh/ln	0.5	0.5	0.5	1.0	8.7	8.9	1.3	0.0	9.9	4.6	0.0	4.7
LnGrp Delay(d),s/veh	10.7	1.6	1.5	10.1	15.0	15.0	57.0	0.0	80.6	56.9	0.0	57.4
LnGrp LOS	B	A	A	B	B	B	E		F	E		E
Approach Vol, veh/h		1196			869			240			240	
Approach Delay, s/veh		1.8			14.6			77.4			57.1	
Approach LOS		A			B			E			E	

Timer	1	2	3	4	5	6	7	8
Assigned Phs	1	2	3	4	5	6	7	8
Phs Duration (G+Y+Rc), s	10.1	105.3	9.2	35.3	9.2	106.2	16.4	28.1
Change Period (Y+Rc), s	5.4	5.4	5.4	5.4	5.4	5.4	5.4	5.4
Max Green Setting (Gmax), s	9.6	80.6	5.8	42.4	5.8	84.4	14.6	33.6
Max Q Clear Time (g_c+I1), s	4.1	2.0	4.5	11.4	3.1	19.1	11.0	21.2
Green Ext Time (p_c), s	0.0	21.3	0.0	2.1	0.0	20.6	0.1	1.5

Intersection Summary	
HCM 2010 Ctrl Delay	18.5
HCM 2010 LOS	B

Movement	EBT	EBR	WBL	WBT	NBL	NBR
Lane Configurations						
Traffic Volume (veh/h)	820	40	80	700	100	230
Future Volume (veh/h)	820	40	80	700	100	230
Number	2	12	1	6	3	18
Initial Q (Qb), veh	0	0	0	0	0	0
Ped-Bike Adj(A_pbT)		1.00	1.00		1.00	1.00
Parking Bus, Adj	1.00	1.00	1.00	1.00	1.00	1.00
Adj Sat Flow, veh/h/ln	1863	1900	1863	1863	1863	1863
Adj Flow Rate, veh/h	891	43	87	761	109	250
Adj No. of Lanes	2	0	1	2	1	1
Peak Hour Factor	0.92	0.92	0.92	0.92	0.92	0.92
Percent Heavy Veh, %	2	2	2	2	2	2
Cap, veh/h	2416	117	457	2716	293	310
Arrive On Green	0.70	0.70	0.03	0.77	0.17	0.17
Sat Flow, veh/h	3530	166	1774	3632	1774	1583
Grp Volume(v), veh/h	459	475	87	761	109	250
Grp Sat Flow(s),veh/h/ln	1770	1833	1774	1770	1774	1583
Q Serve(g_s), s	16.6	16.6	2.1	10.2	8.7	24.1
Cycle Q Clear(g_c), s	16.6	16.6	2.1	10.2	8.7	24.1
Prop In Lane		0.09	1.00		1.00	1.00
Lane Grp Cap(c), veh/h	1244	1289	457	2716	293	310
V/C Ratio(X)	0.37	0.37	0.19	0.28	0.37	0.81
Avail Cap(c_a), veh/h	1244	1289	764	2716	317	331
HCM Platoon Ratio	1.00	1.00	1.00	1.00	1.00	1.00
Upstream Filter(I)	1.00	1.00	0.94	0.94	1.00	1.00
Uniform Delay (d), s/veh	9.5	9.5	6.7	5.5	59.4	61.4
Incr Delay (d2), s/veh	0.8	0.8	0.2	0.1	0.8	12.9
Initial Q Delay(d3),s/veh	0.0	0.0	0.0	0.0	0.0	0.0
%ile BackOfQ(50%),veh/ln	8.3	8.6	1.0	5.0	4.4	11.6
LnGrp Delay(d),s/veh	10.4	10.3	6.9	5.6	60.2	74.4
LnGrp LOS	B	B	A	A	E	E
Approach Vol, veh/h	934			848	359	
Approach Delay, s/veh	10.4			5.7	70.1	
Approach LOS	B			A	E	

Timer	1	2	3	4	5	6	7	8
Assigned Phs	1	2				6		8
Phs Duration (G+Y+Rc), s	10.3	117.9				128.2		31.8
Change Period (Y+Rc), s	5.4	5.4				5.4		5.4
Max Green Setting (Gmax), s	32.6	82.6				120.6		28.6
Max Q Clear Time (g_c+I1), s	4.1	18.6				12.2		26.1
Green Ext Time (p_c), s	0.2	16.5				17.2		0.3

Intersection Summary	
HCM 2010 Ctrl Delay	18.5
HCM 2010 LOS	B

Movement	EBL	EBT	EBR	WBL	WBT	WBR	NBL	NBT	NBR	SBL	SBT	SBR
Lane Configurations												
Traffic Volume (veh/h)	50	510	50	40	760	40	80	130	120	190	110	30
Future Volume (veh/h)	50	510	50	40	760	40	80	130	120	190	110	30
Number	5	2	12	1	6	16	3	8	18	7	4	14
Initial Q (Qb), veh	0	0	0	0	0	0	0	0	0	0	0	0
Ped-Bike Adj(A_pbT)	1.00		1.00	1.00		1.00	1.00		1.00	1.00		1.00
Parking Bus, Adj	1.00	1.00	1.00	1.00	1.00	1.00	1.00	1.00	1.00	1.00	1.00	1.00
Adj Sat Flow, veh/h/ln	1863	1863	1900	1863	1863	1900	1863	1863	1900	1863	1863	1900
Adj Flow Rate, veh/h	54	554	54	43	826	43	87	141	130	207	120	33
Adj No. of Lanes	1	1	0	1	1	0	1	1	0	1	1	0
Peak Hour Factor	0.92	0.92	0.92	0.92	0.92	0.92	0.92	0.92	0.92	0.92	0.92	0.92
Percent Heavy Veh, %	2	2	2	2	2	2	2	2	2	2	2	2
Cap, veh/h	181	925	90	350	971	51	403	290	267	300	456	125
Arrive On Green	0.55	0.55	0.55	0.55	0.55	0.55	0.32	0.32	0.32	0.32	0.32	0.32
Sat Flow, veh/h	635	1671	163	809	1755	91	1229	894	824	1104	1407	387
Grp Volume(v), veh/h	54	0	608	43	0	869	87	0	271	207	0	153
Grp Sat Flow(s),veh/h/ln	635	0	1834	809	0	1847	1229	0	1717	1104	0	1794
Q Serve(g_s), s	6.9	0.0	19.5	3.3	0.0	35.0	5.0	0.0	11.2	16.3	0.0	5.6
Cycle Q Clear(g_c), s	41.9	0.0	19.5	22.8	0.0	35.0	10.5	0.0	11.2	27.5	0.0	5.6
Prop In Lane	1.00		0.09	1.00		0.05	1.00		0.48	1.00		0.22
Lane Grp Cap(c), veh/h	181	0	1015	350	0	1022	403	0	557	300	0	582
V/C Ratio(X)	0.30	0.00	0.60	0.12	0.00	0.85	0.22	0.00	0.49	0.69	0.00	0.26
Avail Cap(c_a), veh/h	194	0	1052	367	0	1059	403	0	557	300	0	582
HCM Platoon Ratio	1.00	1.00	1.00	1.00	1.00	1.00	1.00	1.00	1.00	1.00	1.00	1.00
Upstream Filter(I)	1.00	0.00	1.00	1.00	0.00	1.00	1.00	0.00	1.00	1.00	0.00	1.00
Uniform Delay (d), s/veh	34.3	0.0	13.2	20.8	0.0	16.6	25.9	0.0	23.9	34.9	0.0	22.0
Incr Delay (d2), s/veh	0.9	0.0	0.9	0.2	0.0	6.6	0.3	0.0	0.7	6.6	0.0	0.2
Initial Q Delay(d3),s/veh	0.0	0.0	0.0	0.0	0.0	0.0	0.0	0.0	0.0	0.0	0.0	0.0
%ile BackOfQ(50%),veh/ln	1.3	0.0	10.0	0.8	0.0	19.5	1.7	0.0	5.4	5.5	0.0	2.8
LnGrp Delay(d),s/veh	35.2	0.0	14.1	21.0	0.0	23.2	26.2	0.0	24.6	41.5	0.0	22.3
LnGrp LOS	D		B	C		C	C		C	D		C
Approach Vol, veh/h		662			912			358			360	
Approach Delay, s/veh		15.8			23.1			25.0			33.3	
Approach LOS		B			C			C			C	

Timer	1	2	3	4	5	6	7	8
Assigned Phs		2		4		6		8
Phs Duration (G+Y+Rc), s		54.2		34.0		54.2		34.0
Change Period (Y+Rc), s		5.4		5.4		5.4		5.4
Max Green Setting (Gmax), s		50.6		28.6		50.6		28.6
Max Q Clear Time (g_c+I1), s		43.9		29.5		37.0		13.2
Green Ext Time (p_c), s		4.9		0.0		8.5		3.5

Intersection Summary	
HCM 2010 Ctrl Delay	22.9
HCM 2010 LOS	C

Movement	EBL	EBT	EBR	WBL	WBT	WBR	NBL	NBT	NBR	SBL	SBT	SBR
Lane Configurations												
Traffic Volume (veh/h)	34	150	125	81	189	331	94	461	76	380	792	31
Future Volume (veh/h)	34	150	125	81	189	331	94	461	76	380	792	31
Number	5	2	12	1	6	16	3	8	18	7	4	14
Initial Q (Qb), veh	0	0	0	0	0	0	0	0	0	0	0	0
Ped-Bike Adj(A_pbT)	1.00		1.00	1.00		1.00	1.00		1.00	1.00		1.00
Parking Bus, Adj	1.00	1.00	1.00	1.00	1.00	1.00	1.00	1.00	1.00	1.00	1.00	1.00
Adj Sat Flow, veh/h/ln	1863	1863	1900	1863	1863	1863	1863	1863	1900	1863	1863	1900
Adj Flow Rate, veh/h	40	169	152	116	210	380	118	562	100	409	870	35
Adj No. of Lanes	1	1	0	1	1	1	1	2	0	1	2	0
Peak Hour Factor	0.86	0.89	0.82	0.70	0.90	0.87	0.80	0.82	0.76	0.93	0.91	0.88
Percent Heavy Veh, %	2	2	2	2	2	2	2	2	2	2	2	2
Cap, veh/h	296	215	194	270	496	422	303	709	126	481	1256	51
Arrive On Green	0.04	0.24	0.24	0.07	0.27	0.27	0.07	0.24	0.24	0.20	0.36	0.36
Sat Flow, veh/h	1774	905	814	1774	1863	1583	1774	3005	533	1774	3468	140
Grp Volume(v), veh/h	40	0	321	116	210	380	118	330	332	409	444	461
Grp Sat Flow(s),veh/h/ln	1774	0	1719	1774	1863	1583	1774	1770	1769	1774	1770	1838
Q Serve(g_s), s	1.4	0.0	14.2	4.0	7.6	18.9	4.0	14.3	14.4	13.3	17.4	17.4
Cycle Q Clear(g_c), s	1.4	0.0	14.2	4.0	7.6	18.9	4.0	14.3	14.4	13.3	17.4	17.4
Prop In Lane	1.00		0.47	1.00		1.00	1.00		0.30	1.00		0.08
Lane Grp Cap(c), veh/h	296	0	409	270	496	422	303	417	417	481	641	666
V/C Ratio(X)	0.14	0.00	0.78	0.43	0.42	0.90	0.39	0.79	0.80	0.85	0.69	0.69
Avail Cap(c_a), veh/h	340	0	471	270	517	440	337	437	437	585	730	759
HCM Platoon Ratio	1.00	1.00	1.00	1.00	1.00	1.00	1.00	1.00	1.00	1.00	1.00	1.00
Upstream Filter(I)	1.00	0.00	1.00	1.00	1.00	1.00	1.00	1.00	1.00	1.00	1.00	1.00
Uniform Delay (d), s/veh	22.1	0.0	29.1	22.6	24.7	28.8	21.4	29.2	29.3	18.1	22.1	22.1
Incr Delay (d2), s/veh	0.2	0.0	7.5	1.1	0.6	20.8	0.8	9.2	9.5	9.7	2.4	2.3
Initial Q Delay(d3),s/veh	0.0	0.0	0.0	0.0	0.0	0.0	0.0	0.0	0.0	0.0	0.0	0.0
%ile BackOfQ(50%),veh/ln	0.7	0.0	7.6	2.0	4.0	10.6	2.0	8.0	8.1	7.7	8.9	9.3
LnGrp Delay(d),s/veh	22.3	0.0	36.5	23.6	25.3	49.6	22.3	38.4	38.8	27.9	24.5	24.4
LnGrp LOS	C		D	C	C	D	C	D	D	C	C	C
Approach Vol, veh/h		361			706			780			1314	
Approach Delay, s/veh		34.9			38.1			36.1			25.5	
Approach LOS		C			D			D			C	

Timer	1	2	3	4	5	6	7	8
Assigned Phs	1	2	3	4	5	6	7	8
Phs Duration (G+Y+Rc), s	10.7	24.8	11.0	34.9	8.4	27.1	21.3	24.6
Change Period (Y+Rc), s	5.4	5.4	5.4	5.4	5.4	5.4	5.4	5.4
Max Green Setting (Gmax), s	5.3	22.3	7.2	33.6	5.0	22.6	20.7	20.1
Max Q Clear Time (g_c+I1), s	6.0	16.2	6.0	19.4	3.4	20.9	15.3	16.4
Green Ext Time (p_c), s	0.0	2.4	0.0	8.4	0.0	0.8	0.7	2.8

Intersection Summary	
HCM 2010 Ctrl Delay	32.0
HCM 2010 LOS	C

Movement	EBL	EBT	EBR	WBL	WBT	WBR	NBL	NBT	NBR	SBL	SBT	SBR
Lane Configurations												
Traffic Volume (veh/h)	222	564	111	547	1098	569	156	904	290	501	1931	207
Future Volume (veh/h)	222	564	111	547	1098	569	156	904	290	501	1931	207
Number	5	2	12	1	6	16	3	8	18	7	4	14
Initial Q (Qb), veh	0	0	0	0	0	0	0	0	0	0	0	0
Ped-Bike Adj(A_pbT)	1.00		1.00	1.00		1.00	1.00		1.00	1.00		1.00
Parking Bus, Adj	1.00	1.00	1.00	1.00	1.00	1.00	1.00	1.00	1.00	1.00	1.00	1.00
Adj Sat Flow, veh/h/ln	1863	1863	1900	1863	1863	1863	1863	1863	1863	1863	1863	1900
Adj Flow Rate, veh/h	274	600	123	615	1234	632	214	993	372	516	2194	244
Adj No. of Lanes	2	2	0	2	2	1	2	2	1	2	3	0
Peak Hour Factor	0.81	0.94	0.90	0.89	0.89	0.90	0.73	0.91	0.78	0.97	0.88	0.85
Percent Heavy Veh, %	2	2	2	2	2	2	2	2	2	2	2	2
Cap, veh/h	243	652	133	592	1147	764	197	1071	752	546	1880	206
Arrive On Green	0.14	0.45	0.45	0.17	0.32	0.32	0.06	0.30	0.30	0.16	0.40	0.40
Sat Flow, veh/h	3442	2928	599	3442	3539	1583	3442	3539	1583	3442	4654	509
Grp Volume(v), veh/h	274	362	361	615	1234	632	214	993	372	516	1589	849
Grp Sat Flow(s),veh/h/ln	1721	1770	1757	1721	1770	1583	1721	1770	1583	1721	1695	1773
Q Serve(g_s), s	10.6	28.8	29.0	25.8	48.6	33.7	8.6	40.8	9.0	22.3	60.6	60.6
Cycle Q Clear(g_c), s	10.6	28.8	29.0	25.8	48.6	33.7	8.6	40.8	9.0	22.3	60.6	60.6
Prop In Lane	1.00		0.34	1.00		1.00	1.00		1.00	1.00		0.29
Lane Grp Cap(c), veh/h	243	394	391	592	1147	764	197	1071	752	546	1370	716
V/C Ratio(X)	1.13	0.92	0.92	1.04	1.08	0.83	1.08	0.93	0.49	0.94	1.16	1.19
Avail Cap(c_a), veh/h	243	394	391	592	1147	764	197	1071	752	546	1370	716
HCM Platoon Ratio	2.00	2.00	2.00	1.00	1.00	1.00	1.00	1.00	1.00	1.00	1.00	1.00
Upstream Filter(I)	0.95	0.95	0.95	1.00	1.00	1.00	1.00	1.00	1.00	1.00	1.00	1.00
Uniform Delay (d), s/veh	64.4	40.3	40.4	62.1	50.7	15.7	70.7	50.7	10.3	62.5	44.7	44.7
Incr Delay (d2), s/veh	94.5	27.8	28.5	47.5	49.6	7.5	88.4	13.4	0.5	25.5	80.5	97.3
Initial Q Delay(d3),s/veh	0.0	0.0	0.0	0.0	0.0	0.0	0.0	0.0	0.0	0.0	0.0	0.0
%ile BackOfQ(50%),veh/ln	8.2	16.9	16.9	16.2	31.6	16.3	6.5	22.0	5.2	12.5	43.7	49.0
LnGrp Delay(d),s/veh	158.9	68.2	68.9	109.6	100.3	23.2	159.1	64.1	10.8	87.9	125.2	142.0
LnGrp LOS	F	E	E	F	F	C	F	E	B	F	F	F
Approach Vol, veh/h		997			2481			1579			2954	
Approach Delay, s/veh		93.4			83.0			64.4			123.5	
Approach LOS		F			F			E			F	

Timer	1	2	3	4	5	6	7	8
Assigned Phs	1	2	3	4	5	6	7	8
Phs Duration (G+Y+Rc), s	31.2	38.8	14.0	66.0	16.0	54.0	29.2	50.8
Change Period (Y+Rc), s	5.4	5.4	5.4	5.4	5.4	5.4	5.4	5.4
Max Green Setting (Gmax), s	25.8	33.4	8.6	60.6	10.6	48.6	23.8	45.4
Max Q Clear Time (g_c+I1), s	27.8	31.0	10.6	62.6	12.6	50.6	24.3	42.8
Green Ext Time (p_c), s	0.0	1.0	0.0	0.0	0.0	0.0	0.0	2.6

Intersection Summary	
HCM 2010 Ctrl Delay	95.6
HCM 2010 LOS	F

Movement	EBL	EBT	EBR	WBL	WBT	WBR	NBL	NBT	NBR	SBL	SBT	SBR
Lane Configurations												
Traffic Volume (veh/h)	110	1270	30	30	2250	110	20	10	20	270	20	30
Future Volume (veh/h)	110	1270	30	30	2250	110	20	10	20	270	20	30
Number	5	2	12	1	6	16	3	8	18	7	4	14
Initial Q (Qb), veh	0	0	0	0	0	0	0	0	0	0	0	0
Ped-Bike Adj(A_pbT)	1.00		1.00	1.00		1.00	1.00		1.00	1.00		1.00
Parking Bus, Adj	1.00	1.00	1.00	1.00	1.00	1.00	1.00	1.00	1.00	1.00	1.00	1.00
Adj Sat Flow, veh/h/ln	1863	1863	1900	1863	1863	1900	1900	1863	1900	1863	1863	1863
Adj Flow Rate, veh/h	120	1380	33	33	2446	120	22	11	22	309	0	33
Adj No. of Lanes	1	3	0	1	3	0	0	1	0	2	0	1
Peak Hour Factor	0.92	0.92	0.92	0.92	0.92	0.92	0.92	0.92	0.92	0.92	0.92	0.92
Percent Heavy Veh, %	2	2	2	2	2	2	2	2	2	2	2	2
Cap, veh/h	153	3512	84	266	3368	164	28	14	28	366	0	163
Arrive On Green	0.01	0.23	0.23	0.02	0.68	0.68	0.04	0.04	0.04	0.10	0.00	0.10
Sat Flow, veh/h	1774	5109	122	1774	4969	242	683	342	683	3548	0	1583
Grp Volume(v), veh/h	120	916	497	33	1662	904	55	0	0	309	0	33
Grp Sat Flow(s),veh/h/ln	1774	1695	1841	1774	1695	1820	1708	0	0	1774	0	1583
Q Serve(g_s), s	3.1	34.4	34.4	0.8	46.5	47.7	4.8	0.0	0.0	12.8	0.0	2.9
Cycle Q Clear(g_c), s	3.1	34.4	34.4	0.8	46.5	47.7	4.8	0.0	0.0	12.8	0.0	2.9
Prop In Lane	1.00		0.07	1.00		0.13	0.40		0.40	1.00		1.00
Lane Grp Cap(c), veh/h	153	2330	1266	266	2298	1234	70	0	0	366	0	163
V/C Ratio(X)	0.78	0.39	0.39	0.12	0.72	0.73	0.79	0.00	0.00	0.85	0.00	0.20
Avail Cap(c_a), veh/h	241	2330	1266	283	2298	1234	87	0	0	487	0	217
HCM Platoon Ratio	0.33	0.33	0.33	1.00	1.00	1.00	1.00	1.00	1.00	1.00	1.00	1.00
Upstream Filter(I)	0.94	0.94	0.94	0.79	0.79	0.79	1.00	0.00	0.00	1.00	0.00	1.00
Uniform Delay (d), s/veh	32.2	31.4	31.4	10.7	15.3	15.5	71.3	0.0	0.0	66.1	0.0	61.6
Incr Delay (d2), s/veh	8.0	0.5	0.9	0.2	1.6	3.1	31.4	0.0	0.0	10.0	0.0	0.6
Initial Q Delay(d3),s/veh	0.0	0.0	0.0	0.0	0.0	0.0	0.0	0.0	0.0	0.0	0.0	0.0
%ile BackOfQ(50%),veh/ln	3.8	16.3	17.9	0.4	22.0	24.9	2.9	0.0	0.0	6.8	0.0	1.3
LnGrp Delay(d),s/veh	40.2	31.9	32.3	10.9	16.9	18.6	102.7	0.0	0.0	76.1	0.0	62.2
LnGrp LOS	D	C	C	B	B	B	F			E		E
Approach Vol, veh/h		1533			2599			55			342	
Approach Delay, s/veh		32.7			17.4			102.7			74.8	
Approach LOS		C			B			F			E	

Timer	1	2	3	4	5	6	7	8
Assigned Phs	1	2		4	5	6		8
Phs Duration (G+Y+Rc), s	9.1	108.5		20.9	10.6	107.1		11.5
Change Period (Y+Rc), s	5.4	5.4		5.4	5.4	5.4		5.4
Max Green Setting (Gmax), s	5.2	95.0		20.6	12.6	87.6		7.6
Max Q Clear Time (g_c+I1), s	2.8	36.4		14.8	5.1	49.7		6.8
Green Ext Time (p_c), s	0.0	53.2		0.6	0.1	35.5		0.0

Intersection Summary	
HCM 2010 Ctrl Delay	27.9
HCM 2010 LOS	C

Notes

User approved volume balancing among the lanes for turning movement.

Movement	EBL	EBT	EBR	WBL	WBT	WBR	NBL	NBT	NBR	SBL	SBT	SBR
Lane Configurations												
Traffic Volume (veh/h)	643	779	322	195	1395	23	219	510	119	91	691	1176
Future Volume (veh/h)	643	779	322	195	1395	23	219	510	119	91	691	1176
Number	5	2	12	1	6	16	3	8	18	7	4	14
Initial Q (Qb), veh	0	0	0	0	0	0	0	0	0	0	0	0
Ped-Bike Adj(A_pbT)	1.00		1.00	1.00		1.00	1.00		1.00	1.00		1.00
Parking Bus, Adj	1.00	1.00	1.00	1.00	1.00	1.00	1.00	1.00	1.00	1.00	1.00	1.00
Adj Sat Flow, veh/h/ln	1863	1863	1900	1863	1863	1863	1863	1863	1863	1863	1863	1863
Adj Flow Rate, veh/h	722	906	383	212	1468	0	243	567	153	105	743	0
Adj No. of Lanes	2	2	0	1	2	1	1	2	1	1	2	1
Peak Hour Factor	0.89	0.86	0.84	0.92	0.95	0.69	0.90	0.90	0.78	0.87	0.93	0.86
Percent Heavy Veh, %	2	2	2	2	2	2	2	2	2	2	2	2
Cap, veh/h	754	1104	463	218	1170	524	185	686	459	267	852	362
Arrive On Green	0.37	0.76	0.76	0.10	0.33	0.00	0.08	0.19	0.19	0.11	0.23	0.00
Sat Flow, veh/h	3442	2432	1020	1774	3539	1583	1774	3539	1583	1774	3725	1583
Grp Volume(v), veh/h	722	657	632	212	1468	0	243	567	153	105	743	0
Grp Sat Flow(s),veh/h/ln	1721	1770	1683	1774	1770	1583	1774	1770	1583	1774	1863	1583
Q Serve(g_s), s	30.7	35.5	36.5	14.1	49.6	0.0	11.6	23.1	7.9	2.3	28.8	0.0
Cycle Q Clear(g_c), s	30.7	35.5	36.5	14.1	49.6	0.0	11.6	23.1	7.9	2.3	28.8	0.0
Prop In Lane	1.00		0.61	1.00		1.00	1.00		1.00	1.00		1.00
Lane Grp Cap(c), veh/h	754	803	764	218	1170	524	185	686	459	267	852	362
V/C Ratio(X)	0.96	0.82	0.83	0.97	1.25	0.00	1.31	0.83	0.33	0.39	0.87	0.00
Avail Cap(c_a), veh/h	754	803	764	218	1170	524	185	1064	628	267	1058	450
HCM Platoon Ratio	1.67	1.67	1.67	1.00	1.00	1.00	1.00	1.00	1.00	1.00	1.00	1.00
Upstream Filter(I)	0.89	0.89	0.89	0.79	0.79	0.00	1.00	1.00	1.00	1.00	1.00	0.00
Uniform Delay (d), s/veh	46.9	14.2	14.3	44.2	50.2	0.0	60.3	58.1	21.8	59.0	55.7	0.0
Incr Delay (d2), s/veh	21.1	8.2	9.0	45.9	120.2	0.0	173.5	3.2	0.4	0.9	6.8	0.0
Initial Q Delay(d3),s/veh	0.0	0.0	0.0	0.0	0.0	0.0	0.0	0.0	0.0	0.0	0.0	0.0
%ile BackOfQ(50%),veh/ln	16.7	18.5	18.2	9.7	43.7	0.0	10.9	11.6	3.5	4.0	15.7	0.0
LnGrp Delay(d),s/veh	68.0	22.4	23.3	90.1	170.4	0.0	233.8	61.3	22.2	59.9	62.6	0.0
LnGrp LOS	E	C	C	F	F		F	E	C	E	E	
Approach Vol, veh/h		2011			1680			963			848	
Approach Delay, s/veh		39.1			160.2			98.6			62.2	
Approach LOS		D			F			F			E	

Timer	1	2	3	4	5	6	7	8
Assigned Phs	1	2	3	4	5	6	7	8
Phs Duration (G+Y+Rc), s	19.8	73.5	17.0	39.7	38.3	55.0	22.3	34.5
Change Period (Y+Rc), s	5.4	5.4	5.4	5.4	5.4	5.4	5.4	5.4
Max Green Setting (Gmax), s	14.4	59.8	11.6	42.6	24.6	49.6	9.1	45.1
Max Q Clear Time (g_c+I1), s	16.1	38.5	13.6	30.8	32.7	51.6	4.3	25.1
Green Ext Time (p_c), s	0.0	12.1	0.0	3.5	0.0	0.0	2.1	4.0

Intersection Summary	
HCM 2010 Ctrl Delay	90.1
HCM 2010 LOS	F

Notes

User approved volume balancing among the lanes for turning movement.

Movement	EBL	EBT	EBR	WBL	WBT	WBR	NBL	NBT	NBR	SBL	SBT	SBR
Lane Configurations												
Traffic Volume (veh/h)	0	803	176	188	1214	0	0	0	0	379	21	309
Future Volume (veh/h)	0	803	176	188	1214	0	0	0	0	379	21	309
Number	5	2	12	1	6	16				7	4	14
Initial Q (Qb), veh	0	0	0	0	0	0				0	0	0
Ped-Bike Adj(A_pbT)	1.00		1.00	1.00		1.00				1.00		1.00
Parking Bus, Adj	1.00	1.00	1.00	1.00	1.00	1.00				1.00	1.00	1.00
Adj Sat Flow, veh/h/ln	0	1863	1863	1863	1863	0				1863	1863	1863
Adj Flow Rate, veh/h	0	956	0	235	1278	0				443	0	0
Adj No. of Lanes	0	2	1	1	2	0				2	0	1
Peak Hour Factor	1.00	0.84	0.92	0.80	0.95	1.00				0.91	0.56	0.90
Percent Heavy Veh, %	0	2	2	2	2	0				2	2	2
Cap, veh/h	0	2449	1096	415	2768	0				518	0	231
Arrive On Green	0.00	0.23	0.00	0.05	0.78	0.00				0.15	0.00	0.00
Sat Flow, veh/h	0	3632	1583	1774	3632	0				3548	0	1583
Grp Volume(v), veh/h	0	956	0	235	1278	0				443	0	0
Grp Sat Flow(s),veh/h/ln	0	1770	1583	1774	1770	0				1774	0	1583
Q Serve(g_s), s	0.0	34.3	0.0	5.5	18.5	0.0				18.3	0.0	0.0
Cycle Q Clear(g_c), s	0.0	34.3	0.0	5.5	18.5	0.0				18.3	0.0	0.0
Prop In Lane	0.00		1.00	1.00		0.00				1.00		1.00
Lane Grp Cap(c), veh/h	0	2449	1096	415	2768	0				518	0	231
V/C Ratio(X)	0.00	0.39	0.00	0.57	0.46	0.00				0.86	0.00	0.00
Avail Cap(c_a), veh/h	0	2449	1096	610	2768	0				1126	0	502
HCM Platoon Ratio	1.00	0.33	0.33	1.00	1.00	1.00				1.00	1.00	1.00
Upstream Filter(I)	0.00	0.45	0.00	0.85	0.85	0.00				1.00	0.00	0.00
Uniform Delay (d), s/veh	0.0	31.1	0.0	12.4	5.6	0.0				62.5	0.0	0.0
Incr Delay (d2), s/veh	0.0	0.2	0.0	1.0	0.5	0.0				4.2	0.0	0.0
Initial Q Delay(d3),s/veh	0.0	0.0	0.0	0.0	0.0	0.0				0.0	0.0	0.0
%ile BackOfQ(50%),veh/ln	0.0	16.9	0.0	4.0	9.1	0.0				9.3	0.0	0.0
LnGrp Delay(d),s/veh	0.0	31.3	0.0	13.4	6.1	0.0				66.7	0.0	0.0
LnGrp LOS		C		B	A					E		
Approach Vol, veh/h		956			1513						443	
Approach Delay, s/veh		31.3			7.2						66.7	
Approach LOS		C			A						E	

Timer	1	2	3	4	5	6	7	8
Assigned Phs	1	2		4		6		
Phs Duration (G+Y+Rc), s	13.5	109.2		27.3		122.7		
Change Period (Y+Rc), s	5.4	5.4		5.4		5.4		
Max Green Setting (Gmax), s	24.6	61.6		47.6		91.6		
Max Q Clear Time (g_c+I1), s	7.5	36.3		20.3		20.5		
Green Ext Time (p_c), s	0.6	17.6		1.6		31.1		

Intersection Summary	
HCM 2010 Ctrl Delay	24.1
HCM 2010 LOS	C

Notes

User approved volume balancing among the lanes for turning movement.

Movement	EBL	EBT	EBR	WBL	WBT	WBR	NBL	NBT	NBR	SBL	SBT	SBR
Lane Configurations												
Traffic Volume (veh/h)	157	995	0	0	1198	423	156	89	181	0	0	0
Future Volume (veh/h)	157	995	0	0	1198	423	156	89	181	0	0	0
Number	5	2	12	1	6	16	3	8	18			
Initial Q (Qb), veh	0	0	0	0	0	0	0	0	0			
Ped-Bike Adj(A_pbT)	1.00		1.00	1.00		1.00	1.00		1.00			
Parking Bus, Adj	1.00	1.00	1.00	1.00	1.00	1.00	1.00	1.00	1.00			
Adj Sat Flow, veh/h/ln	1863	1863	0	0	1863	1863	1900	1863	1863			
Adj Flow Rate, veh/h	180	1118	0	0	1261	0	181	105	0			
Adj No. of Lanes	1	2	0	0	2	1	0	2	1			
Peak Hour Factor	0.87	0.89	1.00	1.00	0.95	0.91	0.86	0.85	0.84			
Percent Heavy Veh, %	2	2	0	0	2	2	2	2	2			
Cap, veh/h	376	2855	0	0	2579	1154	215	215	192			
Arrive On Green	0.08	1.00	0.00	0.00	0.73	0.00	0.12	0.12	0.00			
Sat Flow, veh/h	1774	3632	0	0	3632	1583	1774	1770	1583			
Grp Volume(v), veh/h	180	1118	0	0	1261	0	181	105	0			
Grp Sat Flow(s),veh/h/ln	1774	1770	0	0	1770	1583	1774	1770	1583			
Q Serve(g_s), s	3.9	0.0	0.0	0.0	22.5	0.0	15.0	8.3	0.0			
Cycle Q Clear(g_c), s	3.9	0.0	0.0	0.0	22.5	0.0	15.0	8.3	0.0			
Prop In Lane	1.00		0.00	0.00		1.00	1.00		1.00			
Lane Grp Cap(c), veh/h	376	2855	0	0	2579	1154	215	215	192			
V/C Ratio(X)	0.48	0.39	0.00	0.00	0.49	0.00	0.84	0.49	0.00			
Avail Cap(c_a), veh/h	545	2855	0	0	2579	1154	338	337	302			
HCM Platoon Ratio	2.00	2.00	1.00	1.00	1.00	1.00	1.00	1.00	1.00			
Upstream Filter(I)	0.86	0.86	0.00	0.00	1.00	0.00	1.00	1.00	0.00			
Uniform Delay (d), s/veh	6.9	0.0	0.0	0.0	8.6	0.0	64.5	61.6	0.0			
Incr Delay (d2), s/veh	0.8	0.3	0.0	0.0	0.7	0.0	10.5	1.7	0.0			
Initial Q Delay(d3),s/veh	0.0	0.0	0.0	0.0	0.0	0.0	0.0	0.0	0.0			
%ile BackOfQ(50%),veh/ln	1.9	0.1	0.0	0.0	11.1	0.0	8.0	4.2	0.0			
LnGrp Delay(d),s/veh	7.7	0.3	0.0	0.0	9.3	0.0	75.0	63.3	0.0			
LnGrp LOS	A	A			A		E	E				
Approach Vol, veh/h		1298			1261			286				
Approach Delay, s/veh		1.4			9.3			70.7				
Approach LOS		A			A			E				

Timer	1	2	3	4	5	6	7	8
Assigned Phs		2			5	6		8
Phs Duration (G+Y+Rc), s		126.4			11.7	114.7		23.6
Change Period (Y+Rc), s		5.4			5.4	5.4		5.4
Max Green Setting (Gmax), s		110.6			20.6	84.6		28.6
Max Q Clear Time (g_c+I1), s		2.0			5.9	24.5		17.0
Green Ext Time (p_c), s		39.0			0.4	31.5		1.2

Intersection Summary	
HCM 2010 Ctrl Delay	11.8
HCM 2010 LOS	B

Notes

User approved ignoring U-Turning movement.

Movement	EBL	EBT	EBR	WBL	WBT	WBR	NBL	NBT	NBR	SBL	SBT	SBR
Lane Configurations												
Traffic Volume (veh/h)	88	726	276	226	1348	64	219	217	49	65	276	68
Future Volume (veh/h)	88	726	276	226	1348	64	219	217	49	65	276	68
Number	5	2	12	1	6	16	3	8	18	7	4	14
Initial Q (Qb), veh	0	0	0	0	0	0	0	0	0	0	0	0
Ped-Bike Adj(A_pbT)	1.00		1.00	1.00		1.00	1.00		1.00	1.00		1.00
Parking Bus, Adj	1.00	1.00	1.00	1.00	1.00	1.00	1.00	1.00	1.00	1.00	1.00	1.00
Adj Sat Flow, veh/h/ln	1863	1863	1900	1863	1863	1900	1863	1863	1863	1863	1863	1863
Adj Flow Rate, veh/h	105	798	321	235	1390	100	249	271	58	89	310	81
Adj No. of Lanes	1	2	0	1	2	0	1	1	1	1	1	1
Peak Hour Factor	0.84	0.91	0.86	0.96	0.97	0.64	0.88	0.80	0.84	0.73	0.89	0.84
Percent Heavy Veh, %	2	2	2	2	2	2	2	2	2	2	2	2
Cap, veh/h	177	1139	457	298	1678	120	292	497	555	275	348	366
Arrive On Green	0.04	0.46	0.46	0.08	0.50	0.50	0.12	0.27	0.27	0.04	0.19	0.19
Sat Flow, veh/h	1774	2467	991	1774	3350	240	1774	1863	1583	1774	1863	1583
Grp Volume(v), veh/h	105	572	547	235	732	758	249	271	58	89	310	81
Grp Sat Flow(s),veh/h/ln	1774	1770	1688	1774	1770	1820	1774	1863	1583	1774	1863	1583
Q Serve(g_s), s	4.7	38.6	38.7	10.1	52.8	53.4	16.6	18.7	3.7	6.1	24.3	6.2
Cycle Q Clear(g_c), s	4.7	38.6	38.7	10.1	52.8	53.4	16.6	18.7	3.7	6.1	24.3	6.2
Prop In Lane	1.00		0.59	1.00		0.13	1.00		1.00	1.00		1.00
Lane Grp Cap(c), veh/h	177	817	779	298	887	912	292	497	555	275	348	366
V/C Ratio(X)	0.59	0.70	0.70	0.79	0.83	0.83	0.85	0.55	0.10	0.32	0.89	0.22
Avail Cap(c_a), veh/h	210	817	779	399	887	912	292	534	586	275	385	397
HCM Platoon Ratio	1.00	1.00	1.00	1.00	1.00	1.00	1.00	1.00	1.00	1.00	1.00	1.00
Upstream Filter(I)	1.00	1.00	1.00	0.73	0.73	0.73	1.00	1.00	1.00	1.00	1.00	1.00
Uniform Delay (d), s/veh	30.2	32.1	32.1	27.1	31.8	32.0	42.7	47.2	32.9	46.9	59.5	46.7
Incr Delay (d2), s/veh	3.1	5.0	5.2	5.5	6.5	6.5	20.9	1.0	0.1	0.7	20.5	0.3
Initial Q Delay(d3),s/veh	0.0	0.0	0.0	0.0	0.0	0.0	0.0	0.0	0.0	0.0	0.0	0.0
%ile BackOfQ(50%),veh/ln	2.4	19.9	19.2	5.4	27.4	28.4	9.7	9.8	1.6	3.0	14.6	2.8
LnGrp Delay(d),s/veh	33.3	37.1	37.4	32.6	38.3	38.5	63.6	48.2	32.9	47.5	80.0	47.0
LnGrp LOS	C	D	D	C	D	D	E	D	C	D	E	D
Approach Vol, veh/h		1224			1725			578			480	
Approach Delay, s/veh		36.9			37.6			53.3			68.4	
Approach LOS		D			D			D			E	

Timer	1	2	3	4	5	6	7	8
Assigned Phs	1	2	3	4	5	6	7	8
Phs Duration (G+Y+Rc), s	17.9	74.7	24.0	33.5	12.0	80.6	12.0	45.4
Change Period (Y+Rc), s	5.4	5.4	5.4	5.4	5.4	5.4	5.4	5.4
Max Green Setting (Gmax), s	21.0	57.8	18.6	31.0	9.4	69.4	6.6	43.0
Max Q Clear Time (g_c+I1), s	12.1	40.7	18.6	26.3	6.7	55.4	8.1	20.7
Green Ext Time (p_c), s	0.4	13.9	0.0	1.7	0.1	11.7	0.0	4.1

Intersection Summary	
HCM 2010 Ctrl Delay	43.3
HCM 2010 LOS	D

Movement	EBL	EBT	WBT	WBR	SBL	SBR
Lane Configurations						
Traffic Volume (veh/h)	36	808	1627	80	198	65
Future Volume (veh/h)	36	808	1627	80	198	65
Number	5	2	6	16	7	14
Initial Q (Qb), veh	0	0	0	0	0	0
Ped-Bike Adj(A_pbT)	1.00			1.00	1.00	1.00
Parking Bus, Adj	1.00	1.00	1.00	1.00	1.00	1.00
Adj Sat Flow, veh/h/ln	1863	1863	1863	1900	1863	1863
Adj Flow Rate, veh/h	47	878	1643	95	241	88
Adj No. of Lanes	1	2	2	0	1	1
Peak Hour Factor	0.77	0.92	0.99	0.84	0.82	0.74
Percent Heavy Veh, %	2	2	2	2	2	2
Cap, veh/h	204	2747	2641	152	269	241
Arrive On Green	1.00	1.00	0.78	0.78	0.15	0.15
Sat Flow, veh/h	277	3632	3495	196	1774	1583
Grp Volume(v), veh/h	47	878	850	888	241	88
Grp Sat Flow(s),veh/h/ln	277	1770	1770	1828	1774	1583
Q Serve(g_s), s	8.9	0.0	31.0	31.7	20.0	7.5
Cycle Q Clear(g_c), s	40.6	0.0	31.0	31.7	20.0	7.5
Prop In Lane	1.00			0.11	1.00	1.00
Lane Grp Cap(c), veh/h	204	2747	1373	1419	269	241
V/C Ratio(X)	0.23	0.32	0.62	0.63	0.89	0.37
Avail Cap(c_a), veh/h	204	2747	1373	1419	397	355
HCM Platoon Ratio	2.00	2.00	1.00	1.00	1.00	1.00
Upstream Filter(I)	0.64	0.64	0.60	0.60	1.00	1.00
Uniform Delay (d), s/veh	5.5	0.0	7.2	7.3	62.4	57.1
Incr Delay (d2), s/veh	1.7	0.2	0.5	0.5	16.2	0.9
Initial Q Delay(d3),s/veh	0.0	0.0	0.0	0.0	0.0	0.0
%ile BackOfQ(50%),veh/ln	0.8	0.1	15.1	16.0	11.1	3.3
LnGrp Delay(d),s/veh	7.2	0.2	7.7	7.8	78.6	58.0
LnGrp LOS	A	A	A	A	E	E
Approach Vol, veh/h		925	1738		329	
Approach Delay, s/veh		0.6	7.8		73.1	
Approach LOS		A	A		E	

Timer	1	2	3	4	5	6	7	8
Assigned Phs		2		4		6		
Phs Duration (G+Y+Rc), s		121.8		28.2		121.8		
Change Period (Y+Rc), s		5.4		5.4		5.4		
Max Green Setting (Gmax), s		105.6		33.6		105.6		
Max Q Clear Time (g_c+I1), s		42.6		22.0		33.7		
Green Ext Time (p_c), s		39.5		0.8		42.6		

Intersection Summary	
HCM 2010 Ctrl Delay	12.7
HCM 2010 LOS	B

Movement	EBL	EBT	EBR	WBL	WBT	WBR	NBL	NBT	NBR	SBL	SBT	SBR
Lane Configurations												
Traffic Volume (veh/h)	234	594	11	10	1546	37	66	5	9	131	3	363
Future Volume (veh/h)	234	594	11	10	1546	37	66	5	9	131	3	363
Number	5	2	12	1	6	16	3	8	18	7	4	14
Initial Q (Qb), veh	0	0	0	0	0	0	0	0	0	0	0	0
Ped-Bike Adj(A_pbT)	1.00		1.00	1.00		1.00	1.00		1.00	1.00		1.00
Parking Bus, Adj	1.00	1.00	1.00	1.00	1.00	1.00	1.00	1.00	1.00	1.00	1.00	1.00
Adj Sat Flow, veh/h/ln	1863	1863	1900	1863	1863	1900	1900	1863	1863	1900	1863	1863
Adj Flow Rate, veh/h	269	660	16	12	1737	52	108	16	12	152	8	399
Adj No. of Lanes	1	2	0	1	2	0	0	1	1	0	1	1
Peak Hour Factor	0.87	0.90	0.69	0.83	0.89	0.71	0.61	0.31	0.75	0.86	0.38	0.91
Percent Heavy Veh, %	2	2	2	2	2	2	2	2	2	2	2	2
Cap, veh/h	294	2628	64	504	2104	63	303	39	291	307	14	463
Arrive On Green	0.11	0.74	0.74	0.60	0.60	0.60	0.18	0.18	0.18	0.18	0.18	0.18
Sat Flow, veh/h	1774	3532	86	760	3509	105	1404	212	1583	1412	74	1583
Grp Volume(v), veh/h	269	331	345	12	873	916	124	0	12	160	0	399
Grp Sat Flow(s),veh/h/ln	1774	1770	1848	760	1770	1844	1617	0	1583	1486	0	1583
Q Serve(g_s), s	13.7	8.8	8.8	1.0	58.5	59.3	0.0	0.0	0.9	4.8	0.0	27.6
Cycle Q Clear(g_c), s	13.7	8.8	8.8	1.0	58.5	59.3	9.2	0.0	0.9	14.0	0.0	27.6
Prop In Lane	1.00		0.05	1.00		0.06	0.87		1.00	0.95		1.00
Lane Grp Cap(c), veh/h	294	1317	1375	504	1061	1106	342	0	291	320	0	463
V/C Ratio(X)	0.91	0.25	0.25	0.02	0.82	0.83	0.36	0.00	0.04	0.50	0.00	0.86
Avail Cap(c_a), veh/h	393	1317	1375	504	1061	1106	342	0	291	320	0	463
HCM Platoon Ratio	1.00	1.00	1.00	1.00	1.00	1.00	1.00	1.00	1.00	1.00	1.00	1.00
Upstream Filter(I)	0.96	0.96	0.96	1.00	1.00	1.00	1.00	0.00	1.00	1.00	0.00	1.00
Uniform Delay (d), s/veh	44.2	6.0	6.0	12.2	23.7	23.9	53.7	0.0	50.3	55.4	0.0	50.2
Incr Delay (d2), s/veh	20.7	0.4	0.4	0.1	7.2	7.2	0.6	0.0	0.1	1.2	0.0	15.3
Initial Q Delay(d3),s/veh	0.0	0.0	0.0	0.0	0.0	0.0	0.0	0.0	0.0	0.0	0.0	0.0
%ile BackOfQ(50%),veh/ln	12.7	4.4	4.6	0.2	30.5	32.2	4.6	0.0	0.4	6.2	0.0	17.6
LnGrp Delay(d),s/veh	64.9	6.5	6.5	12.3	30.9	31.1	54.3	0.0	50.4	56.6	0.0	65.5
LnGrp LOS	E	A	A	B	C	C	D		D	E		E
Approach Vol, veh/h		945			1801			136			559	
Approach Delay, s/veh		23.1			30.9			54.0			63.0	
Approach LOS		C			C			D			E	

Timer	1	2	3	4	5	6	7	8
Assigned Phs		2		4	5	6		8
Phs Duration (G+Y+Rc), s		117.0		33.0	21.6	95.4		33.0
Change Period (Y+Rc), s		5.4		5.4	5.4	5.4		5.4
Max Green Setting (Gmax), s		111.6		27.6	24.6	81.6		27.6
Max Q Clear Time (g_c+I1), s		10.8		29.6	15.7	61.3		11.2
Green Ext Time (p_c), s		39.3		0.0	0.5	15.7		2.9

Intersection Summary	
HCM 2010 Ctrl Delay	34.9
HCM 2010 LOS	C

Movement	EBL	EBT	EBR	WBL	WBT	WBR	NBL	NBT	NBR	SBL	SBT	SBR
Lane Configurations												
Traffic Volume (veh/h)	339	166	269	261	309	29	305	1367	83	75	2713	424
Future Volume (veh/h)	339	166	269	261	309	29	305	1367	83	75	2713	424
Number	5	2	12	1	6	16	3	8	18	7	4	14
Initial Q (Qb), veh	0	0	0	0	0	0	0	0	0	0	0	0
Ped-Bike Adj(A_pbT)	1.00		1.00	1.00		1.00	1.00		1.00	1.00		1.00
Parking Bus, Adj	1.00	1.00	1.00	1.00	1.00	1.00	1.00	1.00	1.00	1.00	1.00	1.00
Adj Sat Flow, veh/h/ln	1863	1863	1863	1863	1863	1900	1863	1863	1900	1863	1863	1863
Adj Flow Rate, veh/h	381	195	0	230	450	41	339	1424	104	101	2981	511
Adj No. of Lanes	2	1	1	1	2	0	2	3	0	1	3	1
Peak Hour Factor	0.89	0.85	0.86	0.85	0.90	0.70	0.90	0.96	0.80	0.74	0.91	0.83
Percent Heavy Veh, %	2	2	2	2	2	2	2	2	2	2	2	2
Cap, veh/h	464	243	207	220	417	38	312	2696	197	209	2597	809
Arrive On Green	0.13	0.13	0.00	0.12	0.12	0.12	0.09	0.56	0.56	0.04	0.51	0.51
Sat Flow, veh/h	3548	1863	1583	1774	3366	305	3442	4837	353	1774	5085	1583
Grp Volume(v), veh/h	381	195	0	230	248	243	339	998	530	101	2981	511
Grp Sat Flow(s),veh/h/ln	1774	1863	1583	1774	1863	1809	1721	1695	1800	1774	1695	1583
Q Serve(g_s), s	15.7	15.2	0.0	18.6	18.6	18.6	13.6	27.7	27.7	4.6	76.6	35.0
Cycle Q Clear(g_c), s	15.7	15.2	0.0	18.6	18.6	18.6	13.6	27.7	27.7	4.6	76.6	35.0
Prop In Lane	1.00		1.00	1.00		0.17	1.00		0.20	1.00		1.00
Lane Grp Cap(c), veh/h	464	243	207	220	231	224	312	1890	1003	209	2597	809
V/C Ratio(X)	0.82	0.80	0.00	1.05	1.07	1.08	1.09	0.53	0.53	0.48	1.15	0.63
Avail Cap(c_a), veh/h	464	243	207	220	231	224	312	1890	1003	250	2597	809
HCM Platoon Ratio	1.00	1.00	1.00	1.00	1.00	1.00	1.00	1.00	1.00	1.00	1.00	1.00
Upstream Filter(I)	1.00	1.00	0.00	1.00	1.00	1.00	1.00	1.00	1.00	1.00	1.00	1.00
Uniform Delay (d), s/veh	63.5	63.3	0.0	65.7	65.7	65.7	68.2	20.8	20.8	25.0	36.7	26.5
Incr Delay (d2), s/veh	15.1	23.6	0.0	73.1	80.5	83.7	76.0	0.3	0.5	1.7	71.6	1.6
Initial Q Delay(d3),s/veh	0.0	0.0	0.0	0.0	0.0	0.0	0.0	0.0	0.0	0.0	0.0	0.0
%ile BackOfQ(50%),veh/ln	8.6	9.4	0.0	13.6	14.7	14.5	9.8	13.0	13.8	2.4	52.8	15.5
LnGrp Delay(d),s/veh	78.6	86.9	0.0	138.8	146.2	149.4	144.2	21.1	21.3	26.8	108.3	28.1
LnGrp LOS	E	F		F	F	F	F	C	C	C	F	C
Approach Vol, veh/h		576			721			1867			3593	
Approach Delay, s/veh		81.4			144.9			43.5			94.6	
Approach LOS		F			F			D			F	

Timer	1	2	3	4	5	6	7	8
Assigned Phs		2	3	4		6	7	8
Phs Duration (G+Y+Rc), s		25.0	19.0	82.0		24.0	12.0	89.0
Change Period (Y+Rc), s		5.4	5.4	5.4		5.4	5.4	5.4
Max Green Setting (Gmax), s		19.6	13.6	76.6		18.6	10.0	80.2
Max Q Clear Time (g_c+I1), s		17.7	15.6	78.6		20.6	6.6	29.7
Green Ext Time (p_c), s		0.5	0.0	0.0		0.0	0.1	19.3

Intersection Summary	
HCM 2010 Ctrl Delay	84.7
HCM 2010 LOS	F

Notes

User approved volume balancing among the lanes for turning movement.

Movement	EBL	EBT	EBR	WBL	WBT	WBR	NBL	NBT	NBR	SBL	SBT	SBR
Lane Configurations												
Traffic Volume (veh/h)	34	150	125	81	189	331	94	461	76	380	792	31
Future Volume (veh/h)	34	150	125	81	189	331	94	461	76	380	792	31
Number	5	2	12	1	6	16	3	8	18	7	4	14
Initial Q (Qb), veh	0	0	0	0	0	0	0	0	0	0	0	0
Ped-Bike Adj(A_pbT)	1.00		1.00	1.00		1.00	1.00		1.00	1.00		1.00
Parking Bus, Adj	1.00	1.00	1.00	1.00	1.00	1.00	1.00	1.00	1.00	1.00	1.00	1.00
Adj Sat Flow, veh/h/ln	1863	1863	1900	1863	1863	1863	1863	1863	1900	1863	1863	1900
Adj Flow Rate, veh/h	40	169	152	116	210	380	118	562	100	409	870	35
Adj No. of Lanes	1	1	0	1	1	1	1	2	0	1	2	0
Peak Hour Factor	0.86	0.89	0.82	0.70	0.90	0.87	0.80	0.82	0.76	0.93	0.91	0.88
Percent Heavy Veh, %	2	2	2	2	2	2	2	2	2	2	2	2
Cap, veh/h	296	215	194	270	496	422	303	709	126	481	1256	51
Arrive On Green	0.04	0.24	0.24	0.07	0.27	0.27	0.07	0.24	0.24	0.20	0.36	0.36
Sat Flow, veh/h	1774	905	814	1774	1863	1583	1774	3005	533	1774	3468	140
Grp Volume(v), veh/h	40	0	321	116	210	380	118	330	332	409	444	461
Grp Sat Flow(s),veh/h/ln	1774	0	1719	1774	1863	1583	1774	1770	1769	1774	1770	1838
Q Serve(g_s), s	1.4	0.0	14.2	4.0	7.6	18.9	4.0	14.3	14.4	13.3	17.4	17.4
Cycle Q Clear(g_c), s	1.4	0.0	14.2	4.0	7.6	18.9	4.0	14.3	14.4	13.3	17.4	17.4
Prop In Lane	1.00		0.47	1.00		1.00	1.00		0.30	1.00		0.08
Lane Grp Cap(c), veh/h	296	0	409	270	496	422	303	417	417	481	641	666
V/C Ratio(X)	0.14	0.00	0.78	0.43	0.42	0.90	0.39	0.79	0.80	0.85	0.69	0.69
Avail Cap(c_a), veh/h	340	0	471	270	517	440	337	437	437	585	730	759
HCM Platoon Ratio	1.00	1.00	1.00	1.00	1.00	1.00	1.00	1.00	1.00	1.00	1.00	1.00
Upstream Filter(I)	1.00	0.00	1.00	1.00	1.00	1.00	1.00	1.00	1.00	1.00	1.00	1.00
Uniform Delay (d), s/veh	22.1	0.0	29.1	22.6	24.7	28.8	21.4	29.2	29.3	18.1	22.1	22.1
Incr Delay (d2), s/veh	0.2	0.0	7.5	1.1	0.6	20.8	0.8	9.2	9.5	9.7	2.4	2.3
Initial Q Delay(d3),s/veh	0.0	0.0	0.0	0.0	0.0	0.0	0.0	0.0	0.0	0.0	0.0	0.0
%ile BackOfQ(50%),veh/ln	0.7	0.0	7.6	2.0	4.0	10.6	2.0	8.0	8.1	7.7	8.9	9.3
LnGrp Delay(d),s/veh	22.3	0.0	36.5	23.6	25.3	49.6	22.3	38.4	38.8	27.9	24.5	24.4
LnGrp LOS	C		D	C	C	D	C	D	D	C	C	C
Approach Vol, veh/h		361			706			780			1314	
Approach Delay, s/veh		34.9			38.1			36.1			25.5	
Approach LOS		C			D			D			C	

Timer	1	2	3	4	5	6	7	8
Assigned Phs	1	2	3	4	5	6	7	8
Phs Duration (G+Y+Rc), s	10.7	24.8	11.0	34.9	8.4	27.1	21.3	24.6
Change Period (Y+Rc), s	5.4	5.4	5.4	5.4	5.4	5.4	5.4	5.4
Max Green Setting (Gmax), s	5.3	22.3	7.2	33.6	5.0	22.6	20.7	20.1
Max Q Clear Time (g_c+I1), s	6.0	16.2	6.0	19.4	3.4	20.9	15.3	16.4
Green Ext Time (p_c), s	0.0	2.4	0.0	8.4	0.0	0.8	0.7	2.8

Intersection Summary	
HCM 2010 Ctrl Delay	32.0
HCM 2010 LOS	C

Movement	EBL	EBT	EBR	WBL	WBT	WBR	NBL	NBT	NBR	SBL	SBT	SBR
Lane Configurations												
Traffic Volume (veh/h)	222	564	111	547	1098	569	156	904	290	501	1931	207
Future Volume (veh/h)	222	564	111	547	1098	569	156	904	290	501	1931	207
Number	5	2	12	1	6	16	3	8	18	7	4	14
Initial Q (Qb), veh	0	0	0	0	0	0	0	0	0	0	0	0
Ped-Bike Adj(A_pbT)	1.00		1.00	1.00		1.00	1.00		1.00	1.00		1.00
Parking Bus, Adj	1.00	1.00	1.00	1.00	1.00	1.00	1.00	1.00	1.00	1.00	1.00	1.00
Adj Sat Flow, veh/h/ln	1863	1863	1900	1863	1863	1863	1863	1863	1863	1863	1863	1900
Adj Flow Rate, veh/h	274	600	123	615	1234	632	214	993	372	516	2194	244
Adj No. of Lanes	2	2	0	2	2	1	2	2	1	2	3	0
Peak Hour Factor	0.81	0.94	0.90	0.89	0.89	0.90	0.73	0.91	0.78	0.97	0.88	0.85
Percent Heavy Veh, %	2	2	2	2	2	2	2	2	2	2	2	2
Cap, veh/h	243	652	133	592	1147	764	197	1071	752	546	1880	206
Arrive On Green	0.14	0.45	0.45	0.17	0.32	0.32	0.06	0.30	0.30	0.16	0.40	0.40
Sat Flow, veh/h	3442	2928	599	3442	3539	1583	3442	3539	1583	3442	4654	509
Grp Volume(v), veh/h	274	362	361	615	1234	632	214	993	372	516	1589	849
Grp Sat Flow(s),veh/h/ln	1721	1770	1757	1721	1770	1583	1721	1770	1583	1721	1695	1773
Q Serve(g_s), s	10.6	28.8	29.0	25.8	48.6	33.7	8.6	40.8	9.0	22.3	60.6	60.6
Cycle Q Clear(g_c), s	10.6	28.8	29.0	25.8	48.6	33.7	8.6	40.8	9.0	22.3	60.6	60.6
Prop In Lane	1.00		0.34	1.00		1.00	1.00		1.00	1.00		0.29
Lane Grp Cap(c), veh/h	243	394	391	592	1147	764	197	1071	752	546	1370	716
V/C Ratio(X)	1.13	0.92	0.92	1.04	1.08	0.83	1.08	0.93	0.49	0.94	1.16	1.19
Avail Cap(c_a), veh/h	243	394	391	592	1147	764	197	1071	752	546	1370	716
HCM Platoon Ratio	2.00	2.00	2.00	1.00	1.00	1.00	1.00	1.00	1.00	1.00	1.00	1.00
Upstream Filter(I)	0.95	0.95	0.95	1.00	1.00	1.00	1.00	1.00	1.00	1.00	1.00	1.00
Uniform Delay (d), s/veh	64.4	40.3	40.4	62.1	50.7	15.7	70.7	50.7	10.3	62.5	44.7	44.7
Incr Delay (d2), s/veh	94.5	27.8	28.5	47.5	49.6	7.5	88.4	13.4	0.5	25.5	80.5	97.3
Initial Q Delay(d3),s/veh	0.0	0.0	0.0	0.0	0.0	0.0	0.0	0.0	0.0	0.0	0.0	0.0
%ile BackOfQ(50%),veh/ln	8.2	16.9	16.9	16.2	31.6	16.3	6.5	22.0	5.2	12.5	43.7	49.0
LnGrp Delay(d),s/veh	158.9	68.2	68.9	109.6	100.3	23.2	159.1	64.1	10.8	87.9	125.2	142.0
LnGrp LOS	F	E	E	F	F	C	F	E	B	F	F	F
Approach Vol, veh/h		997			2481			1579			2954	
Approach Delay, s/veh		93.4			83.0			64.4			123.5	
Approach LOS		F			F			E			F	

Timer	1	2	3	4	5	6	7	8
Assigned Phs	1	2	3	4	5	6	7	8
Phs Duration (G+Y+Rc), s	31.2	38.8	14.0	66.0	16.0	54.0	29.2	50.8
Change Period (Y+Rc), s	5.4	5.4	5.4	5.4	5.4	5.4	5.4	5.4
Max Green Setting (Gmax), s	25.8	33.4	8.6	60.6	10.6	48.6	23.8	45.4
Max Q Clear Time (g_c+I1), s	27.8	31.0	10.6	62.6	12.6	50.6	24.3	42.8
Green Ext Time (p_c), s	0.0	1.0	0.0	0.0	0.0	0.0	0.0	2.6

Intersection Summary	
HCM 2010 Ctrl Delay	95.6
HCM 2010 LOS	F

Movement	EBL	EBT	EBR	WBL	WBT	WBR	NBL	NBT	NBR	SBL	SBT	SBR
Lane Configurations												
Traffic Volume (veh/h)	110	1270	30	30	2250	110	20	10	20	270	20	30
Future Volume (veh/h)	110	1270	30	30	2250	110	20	10	20	270	20	30
Number	5	2	12	1	6	16	3	8	18	7	4	14
Initial Q (Qb), veh	0	0	0	0	0	0	0	0	0	0	0	0
Ped-Bike Adj(A_pbT)	1.00		1.00	1.00		1.00	1.00		1.00	1.00		1.00
Parking Bus, Adj	1.00	1.00	1.00	1.00	1.00	1.00	1.00	1.00	1.00	1.00	1.00	1.00
Adj Sat Flow, veh/h/ln	1863	1863	1900	1863	1863	1900	1900	1863	1900	1863	1863	1863
Adj Flow Rate, veh/h	120	1380	33	33	2446	120	22	11	22	309	0	33
Adj No. of Lanes	1	3	0	1	3	0	0	1	0	2	0	1
Peak Hour Factor	0.92	0.92	0.92	0.92	0.92	0.92	0.92	0.92	0.92	0.92	0.92	0.92
Percent Heavy Veh, %	2	2	2	2	2	2	2	2	2	2	2	2
Cap, veh/h	153	3512	84	266	3368	164	28	14	28	366	0	163
Arrive On Green	0.01	0.23	0.23	0.02	0.68	0.68	0.04	0.04	0.04	0.10	0.00	0.10
Sat Flow, veh/h	1774	5109	122	1774	4969	242	683	342	683	3548	0	1583
Grp Volume(v), veh/h	120	916	497	33	1662	904	55	0	0	309	0	33
Grp Sat Flow(s),veh/h/ln	1774	1695	1841	1774	1695	1820	1708	0	0	1774	0	1583
Q Serve(g_s), s	3.1	34.4	34.4	0.8	46.5	47.7	4.8	0.0	0.0	12.8	0.0	2.9
Cycle Q Clear(g_c), s	3.1	34.4	34.4	0.8	46.5	47.7	4.8	0.0	0.0	12.8	0.0	2.9
Prop In Lane	1.00		0.07	1.00		0.13	0.40		0.40	1.00		1.00
Lane Grp Cap(c), veh/h	153	2330	1266	266	2298	1234	70	0	0	366	0	163
V/C Ratio(X)	0.78	0.39	0.39	0.12	0.72	0.73	0.79	0.00	0.00	0.85	0.00	0.20
Avail Cap(c_a), veh/h	241	2330	1266	283	2298	1234	87	0	0	487	0	217
HCM Platoon Ratio	0.33	0.33	0.33	1.00	1.00	1.00	1.00	1.00	1.00	1.00	1.00	1.00
Upstream Filter(I)	0.94	0.94	0.94	0.79	0.79	0.79	1.00	0.00	0.00	1.00	0.00	1.00
Uniform Delay (d), s/veh	32.2	31.4	31.4	10.7	15.3	15.5	71.3	0.0	0.0	66.1	0.0	61.6
Incr Delay (d2), s/veh	8.0	0.5	0.9	0.2	1.6	3.1	31.4	0.0	0.0	10.0	0.0	0.6
Initial Q Delay(d3),s/veh	0.0	0.0	0.0	0.0	0.0	0.0	0.0	0.0	0.0	0.0	0.0	0.0
%ile BackOfQ(50%),veh/ln	3.8	16.3	17.9	0.4	22.0	24.9	2.9	0.0	0.0	6.8	0.0	1.3
LnGrp Delay(d),s/veh	40.2	31.9	32.3	10.9	16.9	18.6	102.7	0.0	0.0	76.1	0.0	62.2
LnGrp LOS	D	C	C	B	B	B	F			E		E
Approach Vol, veh/h		1533			2599			55			342	
Approach Delay, s/veh		32.7			17.4			102.7			74.8	
Approach LOS		C			B			F			E	

Timer	1	2	3	4	5	6	7	8
Assigned Phs	1	2		4	5	6		8
Phs Duration (G+Y+Rc), s	9.1	108.5		20.9	10.6	107.1		11.5
Change Period (Y+Rc), s	5.4	5.4		5.4	5.4	5.4		5.4
Max Green Setting (Gmax), s	5.2	95.0		20.6	12.6	87.6		7.6
Max Q Clear Time (g_c+I1), s	2.8	36.4		14.8	5.1	49.7		6.8
Green Ext Time (p_c), s	0.0	53.2		0.6	0.1	35.5		0.0

Intersection Summary	
HCM 2010 Ctrl Delay	27.9
HCM 2010 LOS	C

Notes

User approved volume balancing among the lanes for turning movement.

Movement	EBL	EBT	EBR	WBL	WBT	WBR	NBL	NBT	NBR	SBL	SBT	SBR
Lane Configurations												
Traffic Volume (veh/h)	643	779	322	195	1395	23	219	510	119	91	691	1176
Future Volume (veh/h)	643	779	322	195	1395	23	219	510	119	91	691	1176
Number	5	2	12	1	6	16	3	8	18	7	4	14
Initial Q (Qb), veh	0	0	0	0	0	0	0	0	0	0	0	0
Ped-Bike Adj(A_pbT)	1.00		1.00	1.00		1.00	1.00		1.00	1.00		1.00
Parking Bus, Adj	1.00	1.00	1.00	1.00	1.00	1.00	1.00	1.00	1.00	1.00	1.00	1.00
Adj Sat Flow, veh/h/ln	1863	1863	1900	1863	1863	1863	1863	1863	1863	1863	1863	1863
Adj Flow Rate, veh/h	722	906	383	212	1468	0	243	567	153	105	743	0
Adj No. of Lanes	2	2	0	1	2	1	1	2	1	1	2	1
Peak Hour Factor	0.89	0.86	0.84	0.92	0.95	0.69	0.90	0.90	0.78	0.87	0.93	0.86
Percent Heavy Veh, %	2	2	2	2	2	2	2	2	2	2	2	2
Cap, veh/h	754	1104	463	218	1170	524	185	686	459	267	852	362
Arrive On Green	0.37	0.76	0.76	0.10	0.33	0.00	0.08	0.19	0.19	0.11	0.23	0.00
Sat Flow, veh/h	3442	2432	1020	1774	3539	1583	1774	3539	1583	1774	3725	1583
Grp Volume(v), veh/h	722	657	632	212	1468	0	243	567	153	105	743	0
Grp Sat Flow(s),veh/h/ln	1721	1770	1683	1774	1770	1583	1774	1770	1583	1774	1863	1583
Q Serve(g_s), s	30.7	35.5	36.5	14.1	49.6	0.0	11.6	23.1	7.9	2.3	28.8	0.0
Cycle Q Clear(g_c), s	30.7	35.5	36.5	14.1	49.6	0.0	11.6	23.1	7.9	2.3	28.8	0.0
Prop In Lane	1.00		0.61	1.00		1.00	1.00		1.00	1.00		1.00
Lane Grp Cap(c), veh/h	754	803	764	218	1170	524	185	686	459	267	852	362
V/C Ratio(X)	0.96	0.82	0.83	0.97	1.25	0.00	1.31	0.83	0.33	0.39	0.87	0.00
Avail Cap(c_a), veh/h	754	803	764	218	1170	524	185	1064	628	267	1058	450
HCM Platoon Ratio	1.67	1.67	1.67	1.00	1.00	1.00	1.00	1.00	1.00	1.00	1.00	1.00
Upstream Filter(I)	0.89	0.89	0.89	0.79	0.79	0.00	1.00	1.00	1.00	1.00	1.00	0.00
Uniform Delay (d), s/veh	46.9	14.2	14.3	44.2	50.2	0.0	60.3	58.1	21.8	59.0	55.7	0.0
Incr Delay (d2), s/veh	21.1	8.2	9.0	45.9	120.2	0.0	173.5	3.2	0.4	0.9	6.8	0.0
Initial Q Delay(d3),s/veh	0.0	0.0	0.0	0.0	0.0	0.0	0.0	0.0	0.0	0.0	0.0	0.0
%ile BackOfQ(50%),veh/ln	16.7	18.5	18.2	9.7	43.7	0.0	10.9	11.6	3.5	4.0	15.7	0.0
LnGrp Delay(d),s/veh	68.0	22.4	23.3	90.1	170.4	0.0	233.8	61.3	22.2	59.9	62.6	0.0
LnGrp LOS	E	C	C	F	F		F	E	C	E	E	
Approach Vol, veh/h		2011			1680			963			848	
Approach Delay, s/veh		39.1			160.2			98.6			62.2	
Approach LOS		D			F			F			E	

Timer	1	2	3	4	5	6	7	8
Assigned Phs	1	2	3	4	5	6	7	8
Phs Duration (G+Y+Rc), s	19.8	73.5	17.0	39.7	38.3	55.0	22.3	34.5
Change Period (Y+Rc), s	5.4	5.4	5.4	5.4	5.4	5.4	5.4	5.4
Max Green Setting (Gmax), s	14.4	59.8	11.6	42.6	24.6	49.6	9.1	45.1
Max Q Clear Time (g_c+I1), s	16.1	38.5	13.6	30.8	32.7	51.6	4.3	25.1
Green Ext Time (p_c), s	0.0	12.1	0.0	3.5	0.0	0.0	2.1	4.0

Intersection Summary	
HCM 2010 Ctrl Delay	90.1
HCM 2010 LOS	F

Notes

User approved volume balancing among the lanes for turning movement.

Movement	EBL	EBT	EBR	WBL	WBT	WBR	NBL	NBT	NBR	SBL	SBT	SBR
Lane Configurations												
Traffic Volume (veh/h)	0	803	176	188	1214	0	0	0	0	379	21	309
Future Volume (veh/h)	0	803	176	188	1214	0	0	0	0	379	21	309
Number	5	2	12	1	6	16				7	4	14
Initial Q (Qb), veh	0	0	0	0	0	0				0	0	0
Ped-Bike Adj(A_pbT)	1.00		1.00	1.00		1.00				1.00		1.00
Parking Bus, Adj	1.00	1.00	1.00	1.00	1.00	1.00				1.00	1.00	1.00
Adj Sat Flow, veh/h/ln	0	1863	1863	1863	1863	0				1863	1863	1863
Adj Flow Rate, veh/h	0	956	0	235	1278	0				443	0	0
Adj No. of Lanes	0	2	1	1	2	0				2	0	1
Peak Hour Factor	1.00	0.84	0.92	0.80	0.95	1.00				0.91	0.56	0.90
Percent Heavy Veh, %	0	2	2	2	2	0				2	2	2
Cap, veh/h	0	2449	1096	415	2768	0				518	0	231
Arrive On Green	0.00	0.23	0.00	0.05	0.78	0.00				0.15	0.00	0.00
Sat Flow, veh/h	0	3632	1583	1774	3632	0				3548	0	1583
Grp Volume(v), veh/h	0	956	0	235	1278	0				443	0	0
Grp Sat Flow(s),veh/h/ln	0	1770	1583	1774	1770	0				1774	0	1583
Q Serve(g_s), s	0.0	34.3	0.0	5.5	18.5	0.0				18.3	0.0	0.0
Cycle Q Clear(g_c), s	0.0	34.3	0.0	5.5	18.5	0.0				18.3	0.0	0.0
Prop In Lane	0.00		1.00	1.00		0.00				1.00		1.00
Lane Grp Cap(c), veh/h	0	2449	1096	415	2768	0				518	0	231
V/C Ratio(X)	0.00	0.39	0.00	0.57	0.46	0.00				0.86	0.00	0.00
Avail Cap(c_a), veh/h	0	2449	1096	610	2768	0				1126	0	502
HCM Platoon Ratio	1.00	0.33	0.33	1.00	1.00	1.00				1.00	1.00	1.00
Upstream Filter(I)	0.00	0.45	0.00	0.85	0.85	0.00				1.00	0.00	0.00
Uniform Delay (d), s/veh	0.0	31.1	0.0	12.4	5.6	0.0				62.5	0.0	0.0
Incr Delay (d2), s/veh	0.0	0.2	0.0	1.0	0.5	0.0				4.2	0.0	0.0
Initial Q Delay(d3),s/veh	0.0	0.0	0.0	0.0	0.0	0.0				0.0	0.0	0.0
%ile BackOfQ(50%),veh/ln	0.0	16.9	0.0	4.0	9.1	0.0				9.3	0.0	0.0
LnGrp Delay(d),s/veh	0.0	31.3	0.0	13.4	6.1	0.0				66.7	0.0	0.0
LnGrp LOS		C		B	A					E		
Approach Vol, veh/h		956			1513						443	
Approach Delay, s/veh		31.3			7.2						66.7	
Approach LOS		C			A						E	

Timer	1	2	3	4	5	6	7	8
Assigned Phs	1	2		4		6		
Phs Duration (G+Y+Rc), s	13.5	109.2		27.3		122.7		
Change Period (Y+Rc), s	5.4	5.4		5.4		5.4		
Max Green Setting (Gmax), s	24.6	61.6		47.6		91.6		
Max Q Clear Time (g_c+I1), s	7.5	36.3		20.3		20.5		
Green Ext Time (p_c), s	0.6	17.6		1.6		31.1		

Intersection Summary	
HCM 2010 Ctrl Delay	24.1
HCM 2010 LOS	C

Notes

User approved volume balancing among the lanes for turning movement.

Movement	EBL	EBT	EBR	WBL	WBT	WBR	NBL	NBT	NBR	SBL	SBT	SBR
Lane Configurations												
Traffic Volume (veh/h)	157	995	0	0	1198	423	156	89	181	0	0	0
Future Volume (veh/h)	157	995	0	0	1198	423	156	89	181	0	0	0
Number	5	2	12	1	6	16	3	8	18			
Initial Q (Qb), veh	0	0	0	0	0	0	0	0	0			
Ped-Bike Adj(A_pbT)	1.00		1.00	1.00		1.00	1.00		1.00			
Parking Bus, Adj	1.00	1.00	1.00	1.00	1.00	1.00	1.00	1.00	1.00			
Adj Sat Flow, veh/h/ln	1863	1863	0	0	1863	1863	1900	1863	1863			
Adj Flow Rate, veh/h	180	1118	0	0	1261	0	181	105	0			
Adj No. of Lanes	1	2	0	0	2	1	0	2	1			
Peak Hour Factor	0.87	0.89	1.00	1.00	0.95	0.91	0.86	0.85	0.84			
Percent Heavy Veh, %	2	2	0	0	2	2	2	2	2			
Cap, veh/h	376	2855	0	0	2579	1154	215	215	192			
Arrive On Green	0.08	1.00	0.00	0.00	0.73	0.00	0.12	0.12	0.00			
Sat Flow, veh/h	1774	3632	0	0	3632	1583	1774	1770	1583			
Grp Volume(v), veh/h	180	1118	0	0	1261	0	181	105	0			
Grp Sat Flow(s),veh/h/ln	1774	1770	0	0	1770	1583	1774	1770	1583			
Q Serve(g_s), s	3.9	0.0	0.0	0.0	22.5	0.0	15.0	8.3	0.0			
Cycle Q Clear(g_c), s	3.9	0.0	0.0	0.0	22.5	0.0	15.0	8.3	0.0			
Prop In Lane	1.00		0.00	0.00		1.00	1.00		1.00			
Lane Grp Cap(c), veh/h	376	2855	0	0	2579	1154	215	215	192			
V/C Ratio(X)	0.48	0.39	0.00	0.00	0.49	0.00	0.84	0.49	0.00			
Avail Cap(c_a), veh/h	545	2855	0	0	2579	1154	338	337	302			
HCM Platoon Ratio	2.00	2.00	1.00	1.00	1.00	1.00	1.00	1.00	1.00			
Upstream Filter(I)	0.86	0.86	0.00	0.00	1.00	0.00	1.00	1.00	0.00			
Uniform Delay (d), s/veh	6.9	0.0	0.0	0.0	8.6	0.0	64.5	61.6	0.0			
Incr Delay (d2), s/veh	0.8	0.3	0.0	0.0	0.7	0.0	10.5	1.7	0.0			
Initial Q Delay(d3),s/veh	0.0	0.0	0.0	0.0	0.0	0.0	0.0	0.0	0.0			
%ile BackOfQ(50%),veh/ln	1.9	0.1	0.0	0.0	11.1	0.0	8.0	4.2	0.0			
LnGrp Delay(d),s/veh	7.7	0.3	0.0	0.0	9.3	0.0	75.0	63.3	0.0			
LnGrp LOS	A	A			A		E	E				
Approach Vol, veh/h		1298			1261			286				
Approach Delay, s/veh		1.4			9.3			70.7				
Approach LOS		A			A			E				

Timer	1	2	3	4	5	6	7	8
Assigned Phs		2			5	6		8
Phs Duration (G+Y+Rc), s		126.4			11.7	114.7		23.6
Change Period (Y+Rc), s		5.4			5.4	5.4		5.4
Max Green Setting (Gmax), s		110.6			20.6	84.6		28.6
Max Q Clear Time (g_c+I1), s		2.0			5.9	24.5		17.0
Green Ext Time (p_c), s		39.0			0.4	31.5		1.2

Intersection Summary	
HCM 2010 Ctrl Delay	11.8
HCM 2010 LOS	B

Notes

User approved ignoring U-Turning movement.

Movement	EBL	EBT	EBR	WBL	WBT	WBR	NBL	NBT	NBR	SBL	SBT	SBR
Lane Configurations												
Traffic Volume (veh/h)	88	726	276	226	1348	64	219	217	49	65	276	68
Future Volume (veh/h)	88	726	276	226	1348	64	219	217	49	65	276	68
Number	5	2	12	1	6	16	3	8	18	7	4	14
Initial Q (Qb), veh	0	0	0	0	0	0	0	0	0	0	0	0
Ped-Bike Adj(A_pbT)	1.00		1.00	1.00		1.00	1.00		1.00	1.00		1.00
Parking Bus, Adj	1.00	1.00	1.00	1.00	1.00	1.00	1.00	1.00	1.00	1.00	1.00	1.00
Adj Sat Flow, veh/h/ln	1863	1863	1900	1863	1863	1900	1863	1863	1863	1863	1863	1863
Adj Flow Rate, veh/h	105	798	321	235	1390	100	249	271	58	89	310	81
Adj No. of Lanes	1	2	0	1	2	0	1	1	1	1	1	1
Peak Hour Factor	0.84	0.91	0.86	0.96	0.97	0.64	0.88	0.80	0.84	0.73	0.89	0.84
Percent Heavy Veh, %	2	2	2	2	2	2	2	2	2	2	2	2
Cap, veh/h	177	1139	457	298	1678	120	292	497	555	275	348	366
Arrive On Green	0.04	0.46	0.46	0.08	0.50	0.50	0.12	0.27	0.27	0.04	0.19	0.19
Sat Flow, veh/h	1774	2467	991	1774	3350	240	1774	1863	1583	1774	1863	1583
Grp Volume(v), veh/h	105	572	547	235	732	758	249	271	58	89	310	81
Grp Sat Flow(s),veh/h/ln	1774	1770	1688	1774	1770	1820	1774	1863	1583	1774	1863	1583
Q Serve(g_s), s	4.7	38.6	38.7	10.1	52.8	53.4	16.6	18.7	3.7	6.1	24.3	6.2
Cycle Q Clear(g_c), s	4.7	38.6	38.7	10.1	52.8	53.4	16.6	18.7	3.7	6.1	24.3	6.2
Prop In Lane	1.00		0.59	1.00		0.13	1.00		1.00	1.00		1.00
Lane Grp Cap(c), veh/h	177	817	779	298	887	912	292	497	555	275	348	366
V/C Ratio(X)	0.59	0.70	0.70	0.79	0.83	0.83	0.85	0.55	0.10	0.32	0.89	0.22
Avail Cap(c_a), veh/h	210	817	779	399	887	912	292	534	586	275	385	397
HCM Platoon Ratio	1.00	1.00	1.00	1.00	1.00	1.00	1.00	1.00	1.00	1.00	1.00	1.00
Upstream Filter(I)	1.00	1.00	1.00	0.73	0.73	0.73	1.00	1.00	1.00	1.00	1.00	1.00
Uniform Delay (d), s/veh	30.2	32.1	32.1	27.1	31.8	32.0	42.7	47.2	32.9	46.9	59.5	46.7
Incr Delay (d2), s/veh	3.1	5.0	5.2	5.5	6.5	6.5	20.9	1.0	0.1	0.7	20.5	0.3
Initial Q Delay(d3),s/veh	0.0	0.0	0.0	0.0	0.0	0.0	0.0	0.0	0.0	0.0	0.0	0.0
%ile BackOfQ(50%),veh/ln	2.4	19.9	19.2	5.4	27.4	28.4	9.7	9.8	1.6	3.0	14.6	2.8
LnGrp Delay(d),s/veh	33.3	37.1	37.4	32.6	38.3	38.5	63.6	48.2	32.9	47.5	80.0	47.0
LnGrp LOS	C	D	D	C	D	D	E	D	C	D	E	D
Approach Vol, veh/h		1224			1725			578			480	
Approach Delay, s/veh		36.9			37.6			53.3			68.4	
Approach LOS		D			D			D			E	

Timer	1	2	3	4	5	6	7	8
Assigned Phs	1	2	3	4	5	6	7	8
Phs Duration (G+Y+Rc), s	17.9	74.7	24.0	33.5	12.0	80.6	12.0	45.4
Change Period (Y+Rc), s	5.4	5.4	5.4	5.4	5.4	5.4	5.4	5.4
Max Green Setting (Gmax), s	21.0	57.8	18.6	31.0	9.4	69.4	6.6	43.0
Max Q Clear Time (g_c+I1), s	12.1	40.7	18.6	26.3	6.7	55.4	8.1	20.7
Green Ext Time (p_c), s	0.4	13.9	0.0	1.7	0.1	11.7	0.0	4.1

Intersection Summary	
HCM 2010 Ctrl Delay	43.3
HCM 2010 LOS	D

Movement	EBL	EBT	WBT	WBR	SBL	SBR
Lane Configurations						
Traffic Volume (veh/h)	36	808	1627	80	198	65
Future Volume (veh/h)	36	808	1627	80	198	65
Number	5	2	6	16	7	14
Initial Q (Qb), veh	0	0	0	0	0	0
Ped-Bike Adj(A_pbT)	1.00			1.00	1.00	1.00
Parking Bus, Adj	1.00	1.00	1.00	1.00	1.00	1.00
Adj Sat Flow, veh/h/ln	1863	1863	1863	1900	1863	1863
Adj Flow Rate, veh/h	47	878	1643	95	241	88
Adj No. of Lanes	1	2	2	0	1	1
Peak Hour Factor	0.77	0.92	0.99	0.84	0.82	0.74
Percent Heavy Veh, %	2	2	2	2	2	2
Cap, veh/h	204	2747	2641	152	269	241
Arrive On Green	1.00	1.00	0.78	0.78	0.15	0.15
Sat Flow, veh/h	277	3632	3495	196	1774	1583
Grp Volume(v), veh/h	47	878	850	888	241	88
Grp Sat Flow(s),veh/h/ln	277	1770	1770	1828	1774	1583
Q Serve(g_s), s	8.9	0.0	31.0	31.7	20.0	7.5
Cycle Q Clear(g_c), s	40.6	0.0	31.0	31.7	20.0	7.5
Prop In Lane	1.00			0.11	1.00	1.00
Lane Grp Cap(c), veh/h	204	2747	1373	1419	269	241
V/C Ratio(X)	0.23	0.32	0.62	0.63	0.89	0.37
Avail Cap(c_a), veh/h	204	2747	1373	1419	397	355
HCM Platoon Ratio	2.00	2.00	1.00	1.00	1.00	1.00
Upstream Filter(I)	0.64	0.64	0.60	0.60	1.00	1.00
Uniform Delay (d), s/veh	5.5	0.0	7.2	7.3	62.4	57.1
Incr Delay (d2), s/veh	1.7	0.2	0.5	0.5	16.2	0.9
Initial Q Delay(d3),s/veh	0.0	0.0	0.0	0.0	0.0	0.0
%ile BackOfQ(50%),veh/ln	0.8	0.1	15.1	16.0	11.1	3.3
LnGrp Delay(d),s/veh	7.2	0.2	7.7	7.8	78.6	58.0
LnGrp LOS	A	A	A	A	E	E
Approach Vol, veh/h		925	1738		329	
Approach Delay, s/veh		0.6	7.8		73.1	
Approach LOS		A	A		E	

Timer	1	2	3	4	5	6	7	8
Assigned Phs		2		4		6		
Phs Duration (G+Y+Rc), s		121.8		28.2		121.8		
Change Period (Y+Rc), s		5.4		5.4		5.4		
Max Green Setting (Gmax), s		105.6		33.6		105.6		
Max Q Clear Time (g_c+I1), s		42.6		22.0		33.7		
Green Ext Time (p_c), s		39.5		0.8		42.6		

Intersection Summary	
HCM 2010 Ctrl Delay	12.7
HCM 2010 LOS	B

Movement	EBL	EBT	EBR	WBL	WBT	WBR	NBL	NBT	NBR	SBL	SBT	SBR
Lane Configurations												
Traffic Volume (veh/h)	234	594	11	10	1546	37	66	5	9	131	3	363
Future Volume (veh/h)	234	594	11	10	1546	37	66	5	9	131	3	363
Number	5	2	12	1	6	16	3	8	18	7	4	14
Initial Q (Qb), veh	0	0	0	0	0	0	0	0	0	0	0	0
Ped-Bike Adj(A_pbT)	1.00		1.00	1.00		1.00	1.00		1.00	1.00		1.00
Parking Bus, Adj	1.00	1.00	1.00	1.00	1.00	1.00	1.00	1.00	1.00	1.00	1.00	1.00
Adj Sat Flow, veh/h/ln	1863	1863	1900	1863	1863	1900	1900	1863	1863	1900	1863	1863
Adj Flow Rate, veh/h	269	660	16	12	1737	52	108	16	12	152	8	399
Adj No. of Lanes	1	2	0	1	2	0	0	1	1	0	1	1
Peak Hour Factor	0.87	0.90	0.69	0.83	0.89	0.71	0.61	0.31	0.75	0.86	0.38	0.91
Percent Heavy Veh, %	2	2	2	2	2	2	2	2	2	2	2	2
Cap, veh/h	294	2628	64	504	2104	63	303	39	291	307	14	463
Arrive On Green	0.11	0.74	0.74	0.60	0.60	0.60	0.18	0.18	0.18	0.18	0.18	0.18
Sat Flow, veh/h	1774	3532	86	760	3509	105	1404	212	1583	1412	74	1583
Grp Volume(v), veh/h	269	331	345	12	873	916	124	0	12	160	0	399
Grp Sat Flow(s),veh/h/ln	1774	1770	1848	760	1770	1844	1617	0	1583	1486	0	1583
Q Serve(g_s), s	13.7	8.8	8.8	1.0	58.5	59.3	0.0	0.0	0.9	4.8	0.0	27.6
Cycle Q Clear(g_c), s	13.7	8.8	8.8	1.0	58.5	59.3	9.2	0.0	0.9	14.0	0.0	27.6
Prop In Lane	1.00		0.05	1.00		0.06	0.87		1.00	0.95		1.00
Lane Grp Cap(c), veh/h	294	1317	1375	504	1061	1106	342	0	291	320	0	463
V/C Ratio(X)	0.91	0.25	0.25	0.02	0.82	0.83	0.36	0.00	0.04	0.50	0.00	0.86
Avail Cap(c_a), veh/h	393	1317	1375	504	1061	1106	342	0	291	320	0	463
HCM Platoon Ratio	1.00	1.00	1.00	1.00	1.00	1.00	1.00	1.00	1.00	1.00	1.00	1.00
Upstream Filter(I)	0.96	0.96	0.96	1.00	1.00	1.00	1.00	0.00	1.00	1.00	0.00	1.00
Uniform Delay (d), s/veh	44.2	6.0	6.0	12.2	23.7	23.9	53.7	0.0	50.3	55.4	0.0	50.2
Incr Delay (d2), s/veh	20.7	0.4	0.4	0.1	7.2	7.2	0.6	0.0	0.1	1.2	0.0	15.3
Initial Q Delay(d3),s/veh	0.0	0.0	0.0	0.0	0.0	0.0	0.0	0.0	0.0	0.0	0.0	0.0
%ile BackOfQ(50%),veh/ln	12.7	4.4	4.6	0.2	30.5	32.2	4.6	0.0	0.4	6.2	0.0	17.6
LnGrp Delay(d),s/veh	64.9	6.5	6.5	12.3	30.9	31.1	54.3	0.0	50.4	56.6	0.0	65.5
LnGrp LOS	E	A	A	B	C	C	D		D	E		E
Approach Vol, veh/h		945			1801			136			559	
Approach Delay, s/veh		23.1			30.9			54.0			63.0	
Approach LOS		C			C			D			E	

Timer	1	2	3	4	5	6	7	8
Assigned Phs		2		4	5	6		8
Phs Duration (G+Y+Rc), s		117.0		33.0	21.6	95.4		33.0
Change Period (Y+Rc), s		5.4		5.4	5.4	5.4		5.4
Max Green Setting (Gmax), s		111.6		27.6	24.6	81.6		27.6
Max Q Clear Time (g_c+I1), s		10.8		29.6	15.7	61.3		11.2
Green Ext Time (p_c), s		39.3		0.0	0.5	15.7		2.9

Intersection Summary	
HCM 2010 Ctrl Delay	34.9
HCM 2010 LOS	C

Movement	EBL	EBT	EBR	WBL	WBT	WBR	NBL	NBT	NBR	SBL	SBT	SBR
Lane Configurations												
Traffic Volume (veh/h)	339	166	269	261	309	29	305	1367	83	75	2713	424
Future Volume (veh/h)	339	166	269	261	309	29	305	1367	83	75	2713	424
Number	5	2	12	1	6	16	3	8	18	7	4	14
Initial Q (Qb), veh	0	0	0	0	0	0	0	0	0	0	0	0
Ped-Bike Adj(A_pbT)	1.00		1.00	1.00		1.00	1.00		1.00	1.00		1.00
Parking Bus, Adj	1.00	1.00	1.00	1.00	1.00	1.00	1.00	1.00	1.00	1.00	1.00	1.00
Adj Sat Flow, veh/h/ln	1863	1863	1863	1863	1863	1900	1863	1863	1900	1863	1863	1863
Adj Flow Rate, veh/h	381	195	0	230	450	41	339	1424	104	101	2981	511
Adj No. of Lanes	2	1	1	1	2	0	2	3	0	1	3	1
Peak Hour Factor	0.89	0.85	0.86	0.85	0.90	0.70	0.90	0.96	0.80	0.74	0.91	0.83
Percent Heavy Veh, %	2	2	2	2	2	2	2	2	2	2	2	2
Cap, veh/h	464	243	207	220	417	38	312	2696	197	209	2597	809
Arrive On Green	0.13	0.13	0.00	0.12	0.12	0.12	0.09	0.56	0.56	0.04	0.51	0.51
Sat Flow, veh/h	3548	1863	1583	1774	3366	305	3442	4837	353	1774	5085	1583
Grp Volume(v), veh/h	381	195	0	230	248	243	339	998	530	101	2981	511
Grp Sat Flow(s),veh/h/ln	1774	1863	1583	1774	1863	1809	1721	1695	1800	1774	1695	1583
Q Serve(g_s), s	15.7	15.2	0.0	18.6	18.6	18.6	13.6	27.7	27.7	4.6	76.6	35.0
Cycle Q Clear(g_c), s	15.7	15.2	0.0	18.6	18.6	18.6	13.6	27.7	27.7	4.6	76.6	35.0
Prop In Lane	1.00		1.00	1.00		0.17	1.00		0.20	1.00		1.00
Lane Grp Cap(c), veh/h	464	243	207	220	231	224	312	1890	1003	209	2597	809
V/C Ratio(X)	0.82	0.80	0.00	1.05	1.07	1.08	1.09	0.53	0.53	0.48	1.15	0.63
Avail Cap(c_a), veh/h	464	243	207	220	231	224	312	1890	1003	250	2597	809
HCM Platoon Ratio	1.00	1.00	1.00	1.00	1.00	1.00	1.00	1.00	1.00	1.00	1.00	1.00
Upstream Filter(I)	1.00	1.00	0.00	1.00	1.00	1.00	1.00	1.00	1.00	1.00	1.00	1.00
Uniform Delay (d), s/veh	63.5	63.3	0.0	65.7	65.7	65.7	68.2	20.8	20.8	25.0	36.7	26.5
Incr Delay (d2), s/veh	15.1	23.6	0.0	73.1	80.5	83.7	76.0	0.3	0.5	1.7	71.6	1.6
Initial Q Delay(d3),s/veh	0.0	0.0	0.0	0.0	0.0	0.0	0.0	0.0	0.0	0.0	0.0	0.0
%ile BackOfQ(50%),veh/ln	8.6	9.4	0.0	13.6	14.7	14.5	9.8	13.0	13.8	2.4	52.8	15.5
LnGrp Delay(d),s/veh	78.6	86.9	0.0	138.8	146.2	149.4	144.2	21.1	21.3	26.8	108.3	28.1
LnGrp LOS	E	F		F	F	F	F	C	C	C	F	C
Approach Vol, veh/h		576			721			1867			3593	
Approach Delay, s/veh		81.4			144.9			43.5			94.6	
Approach LOS		F			F			D			F	

Timer	1	2	3	4	5	6	7	8
Assigned Phs		2	3	4		6	7	8
Phs Duration (G+Y+Rc), s		25.0	19.0	82.0		24.0	12.0	89.0
Change Period (Y+Rc), s		5.4	5.4	5.4		5.4	5.4	5.4
Max Green Setting (Gmax), s		19.6	13.6	76.6		18.6	10.0	80.2
Max Q Clear Time (g_c+I1), s		17.7	15.6	78.6		20.6	6.6	29.7
Green Ext Time (p_c), s		0.5	0.0	0.0		0.0	0.1	19.3

Intersection Summary	
HCM 2010 Ctrl Delay	84.7
HCM 2010 LOS	F

Notes

User approved volume balancing among the lanes for turning movement.

Movement	EBL	EBT	EBR	WBL	WBT	WBR	NBL	NBT	NBR	SBL	SBT	SBR
Lane Configurations												
Traffic Volume (veh/h)	23	272	37	19	481	45	29	33	9	62	129	116
Future Volume (veh/h)	23	272	37	19	481	45	29	33	9	62	129	116
Number	5	2	12	1	6	16	3	8	18	7	4	14
Initial Q (Qb), veh	0	0	0	0	0	0	0	0	0	0	0	0
Ped-Bike Adj(A_pbT)	1.00		1.00	1.00		1.00	1.00		1.00	1.00		1.00
Parking Bus, Adj	1.00	1.00	1.00	1.00	1.00	1.00	1.00	1.00	1.00	1.00	1.00	1.00
Adj Sat Flow, veh/h/ln	1863	1863	1900	1863	1863	1900	1863	1863	1900	1863	1863	1900
Adj Flow Rate, veh/h	32	309	52	28	559	56	41	52	12	84	136	171
Adj No. of Lanes	1	1	0	1	1	0	1	1	0	1	1	0
Peak Hour Factor	0.72	0.88	0.71	0.68	0.86	0.80	0.70	0.63	0.75	0.74	0.95	0.68
Percent Heavy Veh, %	2	2	2	2	2	2	2	2	2	2	2	2
Cap, veh/h	247	638	107	423	678	68	217	290	67	428	162	204
Arrive On Green	0.03	0.41	0.41	0.03	0.41	0.41	0.04	0.20	0.20	0.06	0.22	0.22
Sat Flow, veh/h	1774	1555	262	1774	1666	167	1774	1465	338	1774	751	945
Grp Volume(v), veh/h	32	0	361	28	0	615	41	0	64	84	0	307
Grp Sat Flow(s),veh/h/ln	1774	0	1817	1774	0	1833	1774	0	1803	1774	0	1696
Q Serve(g_s), s	0.7	0.0	10.4	0.6	0.0	21.2	1.3	0.0	2.1	2.6	0.0	12.3
Cycle Q Clear(g_c), s	0.7	0.0	10.4	0.6	0.0	21.2	1.3	0.0	2.1	2.6	0.0	12.3
Prop In Lane	1.00		0.14	1.00		0.09	1.00		0.19	1.00		0.56
Lane Grp Cap(c), veh/h	247	0	745	423	0	746	217	0	357	428	0	367
V/C Ratio(X)	0.13	0.00	0.48	0.07	0.00	0.82	0.19	0.00	0.18	0.20	0.00	0.84
Avail Cap(c_a), veh/h	316	0	990	497	0	999	275	0	481	472	0	469
HCM Platoon Ratio	1.00	1.00	1.00	1.00	1.00	1.00	1.00	1.00	1.00	1.00	1.00	1.00
Upstream Filter(I)	1.00	0.00	1.00	1.00	0.00	1.00	1.00	0.00	1.00	1.00	0.00	1.00
Uniform Delay (d), s/veh	14.6	0.0	15.4	12.2	0.0	18.7	22.0	0.0	23.6	20.7	0.0	26.6
Incr Delay (d2), s/veh	0.2	0.0	0.5	0.1	0.0	4.3	0.4	0.0	0.2	0.2	0.0	10.2
Initial Q Delay(d3),s/veh	0.0	0.0	0.0	0.0	0.0	0.0	0.0	0.0	0.0	0.0	0.0	0.0
%ile BackOfQ(50%),veh/ln	0.4	0.0	5.2	0.3	0.0	11.5	0.6	0.0	1.1	1.3	0.0	6.7
LnGrp Delay(d),s/veh	14.9	0.0	15.9	12.2	0.0	23.0	22.4	0.0	23.9	20.9	0.0	36.8
LnGrp LOS	B		B	B		C	C		C	C		D
Approach Vol, veh/h		393			643			105			391	
Approach Delay, s/veh		15.8			22.5			23.3			33.3	
Approach LOS		B			C			C			C	

Timer	1	2	3	4	5	6	7	8
Assigned Phs	1	2	3	4	5	6	7	8
Phs Duration (G+Y+Rc), s	7.5	34.4	8.2	20.7	7.7	34.2	9.4	19.4
Change Period (Y+Rc), s	5.4	5.4	5.4	5.4	5.4	5.4	5.4	5.4
Max Green Setting (Gmax), s	5.1	38.6	5.1	19.6	5.1	38.6	5.8	18.9
Max Q Clear Time (g_c+I1), s	2.6	12.4	3.3	14.3	2.7	23.2	4.6	4.1
Green Ext Time (p_c), s	0.0	7.0	0.0	1.0	0.0	5.6	0.0	2.0

Intersection Summary	
HCM 2010 Ctrl Delay	23.6
HCM 2010 LOS	C

Movement	EBL	EBT	EBR	WBL	WBT	WBR	NBL	NBT	NBR	SBL	SBT	SBR
Lane Configurations												
Traffic Volume (veh/h)	23	272	37	19	481	45	29	33	9	62	129	116
Future Volume (veh/h)	23	272	37	19	481	45	29	33	9	62	129	116
Number	5	2	12	1	6	16	3	8	18	7	4	14
Initial Q (Qb), veh	0	0	0	0	0	0	0	0	0	0	0	0
Ped-Bike Adj(A_pbT)	1.00		1.00	1.00		1.00	1.00		1.00	1.00		1.00
Parking Bus, Adj	1.00	1.00	1.00	1.00	1.00	1.00	1.00	1.00	1.00	1.00	1.00	1.00
Adj Sat Flow, veh/h/ln	1863	1863	1900	1863	1863	1900	1863	1863	1900	1863	1863	1900
Adj Flow Rate, veh/h	32	309	52	28	559	56	41	52	12	84	136	171
Adj No. of Lanes	1	1	0	1	1	0	1	1	0	1	1	0
Peak Hour Factor	0.72	0.88	0.71	0.68	0.86	0.80	0.70	0.63	0.75	0.74	0.95	0.68
Percent Heavy Veh, %	2	2	2	2	2	2	2	2	2	2	2	2
Cap, veh/h	247	638	107	423	678	68	217	290	67	428	162	204
Arrive On Green	0.03	0.41	0.41	0.03	0.41	0.41	0.04	0.20	0.20	0.06	0.22	0.22
Sat Flow, veh/h	1774	1555	262	1774	1666	167	1774	1465	338	1774	751	945
Grp Volume(v), veh/h	32	0	361	28	0	615	41	0	64	84	0	307
Grp Sat Flow(s),veh/h/ln	1774	0	1817	1774	0	1833	1774	0	1803	1774	0	1696
Q Serve(g_s), s	0.7	0.0	10.4	0.6	0.0	21.2	1.3	0.0	2.1	2.6	0.0	12.3
Cycle Q Clear(g_c), s	0.7	0.0	10.4	0.6	0.0	21.2	1.3	0.0	2.1	2.6	0.0	12.3
Prop In Lane	1.00		0.14	1.00		0.09	1.00		0.19	1.00		0.56
Lane Grp Cap(c), veh/h	247	0	745	423	0	746	217	0	357	428	0	367
V/C Ratio(X)	0.13	0.00	0.48	0.07	0.00	0.82	0.19	0.00	0.18	0.20	0.00	0.84
Avail Cap(c_a), veh/h	316	0	990	497	0	999	275	0	481	472	0	469
HCM Platoon Ratio	1.00	1.00	1.00	1.00	1.00	1.00	1.00	1.00	1.00	1.00	1.00	1.00
Upstream Filter(I)	1.00	0.00	1.00	1.00	0.00	1.00	1.00	0.00	1.00	1.00	0.00	1.00
Uniform Delay (d), s/veh	14.6	0.0	15.4	12.2	0.0	18.7	22.0	0.0	23.6	20.7	0.0	26.6
Incr Delay (d2), s/veh	0.2	0.0	0.5	0.1	0.0	4.3	0.4	0.0	0.2	0.2	0.0	10.2
Initial Q Delay(d3),s/veh	0.0	0.0	0.0	0.0	0.0	0.0	0.0	0.0	0.0	0.0	0.0	0.0
%ile BackOfQ(50%),veh/ln	0.4	0.0	5.2	0.3	0.0	11.5	0.6	0.0	1.1	1.3	0.0	6.7
LnGrp Delay(d),s/veh	14.9	0.0	15.9	12.2	0.0	23.0	22.4	0.0	23.9	20.9	0.0	36.8
LnGrp LOS	B		B	B		C	C		C	C		D
Approach Vol, veh/h		393			643			105			391	
Approach Delay, s/veh		15.8			22.5			23.3			33.3	
Approach LOS		B			C			C			C	

Timer	1	2	3	4	5	6	7	8
Assigned Phs	1	2	3	4	5	6	7	8
Phs Duration (G+Y+Rc), s	7.5	34.4	8.2	20.7	7.7	34.2	9.4	19.4
Change Period (Y+Rc), s	5.4	5.4	5.4	5.4	5.4	5.4	5.4	5.4
Max Green Setting (Gmax), s	5.1	38.6	5.1	19.6	5.1	38.6	5.8	18.9
Max Q Clear Time (g_c+I1), s	2.6	12.4	3.3	14.3	2.7	23.2	4.6	4.1
Green Ext Time (p_c), s	0.0	7.0	0.0	1.0	0.0	5.6	0.0	2.0

Intersection Summary	
HCM 2010 Ctrl Delay	23.6
HCM 2010 LOS	C

Movement	EBL	EBT	EBR	WBL	WBT	WBR	NBL	NBT	NBR	SBL	SBT	SBR
Lane Configurations												
Traffic Volume (veh/h)	32	280	63	332	430	21	55	174	29	32	493	69
Future Volume (veh/h)	32	280	63	332	430	21	55	174	29	32	493	69
Number	5	2	12	1	6	16	3	8	18	7	4	14
Initial Q (Qb), veh	0	0	0	0	0	0	0	0	0	0	0	0
Ped-Bike Adj(A_pbT)	1.00		1.00	1.00		1.00	1.00		1.00	1.00		1.00
Parking Bus, Adj	1.00	1.00	1.00	1.00	1.00	1.00	1.00	1.00	1.00	1.00	1.00	1.00
Adj Sat Flow, veh/h/ln	1863	1863	1900	1863	1863	1900	1863	1863	1900	1863	1863	1900
Adj Flow Rate, veh/h	40	326	95	382	524	30	64	200	36	48	560	84
Adj No. of Lanes	1	1	0	1	1	0	1	1	0	1	1	0
Peak Hour Factor	0.80	0.86	0.66	0.87	0.82	0.71	0.86	0.87	0.81	0.67	0.88	0.82
Percent Heavy Veh, %	2	2	2	2	2	2	2	2	2	2	2	2
Cap, veh/h	239	342	100	405	702	40	126	542	98	411	553	83
Arrive On Green	0.03	0.25	0.25	0.19	0.40	0.40	0.04	0.35	0.35	0.03	0.35	0.35
Sat Flow, veh/h	1774	1387	404	1774	1745	100	1774	1537	277	1774	1583	238
Grp Volume(v), veh/h	40	0	421	382	0	554	64	0	236	48	0	644
Grp Sat Flow(s),veh/h/ln	1774	0	1791	1774	0	1845	1774	0	1814	1774	0	1821
Q Serve(g_s), s	2.0	0.0	27.6	20.2	0.0	30.6	2.7	0.0	11.5	2.0	0.0	41.6
Cycle Q Clear(g_c), s	2.0	0.0	27.6	20.2	0.0	30.6	2.7	0.0	11.5	2.0	0.0	41.6
Prop In Lane	1.00		0.23	1.00		0.05	1.00		0.15	1.00		0.13
Lane Grp Cap(c), veh/h	239	0	442	405	0	742	126	0	639	411	0	636
V/C Ratio(X)	0.17	0.00	0.95	0.94	0.00	0.75	0.51	0.00	0.37	0.12	0.00	1.01
Avail Cap(c_a), veh/h	260	0	442	405	0	742	138	0	639	428	0	636
HCM Platoon Ratio	1.00	1.00	1.00	1.00	1.00	1.00	1.00	1.00	1.00	1.00	1.00	1.00
Upstream Filter(I)	1.00	0.00	1.00	1.00	0.00	1.00	1.00	0.00	1.00	1.00	0.00	1.00
Uniform Delay (d), s/veh	32.5	0.0	44.2	32.8	0.0	30.5	30.6	0.0	28.7	23.9	0.0	38.8
Incr Delay (d2), s/veh	0.3	0.0	31.0	30.4	0.0	4.2	3.2	0.0	0.4	0.1	0.0	39.1
Initial Q Delay(d3),s/veh	0.0	0.0	0.0	0.0	0.0	0.0	0.0	0.0	0.0	0.0	0.0	0.0
%ile BackOfQ(50%),veh/ln	1.0	0.0	17.5	15.7	0.0	16.4	1.4	0.0	5.8	1.0	0.0	27.7
LnGrp Delay(d),s/veh	32.8	0.0	75.2	63.2	0.0	34.6	33.7	0.0	29.1	24.0	0.0	77.9
LnGrp LOS	C		E	E		C	C		C	C		F
Approach Vol, veh/h		461			936			300			692	
Approach Delay, s/veh		71.5			46.3			30.1			74.1	
Approach LOS		E			D			C			E	

Timer	1	2	3	4	5	6	7	8
Assigned Phs	1	2	3	4	5	6	7	8
Phs Duration (G+Y+Rc), s	27.6	34.8	9.8	47.0	9.1	53.3	9.4	47.4
Change Period (Y+Rc), s	5.4	5.4	5.4	5.4	5.4	5.4	5.4	5.4
Max Green Setting (Gmax), s	22.2	29.4	5.2	41.6	5.1	46.5	5.1	41.7
Max Q Clear Time (g_c+I1), s	22.2	29.6	4.7	43.6	4.0	32.6	4.0	13.5
Green Ext Time (p_c), s	0.0	0.0	0.0	0.0	0.0	5.3	0.0	6.7

Intersection Summary	
HCM 2010 Ctrl Delay	57.2
HCM 2010 LOS	E

Movement	EBL	EBT	EBR	WBL	WBT	WBR	NBL	NBT	NBR	SBL	SBT	SBR
Lane Configurations												
Traffic Volume (veh/h)	55	76	17	3	322	119	18	20	7	208	144	552
Future Volume (veh/h)	55	76	17	3	322	119	18	20	7	208	144	552
Number	5	2	12	1	6	16	3	8	18	7	4	14
Initial Q (Qb), veh	0	0	0	0	0	0	0	0	0	0	0	0
Ped-Bike Adj(A_pbT)	1.00		1.00	1.00		1.00	1.00		1.00	1.00		1.00
Parking Bus, Adj	1.00	1.00	1.00	1.00	1.00	1.00	1.00	1.00	1.00	1.00	1.00	1.00
Adj Sat Flow, veh/h/ln	1863	1863	1900	1863	1863	1900	1863	1863	1900	1863	1863	1863
Adj Flow Rate, veh/h	77	141	28	4	383	157	24	24	9	229	178	627
Adj No. of Lanes	1	1	0	1	1	0	1	1	0	1	1	1
Peak Hour Factor	0.71	0.54	0.61	0.75	0.84	0.76	0.75	0.83	0.75	0.91	0.81	0.88
Percent Heavy Veh, %	2	2	2	2	2	2	2	2	2	2	2	2
Cap, veh/h	232	627	124	525	522	214	353	571	214	686	823	700
Arrive On Green	0.42	0.42	0.42	0.42	0.42	0.42	0.44	0.44	0.44	0.44	0.44	0.44
Sat Flow, veh/h	862	1510	300	1211	1257	515	674	1293	485	1370	1863	1583
Grp Volume(v), veh/h	77	0	169	4	0	540	24	0	33	229	178	627
Grp Sat Flow(s),veh/h/ln	862	0	1810	1211	0	1772	674	0	1777	1370	1863	1583
Q Serve(g_s), s	6.2	0.0	4.5	0.2	0.0	19.4	1.7	0.0	0.8	8.6	4.5	27.6
Cycle Q Clear(g_c), s	25.6	0.0	4.5	4.7	0.0	19.4	6.2	0.0	0.8	9.4	4.5	27.6
Prop In Lane	1.00		0.17	1.00		0.29	1.00		0.27	1.00		1.00
Lane Grp Cap(c), veh/h	232	0	751	525	0	735	353	0	785	686	823	700
V/C Ratio(X)	0.33	0.00	0.22	0.01	0.00	0.73	0.07	0.00	0.04	0.33	0.22	0.90
Avail Cap(c_a), veh/h	315	0	925	642	0	906	418	0	956	818	1002	851
HCM Platoon Ratio	1.00	1.00	1.00	1.00	1.00	1.00	1.00	1.00	1.00	1.00	1.00	1.00
Upstream Filter(I)	1.00	0.00	1.00	1.00	0.00	1.00	1.00	0.00	1.00	1.00	1.00	1.00
Uniform Delay (d), s/veh	29.3	0.0	14.2	15.8	0.0	18.6	14.9	0.0	12.0	14.7	13.0	19.5
Incr Delay (d2), s/veh	0.8	0.0	0.2	0.0	0.0	2.4	0.1	0.0	0.0	0.3	0.1	10.6
Initial Q Delay(d3),s/veh	0.0	0.0	0.0	0.0	0.0	0.0	0.0	0.0	0.0	0.0	0.0	0.0
%ile BackOfQ(50%),veh/ln	1.5	0.0	2.3	0.1	0.0	9.9	0.3	0.0	0.4	3.3	2.3	14.1
LnGrp Delay(d),s/veh	30.2	0.0	14.4	15.8	0.0	21.0	15.0	0.0	12.0	14.9	13.1	30.1
LnGrp LOS	C		B	B		C	B		B	B	B	C
Approach Vol, veh/h		246			544			57			1034	
Approach Delay, s/veh		19.3			21.0			13.3			23.8	
Approach LOS		B			C			B			C	

Timer	1	2	3	4	5	6	7	8
Assigned Phs		2		4		6		8
Phs Duration (G+Y+Rc), s		36.7		38.8		36.7		38.8
Change Period (Y+Rc), s		5.4		5.4		5.4		5.4
Max Green Setting (Gmax), s		38.6		40.6		38.6		40.6
Max Q Clear Time (g_c+I1), s		27.6		29.6		21.4		8.2
Green Ext Time (p_c), s		3.7		3.7		4.7		5.2

Intersection Summary	
HCM 2010 Ctrl Delay	22.1
HCM 2010 LOS	C

Movement	EBL	EBT	EBR	WBL	WBT	WBR	NBL	NBT	NBR	SBL	SBT	SBR
Lane Configurations												
Traffic Volume (veh/h)	61	52	184	100	130	4	142	437	29	2	501	126
Future Volume (veh/h)	61	52	184	100	130	4	142	437	29	2	501	126
Number	5	2	12	1	6	16	3	8	18	7	4	14
Initial Q (Qb), veh	0	0	0	0	0	0	0	0	0	0	0	0
Ped-Bike Adj(A_pbT)	1.00		1.00	1.00		1.00	1.00		1.00	1.00		1.00
Parking Bus, Adj	1.00	1.00	1.00	1.00	1.00	1.00	1.00	1.00	1.00	1.00	1.00	1.00
Adj Sat Flow, veh/h/ln	1863	1863	1900	1863	1863	1900	1863	1863	1900	1863	1863	1900
Adj Flow Rate, veh/h	90	65	214	120	160	12	197	497	44	4	626	140
Adj No. of Lanes	1	1	0	1	1	0	1	1	0	1	1	0
Peak Hour Factor	0.68	0.80	0.86	0.83	0.81	0.33	0.72	0.88	0.66	0.50	0.80	0.90
Percent Heavy Veh, %	2	2	2	2	2	2	2	2	2	2	2	2
Cap, veh/h	321	75	246	220	340	26	231	834	74	335	613	137
Arrive On Green	0.06	0.20	0.20	0.06	0.20	0.20	0.08	0.49	0.49	0.01	0.42	0.42
Sat Flow, veh/h	1774	382	1258	1774	1712	128	1774	1687	149	1774	1475	330
Grp Volume(v), veh/h	90	0	279	120	0	172	197	0	541	4	0	766
Grp Sat Flow(s),veh/h/ln	1774	0	1641	1774	0	1840	1774	0	1836	1774	0	1805
Q Serve(g_s), s	3.5	0.0	14.5	4.8	0.0	7.3	5.5	0.0	18.6	0.1	0.0	36.6
Cycle Q Clear(g_c), s	3.5	0.0	14.5	4.8	0.0	7.3	5.5	0.0	18.6	0.1	0.0	36.6
Prop In Lane	1.00		0.77	1.00		0.07	1.00		0.08	1.00		0.18
Lane Grp Cap(c), veh/h	321	0	321	220	0	366	231	0	908	335	0	750
V/C Ratio(X)	0.28	0.00	0.87	0.54	0.00	0.47	0.85	0.00	0.60	0.01	0.00	1.02
Avail Cap(c_a), veh/h	325	0	358	220	0	403	231	0	908	427	0	750
HCM Platoon Ratio	1.00	1.00	1.00	1.00	1.00	1.00	1.00	1.00	1.00	1.00	1.00	1.00
Upstream Filter(I)	1.00	0.00	1.00	1.00	0.00	1.00	1.00	0.00	1.00	1.00	0.00	1.00
Uniform Delay (d), s/veh	26.3	0.0	34.3	27.6	0.0	31.2	20.9	0.0	15.9	15.6	0.0	25.7
Incr Delay (d2), s/veh	0.5	0.0	18.6	2.8	0.0	0.9	25.2	0.0	1.1	0.0	0.0	38.2
Initial Q Delay(d3),s/veh	0.0	0.0	0.0	0.0	0.0	0.0	0.0	0.0	0.0	0.0	0.0	0.0
%ile BackOfQ(50%),veh/ln	1.7	0.0	8.2	2.5	0.0	3.8	6.3	0.0	9.6	0.1	0.0	26.1
LnGrp Delay(d),s/veh	26.8	0.0	52.9	30.3	0.0	32.1	46.0	0.0	17.0	15.6	0.0	63.9
LnGrp LOS	C		D	C		C	D		B	B		F
Approach Vol, veh/h		369			292			738			770	
Approach Delay, s/veh		46.5			31.4			24.8			63.7	
Approach LOS		D			C			C			E	

Timer	1	2	3	4	5	6	7	8
Assigned Phs	1	2	3	4	5	6	7	8
Phs Duration (G+Y+Rc), s	10.6	22.6	12.8	42.0	10.3	22.9	5.9	48.9
Change Period (Y+Rc), s	5.4	5.4	5.4	5.4	5.4	5.4	5.4	5.4
Max Green Setting (Gmax), s	5.2	19.2	7.4	36.6	5.1	19.3	5.0	39.0
Max Q Clear Time (g_c+I1), s	6.8	16.5	7.5	38.6	5.5	9.3	2.1	20.6
Green Ext Time (p_c), s	0.0	0.7	0.0	0.0	0.0	1.9	0.0	9.1

Intersection Summary	
HCM 2010 Ctrl Delay	43.2
HCM 2010 LOS	D

Movement	EBL	EBT	EBR	WBL	WBT	WBR	NBL	NBT	NBR	SBL	SBT	SBR
Lane Configurations												
Traffic Volume (veh/h)	20	790	120	70	1730	20	0	0	50	10	10	10
Future Volume (veh/h)	20	790	120	70	1730	20	0	0	50	10	10	10
Number	5	2	12	1	6	16	3	8	18	7	4	14
Initial Q (Qb), veh	0	0	0	0	0	0	0	0	0	0	0	0
Ped-Bike Adj(A_pbT)	1.00		1.00	1.00		1.00	1.00		1.00	1.00		1.00
Parking Bus, Adj	1.00	1.00	1.00	1.00	1.00	1.00	1.00	1.00	1.00	1.00	1.00	1.00
Adj Sat Flow, veh/h/ln	1863	1863	1900	1863	1863	1900	0	1863	1900	1900	1863	1863
Adj Flow Rate, veh/h	22	859	130	76	1880	22	0	0	54	11	11	11
Adj No. of Lanes	1	2	0	1	2	0	0	1	0	0	1	1
Peak Hour Factor	0.92	0.92	0.92	0.92	0.92	0.92	0.92	0.92	0.92	0.92	0.92	0.92
Percent Heavy Veh, %	2	2	2	2	2	2	0	2	2	2	2	2
Cap, veh/h	233	2719	411	516	2958	35	0	0	73	46	32	73
Arrive On Green	0.04	1.00	1.00	0.83	0.83	0.83	0.00	0.00	0.05	0.05	0.05	0.05
Sat Flow, veh/h	1774	3083	467	567	3583	42	0	0	1583	213	701	1583
Grp Volume(v), veh/h	22	493	496	76	927	975	0	0	54	22	0	11
Grp Sat Flow(s),veh/h/ln	1774	1770	1780	567	1770	1855	0	0	1583	914	0	1583
Q Serve(g_s), s	0.3	0.0	0.0	4.0	28.8	29.0	0.0	0.0	5.1	0.0	0.0	1.0
Cycle Q Clear(g_c), s	0.3	0.0	0.0	4.0	28.8	29.0	0.0	0.0	5.1	5.1	0.0	1.0
Prop In Lane	1.00		0.26	1.00		0.02	0.00		1.00	0.50		1.00
Lane Grp Cap(c), veh/h	233	1560	1570	516	1461	1532	0	0	73	78	0	73
V/C Ratio(X)	0.09	0.32	0.32	0.15	0.63	0.64	0.00	0.00	0.74	0.28	0.00	0.15
Avail Cap(c_a), veh/h	275	1560	1570	516	1461	1532	0	0	91	96	0	91
HCM Platoon Ratio	2.00	2.00	2.00	1.00	1.00	1.00	1.00	1.00	1.00	1.00	1.00	1.00
Upstream Filter(I)	0.92	0.92	0.92	0.42	0.42	0.42	0.00	0.00	1.00	1.00	0.00	1.00
Uniform Delay (d), s/veh	4.9	0.0	0.0	2.6	4.8	4.8	0.0	0.0	70.6	69.1	0.0	68.7
Incr Delay (d2), s/veh	0.2	0.5	0.5	0.3	0.9	0.9	0.0	0.0	21.2	1.9	0.0	0.9
Initial Q Delay(d3),s/veh	0.0	0.0	0.0	0.0	0.0	0.0	0.0	0.0	0.0	0.0	0.0	0.0
%ile BackOfQ(50%),veh/ln	0.2	0.2	0.2	0.7	14.0	15.0	0.0	0.0	2.7	0.9	0.0	0.9
LnGrp Delay(d),s/veh	5.1	0.5	0.5	2.9	5.7	5.7	0.0	0.0	91.8	71.0	0.0	69.6
LnGrp LOS	A	A	A	A	A	A			F	E		E
Approach Vol, veh/h		1011			1978			54			33	
Approach Delay, s/veh		0.6			5.6			91.8			70.5	
Approach LOS		A			A			F			E	

Timer	1	2	3	4	5	6	7	8
Assigned Phs		2		4	5	6		8
Phs Duration (G+Y+Rc), s		137.7		12.3	8.4	129.3		12.3
Change Period (Y+Rc), s		5.4		5.4	5.4	5.4		5.4
Max Green Setting (Gmax), s		130.6		8.6	6.6	118.6		8.6
Max Q Clear Time (g_c+I1), s		2.0		7.1	2.3	31.0		7.1
Green Ext Time (p_c), s		65.6		0.0	0.0	54.0		0.0

Intersection Summary	
HCM 2010 Ctrl Delay	6.1
HCM 2010 LOS	A

Movement	EBL	EBT	EBR	WBL	WBT	WBR	NBL	NBT	NBR	SBL	SBT	SBR
Lane Configurations												
Traffic Volume (veh/h)	70	750	70	130	1530	80	180	120	120	60	0	20
Future Volume (veh/h)	70	750	70	130	1530	80	180	120	120	60	0	20
Number	5	2	12	1	6	16	3	8	18	7	4	14
Initial Q (Qb), veh	0	0	0	0	0	0	0	0	0	0	0	0
Ped-Bike Adj(A_pbT)	1.00		1.00	1.00		1.00	1.00		1.00	1.00		1.00
Parking Bus, Adj	1.00	1.00	1.00	1.00	1.00	1.00	1.00	1.00	1.00	1.00	1.00	1.00
Adj Sat Flow, veh/h/ln	1863	1863	1900	1863	1863	1900	1863	1863	1863	1863	1863	1863
Adj Flow Rate, veh/h	76	815	76	141	1663	87	196	130	130	65	0	22
Adj No. of Lanes	1	2	0	1	2	0	1	1	1	1	1	1
Peak Hour Factor	0.92	0.92	0.92	0.92	0.92	0.92	0.92	0.92	0.92	0.92	0.92	0.92
Percent Heavy Veh, %	2	2	2	2	2	2	2	2	2	2	2	2
Cap, veh/h	203	2175	203	532	2301	120	304	198	231	165	62	103
Arrive On Green	0.06	1.00	1.00	0.04	0.67	0.67	0.12	0.11	0.11	0.05	0.00	0.03
Sat Flow, veh/h	1774	3273	305	1774	3423	178	1774	1863	1583	1774	1863	1583
Grp Volume(v), veh/h	76	441	450	141	855	895	196	130	130	65	0	22
Grp Sat Flow(s),veh/h/ln	1774	1770	1809	1774	1770	1831	1774	1863	1583	1774	1863	1583
Q Serve(g_s), s	2.1	0.0	0.0	3.8	46.0	47.0	15.6	10.1	11.5	5.3	0.0	2.0
Cycle Q Clear(g_c), s	2.1	0.0	0.0	3.8	46.0	47.0	15.6	10.1	11.5	5.3	0.0	2.0
Prop In Lane	1.00		0.17	1.00		0.10	1.00		1.00	1.00		1.00
Lane Grp Cap(c), veh/h	203	1176	1202	532	1190	1231	304	198	231	165	62	103
V/C Ratio(X)	0.37	0.37	0.37	0.27	0.72	0.73	0.64	0.66	0.56	0.39	0.00	0.21
Avail Cap(c_a), veh/h	271	1176	1202	594	1190	1231	354	236	263	189	72	112
HCM Platoon Ratio	2.00	2.00	2.00	1.00	1.00	1.00	1.00	1.00	1.00	1.00	1.00	1.00
Upstream Filter(I)	0.91	0.91	0.91	0.74	0.74	0.74	1.00	1.00	1.00	1.00	0.00	1.00
Uniform Delay (d), s/veh	16.2	0.0	0.0	7.1	15.6	15.7	58.8	64.4	59.6	66.1	0.0	66.5
Incr Delay (d2), s/veh	1.0	0.8	0.8	0.2	2.8	2.8	3.1	4.9	2.1	1.5	0.0	1.0
Initial Q Delay(d3),s/veh	0.0	0.0	0.0	0.0	0.0	0.0	0.0	0.0	0.0	0.0	0.0	0.0
%ile BackOfQ(50%),veh/ln	1.3	0.3	0.3	1.9	23.3	24.6	7.8	5.5	5.2	2.6	0.0	0.9
LnGrp Delay(d),s/veh	17.3	0.8	0.8	7.3	18.4	18.6	61.9	69.3	61.7	67.6	0.0	67.5
LnGrp LOS	B	A	A	A	B	B	E	E	E	E		E
Approach Vol, veh/h		967			1891			456			87	
Approach Delay, s/veh		2.1			17.6			64.0			67.6	
Approach LOS		A			B			E			E	

Timer	1	2	3	4	5	6	7	8
Assigned Phs	1	2	3	4	5	6	7	8
Phs Duration (G+Y+Rc), s	11.4	105.1	23.2	10.4	10.2	106.3	12.2	21.4
Change Period (Y+Rc), s	5.4	5.4	5.4	5.4	5.4	5.4	5.4	5.4
Max Green Setting (Gmax), s	11.2	89.4	22.0	5.8	10.5	90.1	8.8	19.0
Max Q Clear Time (g_c+I1), s	5.8	2.0	17.6	4.0	4.1	49.0	7.3	13.5
Green Ext Time (p_c), s	0.1	41.8	0.2	0.2	0.1	27.8	0.0	0.6

Intersection Summary	
HCM 2010 Ctrl Delay	20.7
HCM 2010 LOS	C

Movement	EBL	EBT	WBT	WBR	SBL	SBR
Lane Configurations						
Traffic Volume (veh/h)	170	1510	2370	420	260	60
Future Volume (veh/h)	170	1510	2370	420	260	60
Number	5	2	6	16	7	14
Initial Q (Qb), veh	0	0	0	0	0	0
Ped-Bike Adj(A_pbT)	1.00			1.00	1.00	1.00
Parking Bus, Adj	1.00	1.00	1.00	1.00	1.00	1.00
Adj Sat Flow, veh/h/ln	1863	1863	1863	1900	1863	1863
Adj Flow Rate, veh/h	185	1641	2576	457	283	65
Adj No. of Lanes	1	3	3	0	2	1
Peak Hour Factor	0.92	0.92	0.92	0.92	0.92	0.92
Percent Heavy Veh, %	2	2	2	2	2	2
Cap, veh/h	206	4229	3148	528	332	153
Arrive On Green	0.16	1.00	0.72	0.72	0.10	0.10
Sat Flow, veh/h	1774	5253	4554	736	3442	1583
Grp Volume(v), veh/h	185	1641	1957	1076	283	65
Grp Sat Flow(s),veh/h/ln	1774	1695	1695	1733	1721	1583
Q Serve(g_s), s	9.5	0.0	57.9	69.3	12.1	5.8
Cycle Q Clear(g_c), s	9.5	0.0	57.9	69.3	12.1	5.8
Prop In Lane	1.00			0.42	1.00	1.00
Lane Grp Cap(c), veh/h	206	4229	2433	1243	332	153
V/C Ratio(X)	0.90	0.39	0.80	0.86	0.85	0.43
Avail Cap(c_a), veh/h	276	4229	2433	1243	381	175
HCM Platoon Ratio	2.00	2.00	1.00	1.00	1.00	1.00
Upstream Filter(I)	0.92	0.92	0.09	0.09	1.00	1.00
Uniform Delay (d), s/veh	48.1	0.0	14.2	15.8	66.7	63.9
Incr Delay (d2), s/veh	22.9	0.2	0.3	0.8	15.3	1.9
Initial Q Delay(d3),s/veh	0.0	0.0	0.0	0.0	0.0	0.0
%ile BackOfQ(50%),veh/ln	8.7	0.1	26.7	33.1	6.5	5.2
LnGrp Delay(d),s/veh	71.0	0.2	14.4	16.6	82.0	65.7
LnGrp LOS	E	A	B	B	F	E
Approach Vol, veh/h		1826	3033		348	
Approach Delay, s/veh		7.4	15.2		78.9	
Approach LOS		A	B		E	

Timer	1	2	3	4	5	6	7	8
Assigned Phs		2		4	5	6		
Phs Duration (G+Y+Rc), s		130.1		19.9	17.1	113.0		
Change Period (Y+Rc), s		5.4		5.4	5.4	5.4		
Max Green Setting (Gmax), s		122.6		16.6	17.6	99.6		
Max Q Clear Time (g_c+I1), s		2.0		14.1	11.5	71.3		
Green Ext Time (p_c), s		114.0		0.3	0.2	27.9		

Intersection Summary	
HCM 2010 Ctrl Delay	16.7
HCM 2010 LOS	B

Movement	EBT	EBR	WBL	WBT	NBL	NBR
Lane Configurations						
Traffic Volume (veh/h)	1500	60	50	2380	10	100
Future Volume (veh/h)	1500	60	50	2380	10	100
Number	2	12	1	6	3	18
Initial Q (Qb), veh	0	0	0	0	0	0
Ped-Bike Adj(A_pbT)		1.00	1.00		1.00	1.00
Parking Bus, Adj	1.00	1.00	1.00	1.00	1.00	1.00
Adj Sat Flow, veh/h/ln	1863	1900	1863	1863	1863	1863
Adj Flow Rate, veh/h	1630	65	54	2587	11	109
Adj No. of Lanes	3	0	1	3	1	2
Peak Hour Factor	0.92	0.92	0.92	0.92	0.92	0.92
Percent Heavy Veh, %	2	2	2	2	2	2
Cap, veh/h	4063	162	335	4452	93	146
Arrive On Green	1.00	1.00	0.03	0.88	0.05	0.05
Sat Flow, veh/h	5185	200	1774	5253	1774	2787
Grp Volume(v), veh/h	1101	594	54	2587	11	109
Grp Sat Flow(s),veh/h/ln	1695	1827	1774	1695	1774	1393
Q Serve(g_s), s	0.0	0.0	0.7	19.3	0.9	5.8
Cycle Q Clear(g_c), s	0.0	0.0	0.7	19.3	0.9	5.8
Prop In Lane		0.11	1.00		1.00	1.00
Lane Grp Cap(c), veh/h	2745	1480	335	4452	93	146
V/C Ratio(X)	0.40	0.40	0.16	0.58	0.12	0.75
Avail Cap(c_a), veh/h	2745	1480	407	4452	149	234
HCM Platoon Ratio	2.00	2.00	1.00	1.00	1.00	1.00
Upstream Filter(I)	0.89	0.89	0.37	0.37	1.00	1.00
Uniform Delay (d), s/veh	0.0	0.0	1.7	2.4	67.8	70.1
Incr Delay (d2), s/veh	0.4	0.7	0.1	0.2	0.6	7.3
Initial Q Delay(d3),s/veh	0.0	0.0	0.0	0.0	0.0	0.0
%ile BackOfQ(50%),veh/ln	0.1	0.3	0.3	8.9	0.5	2.4
LnGrp Delay(d),s/veh	0.4	0.7	1.8	2.6	68.3	77.4
LnGrp LOS	A	A	A	A	E	E
Approach Vol, veh/h	1695			2641	120	
Approach Delay, s/veh	0.5			2.6	76.6	
Approach LOS	A			A	E	

Timer	1	2	3	4	5	6	7	8
Assigned Phs	1	2				6		8
Phs Duration (G+Y+Rc), s	9.9	126.9				136.7		13.3
Change Period (Y+Rc), s	5.4	5.4				5.4		5.4
Max Green Setting (Gmax), s	10.6	110.6				126.6		12.6
Max Q Clear Time (g_c+I1), s	2.7	2.0				21.3		7.8
Green Ext Time (p_c), s	0.0	98.3				95.5		0.1

Intersection Summary	
HCM 2010 Ctrl Delay	3.8
HCM 2010 LOS	A

HCM 2010 analysis supports speed limit in the range of 25 and 55 mph

Movement	EBL	EBT	WBT	WBR	SBL	SBR
Lane Configurations						
Traffic Volume (veh/h)	140	1280	2120	110	60	40
Future Volume (veh/h)	140	1280	2120	110	60	40
Number	5	2	6	16	7	14
Initial Q (Qb), veh	0	0	0	0	0	0
Ped-Bike Adj(A_pbT)	1.00			1.00	1.00	1.00
Parking Bus, Adj	1.00	1.00	1.00	1.00	1.00	1.00
Adj Sat Flow, veh/h/ln	1863	1863	1863	1900	1863	1863
Adj Flow Rate, veh/h	152	1391	2304	120	65	43
Adj No. of Lanes	1	3	3	0	1	1
Peak Hour Factor	0.92	0.92	0.92	0.92	0.92	0.92
Percent Heavy Veh, %	2	2	2	2	2	2
Cap, veh/h	197	4466	4006	207	88	79
Arrive On Green	0.03	0.88	0.81	0.81	0.05	0.05
Sat Flow, veh/h	1774	5253	5119	256	1774	1583
Grp Volume(v), veh/h	152	1391	1572	852	65	43
Grp Sat Flow(s),veh/h/ln	1774	1695	1695	1818	1774	1583
Q Serve(g_s), s	2.0	6.9	24.8	25.3	5.4	4.0
Cycle Q Clear(g_c), s	2.0	6.9	24.8	25.3	5.4	4.0
Prop In Lane	1.00			0.14	1.00	1.00
Lane Grp Cap(c), veh/h	197	4466	2743	1470	88	79
V/C Ratio(X)	0.77	0.31	0.57	0.58	0.74	0.55
Avail Cap(c_a), veh/h	394	4466	2743	1470	161	144
HCM Platoon Ratio	1.00	1.00	1.00	1.00	1.00	1.00
Upstream Filter(I)	1.00	1.00	0.68	0.68	1.00	1.00
Uniform Delay (d), s/veh	23.9	1.5	5.1	5.1	70.3	69.6
Incr Delay (d2), s/veh	6.2	0.2	0.2	0.4	11.3	5.8
Initial Q Delay(d3),s/veh	0.0	0.0	0.0	0.0	0.0	0.0
%ile BackOfQ(50%),veh/ln	5.5	3.2	11.4	12.7	2.9	3.6
LnGrp Delay(d),s/veh	30.1	1.7	5.3	5.5	81.6	75.4
LnGrp LOS	C	A	A	A	F	E
Approach Vol, veh/h		1543	2424		108	
Approach Delay, s/veh		4.5	5.4		79.1	
Approach LOS		A	A		E	

Timer	1	2	3	4	5	6	7	8
Assigned Phs		2		4	5	6		
Phs Duration (G+Y+Rc), s		137.1		12.9	10.4	126.8		
Change Period (Y+Rc), s		5.4		5.4	5.4	5.4		
Max Green Setting (Gmax), s		125.6		13.6	21.6	98.6		
Max Q Clear Time (g_c+I1), s		8.9		7.4	4.0	27.3		
Green Ext Time (p_c), s		93.8		0.1	0.3	62.1		

Intersection Summary	
HCM 2010 Ctrl Delay	7.0
HCM 2010 LOS	A

Movement	EBL	EBT	EBR	WBL	WBT	WBR	NBL	NBT	NBR	SBL	SBT	SBR
Lane Configurations												
Traffic Volume (veh/h)	80	620	80	180	1100	180	90	0	130	150	0	70
Future Volume (veh/h)	80	620	80	180	1100	180	90	0	130	150	0	70
Number	5	2	12	1	6	16	3	8	18	7	4	14
Initial Q (Qb), veh	0	0	0	0	0	0	0	0	0	0	0	0
Ped-Bike Adj(A_pbT)	1.00		1.00	1.00		1.00	1.00		1.00	1.00		1.00
Parking Bus, Adj	1.00	1.00	1.00	1.00	1.00	1.00	1.00	1.00	1.00	1.00	1.00	1.00
Adj Sat Flow, veh/h/ln	1863	1863	1900	1863	1863	1900	1900	1863	1900	1900	1863	1863
Adj Flow Rate, veh/h	87	674	87	196	1196	196	98	0	141	163	0	76
Adj No. of Lanes	1	2	0	1	2	0	0	2	0	0	1	1
Peak Hour Factor	0.92	0.92	0.92	0.92	0.92	0.92	0.92	0.92	0.92	0.92	0.92	0.92
Percent Heavy Veh, %	2	2	2	2	2	2	2	2	2	2	2	2
Cap, veh/h	228	1741	224	547	1768	288	151	0	400	295	0	439
Arrive On Green	0.07	1.00	1.00	0.06	0.58	0.58	0.28	0.00	0.28	0.28	0.00	0.28
Sat Flow, veh/h	1774	3154	407	1774	3048	497	371	0	1441	891	0	1583
Grp Volume(v), veh/h	87	378	383	196	692	700	98	0	141	163	0	76
Grp Sat Flow(s),veh/h/ln	1774	1770	1791	1774	1770	1775	371	0	1441	891	0	1583
Q Serve(g_s), s	3.3	0.0	0.0	7.1	40.4	41.0	11.1	0.0	11.8	18.1	0.0	5.5
Cycle Q Clear(g_c), s	3.3	0.0	0.0	7.1	40.4	41.0	41.0	0.0	11.8	29.9	0.0	5.5
Prop In Lane	1.00		0.23	1.00		0.28	1.00		1.00	1.00		1.00
Lane Grp Cap(c), veh/h	228	977	989	547	1027	1030	151	0	400	295	0	439
V/C Ratio(X)	0.38	0.39	0.39	0.36	0.67	0.68	0.65	0.00	0.35	0.55	0.00	0.17
Avail Cap(c_a), veh/h	304	977	989	644	1027	1030	151	0	400	295	0	439
HCM Platoon Ratio	2.00	2.00	2.00	1.00	1.00	1.00	1.00	1.00	1.00	1.00	1.00	1.00
Upstream Filter(I)	0.94	0.94	0.94	0.09	0.09	0.09	1.00	0.00	1.00	1.00	0.00	1.00
Uniform Delay (d), s/veh	18.6	0.0	0.0	12.2	21.7	21.8	68.9	0.0	43.4	55.4	0.0	41.1
Incr Delay (d2), s/veh	1.0	1.1	1.1	0.0	0.3	0.3	9.4	0.0	0.5	2.2	0.0	0.2
Initial Q Delay(d3),s/veh	0.0	0.0	0.0	0.0	0.0	0.0	0.0	0.0	0.0	0.0	0.0	0.0
%ile BackOfQ(50%),veh/ln	1.7	0.3	0.3	3.4	19.7	20.1	4.5	0.0	4.8	6.4	0.0	2.4
LnGrp Delay(d),s/veh	19.6	1.1	1.1	12.2	22.0	22.2	78.3	0.0	43.9	57.6	0.0	41.3
LnGrp LOS	B	A	A	B	C	C	E		D	E		D
Approach Vol, veh/h		848			1588			239			239	
Approach Delay, s/veh		3.0			20.9			58.0			52.4	
Approach LOS		A			C			E			D	

Timer	1	2	3	4	5	6	7	8
Assigned Phs	1	2		4	5	6		8
Phs Duration (G+Y+Rc), s	14.8	88.2		47.0	10.6	92.4		47.0
Change Period (Y+Rc), s	5.4	5.4		5.4	5.4	5.4		5.4
Max Green Setting (Gmax), s	17.6	74.6		41.6	11.6	80.6		41.6
Max Q Clear Time (g_c+I1), s	9.1	2.0		31.9	5.3	43.0		43.0
Green Ext Time (p_c), s	0.3	26.4		2.0	0.1	20.4		0.0

Intersection Summary	
HCM 2010 Ctrl Delay	21.3
HCM 2010 LOS	C

Movement	EBL	EBT	EBR	WBL	WBT	WBR	NBL	NBT	NBR	SBL	SBT	SBR
Lane Configurations												
Traffic Volume (veh/h)	70	520	70	180	840	180	20	90	110	110	90	20
Future Volume (veh/h)	70	520	70	180	840	180	20	90	110	110	90	20
Number	5	2	12	1	6	16	3	8	18	7	4	14
Initial Q (Qb), veh	0	0	0	0	0	0	0	0	0	0	0	0
Ped-Bike Adj(A_pbT)	1.00		1.00	1.00		1.00	1.00		1.00	1.00		1.00
Parking Bus, Adj	1.00	1.00	1.00	1.00	1.00	1.00	1.00	1.00	1.00	1.00	1.00	1.00
Adj Sat Flow, veh/h/ln	1863	1863	1900	1863	1863	1900	1863	1863	1900	1863	1863	1900
Adj Flow Rate, veh/h	76	565	76	196	913	196	22	98	120	120	98	22
Adj No. of Lanes	1	2	0	1	2	0	1	1	0	1	1	0
Peak Hour Factor	0.92	0.92	0.92	0.92	0.92	0.92	0.92	0.92	0.92	0.92	0.92	0.92
Percent Heavy Veh, %	2	2	2	2	2	2	2	2	2	2	2	2
Cap, veh/h	320	1814	243	609	1759	377	261	113	139	197	291	65
Arrive On Green	0.06	1.00	1.00	0.06	0.61	0.61	0.02	0.15	0.15	0.07	0.20	0.20
Sat Flow, veh/h	1774	3137	421	1774	2900	622	1774	763	935	1774	1474	331
Grp Volume(v), veh/h	76	318	323	196	557	552	22	0	218	120	0	120
Grp Sat Flow(s),veh/h/ln	1774	1770	1788	1774	1770	1753	1774	0	1698	1774	0	1804
Q Serve(g_s), s	2.7	0.0	0.0	6.6	27.1	27.2	1.6	0.0	18.8	8.4	0.0	8.6
Cycle Q Clear(g_c), s	2.7	0.0	0.0	6.6	27.1	27.2	1.6	0.0	18.8	8.4	0.0	8.6
Prop In Lane	1.00		0.24	1.00		0.35	1.00		0.55	1.00		0.18
Lane Grp Cap(c), veh/h	320	1023	1034	609	1073	1063	261	0	252	197	0	357
V/C Ratio(X)	0.24	0.31	0.31	0.32	0.52	0.52	0.08	0.00	0.86	0.61	0.00	0.34
Avail Cap(c_a), veh/h	389	1023	1034	745	1073	1063	292	0	358	236	0	476
HCM Platoon Ratio	2.00	2.00	2.00	1.00	1.00	1.00	1.00	1.00	1.00	1.00	1.00	1.00
Upstream Filter(I)	0.97	0.97	0.97	0.77	0.77	0.77	1.00	0.00	1.00	1.00	0.00	1.00
Uniform Delay (d), s/veh	13.5	0.0	0.0	10.7	17.0	17.0	52.5	0.0	62.4	49.2	0.0	51.7
Incr Delay (d2), s/veh	0.4	0.8	0.8	0.2	1.4	1.4	0.1	0.0	14.3	3.2	0.0	0.6
Initial Q Delay(d3),s/veh	0.0	0.0	0.0	0.0	0.0	0.0	0.0	0.0	0.0	0.0	0.0	0.0
%ile BackOfQ(50%),veh/ln	1.3	0.2	0.2	3.3	13.6	13.5	0.8	0.0	9.8	4.2	0.0	4.3
LnGrp Delay(d),s/veh	13.9	0.8	0.8	10.9	18.3	18.4	52.6	0.0	76.7	52.4	0.0	52.3
LnGrp LOS	B	A	A	B	B	B	D		E	D		D
Approach Vol, veh/h		717			1305			240			240	
Approach Delay, s/veh		2.2			17.2			74.5			52.3	
Approach LOS		A			B			E			D	

Timer	1	2	3	4	5	6	7	8
Assigned Phs	1	2	3	4	5	6	7	8
Phs Duration (G+Y+Rc), s	14.4	92.1	8.4	35.1	10.2	96.4	15.8	27.7
Change Period (Y+Rc), s	5.4	5.4	5.4	5.4	5.4	5.4	5.4	5.4
Max Green Setting (Gmax), s	20.6	62.6	5.6	39.6	10.6	72.6	13.6	31.6
Max Q Clear Time (g_c+I1), s	8.6	2.0	3.6	10.6	4.7	29.2	10.4	20.8
Green Ext Time (p_c), s	0.4	16.8	0.0	2.2	0.1	15.6	0.1	1.5

Intersection Summary	
HCM 2010 Ctrl Delay	21.8
HCM 2010 LOS	C

Movement	EBT	EBR	WBL	WBT	NBL	NBR
Lane Configurations						
Traffic Volume (veh/h)	540	140	210	630	60	90
Future Volume (veh/h)	540	140	210	630	60	90
Number	2	12	1	6	3	18
Initial Q (Qb), veh	0	0	0	0	0	0
Ped-Bike Adj(A_pbT)		1.00	1.00		1.00	1.00
Parking Bus, Adj	1.00	1.00	1.00	1.00	1.00	1.00
Adj Sat Flow, veh/h/ln	1863	1900	1863	1863	1863	1863
Adj Flow Rate, veh/h	587	152	228	685	65	98
Adj No. of Lanes	2	0	1	2	1	1
Peak Hour Factor	0.92	0.92	0.92	0.92	0.92	0.92
Percent Heavy Veh, %	2	2	2	2	2	2
Cap, veh/h	2161	558	636	3023	131	184
Arrive On Green	0.78	0.78	0.04	0.85	0.07	0.07
Sat Flow, veh/h	2879	720	1774	3632	1774	1583
Grp Volume(v), veh/h	372	367	228	685	65	98
Grp Sat Flow(s),veh/h/ln	1770	1736	1774	1770	1774	1583
Q Serve(g_s), s	9.0	9.0	3.7	5.2	5.3	8.7
Cycle Q Clear(g_c), s	9.0	9.0	3.7	5.2	5.3	8.7
Prop In Lane		0.41	1.00		1.00	1.00
Lane Grp Cap(c), veh/h	1373	1347	636	3023	131	184
V/C Ratio(X)	0.27	0.27	0.36	0.23	0.50	0.53
Avail Cap(c_a), veh/h	1373	1347	1017	3023	267	306
HCM Platoon Ratio	1.00	1.00	1.00	1.00	1.00	1.00
Upstream Filter(I)	1.00	1.00	0.82	0.82	1.00	1.00
Uniform Delay (d), s/veh	4.8	4.8	3.0	2.0	66.8	62.4
Incr Delay (d2), s/veh	0.5	0.5	0.3	0.0	2.9	2.4
Initial Q Delay(d3),s/veh	0.0	0.0	0.0	0.0	0.0	0.0
%ile BackOfQ(50%),veh/ln	4.5	4.5	1.8	2.5	2.7	3.9
LnGrp Delay(d),s/veh	5.3	5.3	3.3	2.0	69.7	64.8
LnGrp LOS	A	A	A	A	E	E
Approach Vol, veh/h	739			913	163	
Approach Delay, s/veh	5.3			2.3	66.8	
Approach LOS	A			A	E	

Timer	1	2	3	4	5	6	7	8
Assigned Phs	1	2				6		8
Phs Duration (G+Y+Rc), s	11.8	121.8				133.5		16.5
Change Period (Y+Rc), s	5.4	5.4				5.4		5.4
Max Green Setting (Gmax), s	38.6	72.6				116.6		22.6
Max Q Clear Time (g_c+I1), s	5.7	11.0				7.2		10.7
Green Ext Time (p_c), s	0.6	12.4				12.6		0.3

Intersection Summary	
HCM 2010 Ctrl Delay	9.3
HCM 2010 LOS	A

Movement	EBL	EBT	EBR	WBL	WBT	WBR	NBL	NBT	NBR	SBL	SBT	SBR
Lane Configurations												
Traffic Volume (veh/h)	60	520	60	80	500	80	110	90	20	110	90	20
Future Volume (veh/h)	60	520	60	80	500	80	110	90	20	110	90	20
Number	5	2	12	1	6	16	3	8	18	7	4	14
Initial Q (Qb), veh	0	0	0	0	0	0	0	0	0	0	0	0
Ped-Bike Adj(A_pbT)	1.00		1.00	1.00		1.00	1.00		1.00	1.00		1.00
Parking Bus, Adj	1.00	1.00	1.00	1.00	1.00	1.00	1.00	1.00	1.00	1.00	1.00	1.00
Adj Sat Flow, veh/h/ln	1863	1863	1900	1863	1863	1900	1863	1863	1900	1863	1863	1900
Adj Flow Rate, veh/h	65	565	65	87	543	87	120	98	22	120	98	22
Adj No. of Lanes	1	1	0	1	1	0	1	1	0	1	1	0
Peak Hour Factor	0.92	0.92	0.92	0.92	0.92	0.92	0.92	0.92	0.92	0.92	0.92	0.92
Percent Heavy Veh, %	2	2	2	2	2	2	2	2	2	2	2	2
Cap, veh/h	416	944	109	418	901	144	343	320	72	343	320	72
Arrive On Green	0.58	0.58	0.58	0.58	0.58	0.58	0.22	0.22	0.22	0.22	0.22	0.22
Sat Flow, veh/h	793	1641	189	793	1567	251	1266	1474	331	1266	1474	331
Grp Volume(v), veh/h	65	0	630	87	0	630	120	0	120	120	0	120
Grp Sat Flow(s),veh/h/ln	793	0	1829	793	0	1818	1266	0	1804	1266	0	1804
Q Serve(g_s), s	3.0	0.0	11.6	4.1	0.0	11.7	4.6	0.0	2.9	4.6	0.0	2.9
Cycle Q Clear(g_c), s	14.7	0.0	11.6	15.7	0.0	11.7	7.5	0.0	2.9	7.5	0.0	2.9
Prop In Lane	1.00		0.10	1.00		0.14	1.00		0.18	1.00		0.18
Lane Grp Cap(c), veh/h	416	0	1052	418	0	1046	343	0	392	343	0	392
V/C Ratio(X)	0.16	0.00	0.60	0.21	0.00	0.60	0.35	0.00	0.31	0.35	0.00	0.31
Avail Cap(c_a), veh/h	824	0	1992	825	0	1980	619	0	785	619	0	785
HCM Platoon Ratio	1.00	1.00	1.00	1.00	1.00	1.00	1.00	1.00	1.00	1.00	1.00	1.00
Upstream Filter(I)	1.00	0.00	1.00	1.00	0.00	1.00	1.00	0.00	1.00	1.00	0.00	1.00
Uniform Delay (d), s/veh	12.0	0.0	7.2	12.3	0.0	7.2	20.2	0.0	17.1	20.2	0.0	17.1
Incr Delay (d2), s/veh	0.2	0.0	0.5	0.2	0.0	0.6	0.6	0.0	0.4	0.6	0.0	0.4
Initial Q Delay(d3),s/veh	0.0	0.0	0.0	0.0	0.0	0.0	0.0	0.0	0.0	0.0	0.0	0.0
%ile BackOfQ(50%),veh/ln	0.7	0.0	5.9	0.9	0.0	5.9	1.7	0.0	1.5	1.7	0.0	1.5
LnGrp Delay(d),s/veh	12.1	0.0	7.7	12.5	0.0	7.7	20.8	0.0	17.5	20.8	0.0	17.5
LnGrp LOS	B		A	B		A	C		B	C		B
Approach Vol, veh/h		695			717			240			240	
Approach Delay, s/veh		8.1			8.3			19.2			19.2	
Approach LOS		A			A			B			B	

Timer	1	2	3	4	5	6	7	8
Assigned Phs		2		4		6		8
Phs Duration (G+Y+Rc), s		35.3		16.7		35.3		16.7
Change Period (Y+Rc), s		5.4		5.4		5.4		5.4
Max Green Setting (Gmax), s		56.6		22.6		56.6		22.6
Max Q Clear Time (g_c+I1), s		16.7		9.5		17.7		9.5
Green Ext Time (p_c), s		12.2		1.8		12.1		1.8

Intersection Summary	
HCM 2010 Ctrl Delay	11.0
HCM 2010 LOS	B

Movement	EBL	EBT	EBR	WBL	WBT	WBR	NBL	NBT	NBR	SBL	SBT	SBR
Lane Configurations												
Traffic Volume (veh/h)	103	290	118	51	312	822	254	1101	52	317	742	35
Future Volume (veh/h)	103	290	118	51	312	822	254	1101	52	317	742	35
Number	5	2	12	1	6	16	3	8	18	7	4	14
Initial Q (Qb), veh	0	0	0	0	0	0	0	0	0	0	0	0
Ped-Bike Adj(A_pbT)	1.00		1.00	1.00		1.00	1.00		1.00	1.00		1.00
Parking Bus, Adj	1.00	1.00	1.00	1.00	1.00	1.00	1.00	1.00	1.00	1.00	1.00	1.00
Adj Sat Flow, veh/h/ln	1863	1863	1900	1863	1863	1863	1863	1863	1900	1863	1863	1900
Adj Flow Rate, veh/h	149	326	148	73	520	934	374	1237	66	373	824	55
Adj No. of Lanes	1	1	0	1	1	1	1	2	0	1	2	0
Peak Hour Factor	0.69	0.89	0.80	0.70	0.60	0.88	0.68	0.89	0.79	0.85	0.90	0.64
Percent Heavy Veh, %	2	2	2	2	2	2	2	2	2	2	2	2
Cap, veh/h	152	445	202	232	685	583	394	1039	55	315	918	61
Arrive On Green	0.03	0.37	0.37	0.03	0.37	0.37	0.18	0.30	0.30	0.15	0.27	0.27
Sat Flow, veh/h	1774	1214	551	1774	1863	1583	1774	3418	182	1774	3368	225
Grp Volume(v), veh/h	149	0	474	73	520	934	374	640	663	373	433	446
Grp Sat Flow(s),veh/h/ln	1774	0	1765	1774	1863	1583	1774	1770	1831	1774	1770	1823
Q Serve(g_s), s	5.0	0.0	34.9	3.9	36.7	55.2	25.1	45.6	45.6	22.6	35.3	35.4
Cycle Q Clear(g_c), s	5.0	0.0	34.9	3.9	36.7	55.2	25.1	45.6	45.6	22.6	35.3	35.4
Prop In Lane	1.00		0.31	1.00		1.00	1.00		0.10	1.00		0.12
Lane Grp Cap(c), veh/h	152	0	647	232	685	583	394	538	557	315	482	497
V/C Ratio(X)	0.98	0.00	0.73	0.31	0.76	1.60	0.95	1.19	1.19	1.18	0.90	0.90
Avail Cap(c_a), veh/h	152	0	647	232	685	583	407	538	557	315	482	497
HCM Platoon Ratio	1.00	1.00	1.00	1.00	1.00	1.00	1.00	1.00	1.00	1.00	1.00	1.00
Upstream Filter(I)	1.00	0.00	1.00	1.00	1.00	1.00	1.00	1.00	1.00	1.00	1.00	1.00
Uniform Delay (d), s/veh	49.4	0.0	41.1	32.4	41.6	47.4	42.6	52.2	52.2	48.8	52.5	52.6
Incr Delay (d2), s/veh	66.8	0.0	4.3	0.8	4.9	279.3	31.2	102.6	103.1	110.0	19.4	18.9
Initial Q Delay(d3),s/veh	0.0	0.0	0.0	0.0	0.0	0.0	0.0	0.0	0.0	0.0	0.0	0.0
%ile BackOfQ(50%),veh/ln	6.6	0.0	17.8	1.9	19.9	69.3	18.7	37.6	39.0	22.7	19.9	20.5
LnGrp Delay(d),s/veh	116.2	0.0	45.4	33.2	46.5	326.7	73.8	154.8	155.3	158.8	71.9	71.5
LnGrp LOS	F		D	C	D	F	E	F	F	F	E	E
Approach Vol, veh/h		623			1527			1677			1252	
Approach Delay, s/veh		62.3			217.2			137.0			97.7	
Approach LOS		E			F			F			F	

Timer	1	2	3	4	5	6	7	8
Assigned Phs	1	2	3	4	5	6	7	8
Phs Duration (G+Y+Rc), s	10.6	60.4	32.7	46.3	10.4	60.6	28.0	51.0
Change Period (Y+Rc), s	5.4	5.4	5.4	5.4	5.4	5.4	5.4	5.4
Max Green Setting (Gmax), s	5.2	55.0	28.4	39.8	5.0	55.2	22.6	45.6
Max Q Clear Time (g_c+I1), s	5.9	36.9	27.1	37.4	7.0	57.2	24.6	47.6
Green Ext Time (p_c), s	0.0	10.3	0.2	2.2	0.0	0.0	0.0	0.0

Intersection Summary	
HCM 2010 Ctrl Delay	142.3
HCM 2010 LOS	F

Movement	EBL	EBT	EBR	WBL	WBT	WBR	NBL	NBT	NBR	SBL	SBT	SBR
Lane Configurations												
Traffic Volume (veh/h)	460	1088	61	349	634	727	64	1657	529	348	1259	119
Future Volume (veh/h)	460	1088	61	349	634	727	64	1657	529	348	1259	119
Number	5	2	12	1	6	16	3	8	18	7	4	14
Initial Q (Qb), veh	0	0	0	0	0	0	0	0	0	0	0	0
Ped-Bike Adj(A_pbT)	1.00		1.00	1.00		1.00	1.00		1.00	1.00		1.00
Parking Bus, Adj	1.00	1.00	1.00	1.00	1.00	1.00	1.00	1.00	1.00	1.00	1.00	1.00
Adj Sat Flow, veh/h/ln	1863	1863	1900	1863	1863	1863	1863	1863	1863	1863	1863	1900
Adj Flow Rate, veh/h	465	1236	81	426	893	817	94	1996	653	519	1464	135
Adj No. of Lanes	2	2	0	2	2	1	2	2	1	2	3	0
Peak Hour Factor	0.99	0.88	0.75	0.82	0.71	0.89	0.68	0.83	0.81	0.67	0.86	0.88
Percent Heavy Veh, %	2	2	2	2	2	2	2	2	2	2	2	2
Cap, veh/h	336	905	59	316	929	617	133	1366	756	437	2248	207
Arrive On Green	0.07	0.18	0.18	0.09	0.26	0.26	0.04	0.39	0.39	0.13	0.47	0.47
Sat Flow, veh/h	3442	3373	221	3442	3539	1583	3442	3539	1583	3442	4739	437
Grp Volume(v), veh/h	465	648	669	426	893	817	94	1996	653	519	1047	552
Grp Sat Flow(s),veh/h/ln	1721	1770	1824	1721	1770	1583	1721	1770	1583	1721	1695	1786
Q Serve(g_s), s	16.6	45.6	45.6	15.6	42.3	37.7	4.6	65.6	46.7	21.6	39.9	40.0
Cycle Q Clear(g_c), s	16.6	45.6	45.6	15.6	42.3	37.7	4.6	65.6	46.7	21.6	39.9	40.0
Prop In Lane	1.00		0.12	1.00		1.00	1.00		1.00	1.00		0.24
Lane Grp Cap(c), veh/h	336	475	489	316	929	617	133	1366	756	437	1608	847
V/C Ratio(X)	1.38	1.36	1.37	1.35	0.96	1.33	0.71	1.46	0.86	1.19	0.65	0.65
Avail Cap(c_a), veh/h	336	475	489	316	929	617	182	1366	756	437	1608	847
HCM Platoon Ratio	0.67	0.67	0.67	1.00	1.00	1.00	1.00	1.00	1.00	1.00	1.00	1.00
Upstream Filter(I)	0.78	0.78	0.78	1.00	1.00	1.00	1.00	1.00	1.00	1.00	1.00	1.00
Uniform Delay (d), s/veh	79.4	69.7	69.7	77.2	61.9	34.5	80.8	52.2	39.5	74.2	34.0	34.0
Incr Delay (d2), s/veh	186.7	174.5	175.8	176.6	21.6	157.3	7.5	211.8	10.2	105.0	0.9	1.8
Initial Q Delay(d3),s/veh	0.0	0.0	0.0	0.0	0.0	0.0	0.0	0.0	0.0	0.0	0.0	0.0
%ile BackOfQ(50%),veh/ln	16.6	45.3	46.9	15.2	23.5	43.4	2.3	72.2	22.6	16.6	18.8	20.0
LnGrp Delay(d),s/veh	266.1	244.2	245.5	253.8	83.5	191.8	88.3	264.0	49.6	179.2	34.9	35.8
LnGrp LOS	F	F	F	F	F	F	F	F	D	F	C	D
Approach Vol, veh/h		1782			2136			2743			2118	
Approach Delay, s/veh		250.4			158.9			206.9			70.5	
Approach LOS		F			F			F			E	

Timer	1	2	3	4	5	6	7	8
Assigned Phs	1	2	3	4	5	6	7	8
Phs Duration (G+Y+Rc), s	21.0	51.0	12.0	86.0	22.0	50.0	27.0	71.0
Change Period (Y+Rc), s	5.4	5.4	5.4	5.4	5.4	5.4	5.4	5.4
Max Green Setting (Gmax), s	15.6	45.6	9.0	78.2	16.6	44.6	21.6	65.6
Max Q Clear Time (g_c+I1), s	17.6	47.6	6.6	42.0	18.6	44.3	23.6	67.6
Green Ext Time (p_c), s	0.0	0.0	0.0	17.9	0.0	0.2	0.0	0.0

Intersection Summary	
HCM 2010 Ctrl Delay	171.1
HCM 2010 LOS	F

Movement	EBL	EBT	EBR	WBL	WBT	WBR	NBL	NBT	NBR	SBL	SBT	SBR
Lane Configurations												
Traffic Volume (veh/h)	60	2300	60	210	1710	210	30	0	30	310	20	20
Future Volume (veh/h)	60	2300	60	210	1710	210	30	0	30	310	20	20
Number	5	2	12	1	6	16	3	8	18	7	4	14
Initial Q (Qb), veh	0	0	0	0	0	0	0	0	0	0	0	0
Ped-Bike Adj(A_pbT)	1.00		1.00	1.00		1.00	1.00		1.00	1.00		1.00
Parking Bus, Adj	1.00	1.00	1.00	1.00	1.00	1.00	1.00	1.00	1.00	1.00	1.00	1.00
Adj Sat Flow, veh/h/ln	1863	1863	1900	1863	1863	1900	1900	1863	1900	1863	1863	1863
Adj Flow Rate, veh/h	65	2500	65	228	1859	228	33	0	33	353	0	22
Adj No. of Lanes	1	3	0	1	3	0	0	1	0	2	0	1
Peak Hour Factor	0.92	0.92	0.92	0.92	0.92	0.92	0.92	0.92	0.92	0.92	0.92	0.92
Percent Heavy Veh, %	2	2	2	2	2	2	2	2	2	2	2	2
Cap, veh/h	189	3333	86	251	3208	391	28	0	28	404	0	180
Arrive On Green	0.06	1.00	1.00	0.07	0.70	0.70	0.03	0.00	0.03	0.11	0.00	0.11
Sat Flow, veh/h	1774	5098	132	1774	4595	559	837	0	837	3548	0	1583
Grp Volume(v), veh/h	65	1659	906	228	1368	719	66	0	0	353	0	22
Grp Sat Flow(s),veh/h/ln	1774	1695	1839	1774	1695	1764	1673	0	0	1774	0	1583
Q Serve(g_s), s	2.1	0.0	0.0	9.8	34.7	35.3	5.6	0.0	0.0	16.6	0.0	2.1
Cycle Q Clear(g_c), s	2.1	0.0	0.0	9.8	34.7	35.3	5.6	0.0	0.0	16.6	0.0	2.1
Prop In Lane	1.00		0.07	1.00		0.32	0.50		0.50	1.00		1.00
Lane Grp Cap(c), veh/h	189	2217	1203	251	2367	1231	55	0	0	404	0	180
V/C Ratio(X)	0.34	0.75	0.75	0.91	0.58	0.58	1.20	0.00	0.00	0.87	0.00	0.12
Avail Cap(c_a), veh/h	241	2217	1203	379	2367	1231	55	0	0	513	0	229
HCM Platoon Ratio	2.00	2.00	2.00	1.00	1.00	1.00	1.00	1.00	1.00	1.00	1.00	1.00
Upstream Filter(I)	0.74	0.74	0.74	0.85	0.85	0.85	1.00	0.00	0.00	1.00	0.00	1.00
Uniform Delay (d), s/veh	11.9	0.0	0.0	31.6	13.0	13.1	82.2	0.0	0.0	74.1	0.0	67.7
Incr Delay (d2), s/veh	0.8	1.8	3.3	16.5	0.9	1.7	184.3	0.0	0.0	12.8	0.0	0.3
Initial Q Delay(d3),s/veh	0.0	0.0	0.0	0.0	0.0	0.0	0.0	0.0	0.0	0.0	0.0	0.0
%ile BackOfQ(50%),veh/ln	1.0	0.5	1.1	11.7	16.4	17.8	5.4	0.0	0.0	8.9	0.0	0.9
LnGrp Delay(d),s/veh	12.7	1.8	3.3	48.1	13.9	14.8	266.5	0.0	0.0	87.0	0.0	68.0
LnGrp LOS	B	A	A	D	B	B	F			F		E
Approach Vol, veh/h		2630			2315			66			375	
Approach Delay, s/veh		2.6			17.5			266.5			85.8	
Approach LOS		A			B			F			F	

Timer	1	2	3	4	5	6	7	8
Assigned Phs	1	2		4	5	6		8
Phs Duration (G+Y+Rc), s	17.7	116.6		24.8	10.2	124.1		11.0
Change Period (Y+Rc), s	5.4	5.4		5.4	5.4	5.4		5.4
Max Green Setting (Gmax), s	24.6	93.6		24.6	9.8	108.4		5.6
Max Q Clear Time (g_c+I1), s	11.8	2.0		18.6	4.1	37.3		7.6
Green Ext Time (p_c), s	0.5	86.4		0.7	0.0	67.9		0.0

Intersection Summary	
HCM 2010 Ctrl Delay	18.0
HCM 2010 LOS	B

Notes

User approved volume balancing among the lanes for turning movement.

Movement	EBL	EBT	EBR	WBL	WBT	WBR	NBL	NBT	NBR	SBL	SBT	SBR
Lane Configurations												
Traffic Volume (veh/h)	1549	1145	197	96	838	62	278	893	124	148	479	1079
Future Volume (veh/h)	1549	1145	197	96	838	62	278	893	124	148	479	1079
Number	5	2	12	1	6	16	3	8	18	7	4	14
Initial Q (Qb), veh	0	0	0	0	0	0	0	0	0	0	0	0
Ped-Bike Adj(A_pbT)	1.00		1.00	1.00		1.00	1.00		1.00	1.00		1.00
Parking Bus, Adj	1.00	1.00	1.00	1.00	1.00	1.00	1.00	1.00	1.00	1.00	1.00	1.00
Adj Sat Flow, veh/h/ln	1863	1863	1900	1863	1863	1863	1863	1863	1863	1863	1863	1863
Adj Flow Rate, veh/h	1844	1347	281	120	921	0	348	1076	157	161	544	0
Adj No. of Lanes	2	2	0	1	2	1	1	2	1	1	2	1
Peak Hour Factor	0.84	0.85	0.70	0.80	0.91	0.78	0.80	0.83	0.79	0.92	0.88	0.83
Percent Heavy Veh, %	2	2	2	2	2	2	2	2	2	2	2	2
Cap, veh/h	1247	1470	302	145	700	313	294	970	525	111	758	322
Arrive On Green	0.61	0.84	0.84	0.06	0.20	0.00	0.11	0.27	0.27	0.04	0.20	0.00
Sat Flow, veh/h	3442	2926	601	1774	3539	1583	1774	3539	1583	1774	3725	1583
Grp Volume(v), veh/h	1844	806	822	120	921	0	348	1076	157	161	544	0
Grp Sat Flow(s),veh/h/ln	1721	1770	1757	1774	1770	1583	1774	1770	1583	1774	1863	1583
Q Serve(g_s), s	61.6	52.2	58.5	9.8	33.6	0.0	18.6	46.6	12.5	6.6	23.2	0.0
Cycle Q Clear(g_c), s	61.6	52.2	58.5	9.8	33.6	0.0	18.6	46.6	12.5	6.6	23.2	0.0
Prop In Lane	1.00		0.34	1.00		1.00	1.00		1.00	1.00		1.00
Lane Grp Cap(c), veh/h	1247	889	882	145	700	313	294	970	525	111	758	322
V/C Ratio(X)	1.48	0.91	0.93	0.83	1.32	0.00	1.18	1.11	0.30	1.45	0.72	0.00
Avail Cap(c_a), veh/h	1247	889	882	145	700	313	294	970	525	111	758	322
HCM Platoon Ratio	1.67	1.67	1.67	1.00	1.00	1.00	1.00	1.00	1.00	1.00	1.00	1.00
Upstream Filter(I)	0.64	0.64	0.64	0.94	0.94	0.00	1.00	1.00	1.00	1.00	1.00	0.00
Uniform Delay (d), s/veh	33.6	11.0	11.5	63.4	68.2	0.0	53.6	61.7	42.1	61.5	63.1	0.0
Incr Delay (d2), s/veh	218.2	10.2	12.5	30.1	151.9	0.0	111.4	63.6	0.3	244.5	3.3	0.0
Initial Q Delay(d3),s/veh	0.0	0.0	0.0	0.0	0.0	0.0	0.0	0.0	0.0	0.0	0.0	0.0
%ile BackOfQ(50%),veh/ln	66.7	26.7	30.1	2.0	31.2	0.0	13.8	31.3	5.5	9.5	12.3	0.0
LnGrp Delay(d),s/veh	251.8	21.2	24.1	93.5	220.1	0.0	165.0	125.3	42.4	306.0	66.4	0.0
LnGrp LOS	F	C	C	F	F		F	F	D	F	E	
Approach Vol, veh/h		3472			1041			1581			705	
Approach Delay, s/veh		144.3			205.6			125.8			121.1	
Approach LOS		F			F			F			F	

Timer	1	2	3	4	5	6	7	8
Assigned Phs	1	2	3	4	5	6	7	8
Phs Duration (G+Y+Rc), s	15.2	90.8	24.0	40.0	67.0	39.0	12.0	52.0
Change Period (Y+Rc), s	5.4	5.4	5.4	5.4	5.4	5.4	5.4	5.4
Max Green Setting (Gmax), s	9.8	85.4	18.6	34.6	61.6	33.6	6.6	46.6
Max Q Clear Time (g_c+I1), s	11.8	60.5	20.6	25.2	63.6	35.6	8.6	48.6
Green Ext Time (p_c), s	0.0	21.4	0.0	6.7	0.0	0.0	0.0	0.0

Intersection Summary	
HCM 2010 Ctrl Delay	147.0
HCM 2010 LOS	F

Notes

User approved volume balancing among the lanes for turning movement.

Movement	EBL	EBT	EBR	WBL	WBT	WBR	NBL	NBT	NBR	SBL	SBT	SBR
Lane Configurations												
Traffic Volume (veh/h)	0	1281	188	184	868	0	0	0	0	316	16	6
Future Volume (veh/h)	0	1281	188	184	868	0	0	0	0	316	16	6
Number	5	2	12	1	6	16				7	4	14
Initial Q (Qb), veh	0	0	0	0	0	0				0	0	0
Ped-Bike Adj(A_pbT)	1.00		1.00	1.00		1.00				1.00		1.00
Parking Bus, Adj	1.00	1.00	1.00	1.00	1.00	1.00				1.00	1.00	1.00
Adj Sat Flow, veh/h/ln	0	1863	1863	1863	1863	0				1863	1863	1863
Adj Flow Rate, veh/h	0	1377	0	194	1009	0				379	0	0
Adj No. of Lanes	0	2	1	1	2	0				2	0	1
Peak Hour Factor	1.00	0.93	0.85	0.95	0.86	1.00				0.87	0.70	0.25
Percent Heavy Veh, %	0	2	2	2	2	0				2	2	2
Cap, veh/h	0	2623	1173	404	2877	0				439	0	196
Arrive On Green	0.00	1.00	0.00	0.04	0.81	0.00				0.12	0.00	0.00
Sat Flow, veh/h	0	3632	1583	1774	3632	0				3548	0	1583
Grp Volume(v), veh/h	0	1377	0	194	1009	0				379	0	0
Grp Sat Flow(s),veh/h/ln	0	1770	1583	1774	1770	0				1774	0	1583
Q Serve(g_s), s	0.0	0.0	0.0	4.3	12.7	0.0				17.8	0.0	0.0
Cycle Q Clear(g_c), s	0.0	0.0	0.0	4.3	12.7	0.0				17.8	0.0	0.0
Prop In Lane	0.00		1.00	1.00		0.00				1.00		1.00
Lane Grp Cap(c), veh/h	0	2623	1173	404	2877	0				439	0	196
V/C Ratio(X)	0.00	0.52	0.00	0.48	0.35	0.00				0.86	0.00	0.00
Avail Cap(c_a), veh/h	0	2623	1173	579	2877	0				743	0	332
HCM Platoon Ratio	1.00	2.00	2.00	1.00	1.00	1.00				1.00	1.00	1.00
Upstream Filter(I)	0.00	0.27	0.00	0.92	0.92	0.00				1.00	0.00	0.00
Uniform Delay (d), s/veh	0.0	0.0	0.0	4.1	4.2	0.0				73.1	0.0	0.0
Incr Delay (d2), s/veh	0.0	0.2	0.0	0.8	0.3	0.0				5.5	0.0	0.0
Initial Q Delay(d3),s/veh	0.0	0.0	0.0	0.0	0.0	0.0				0.0	0.0	0.0
%ile BackOfQ(50%),veh/ln	0.0	0.1	0.0	2.1	6.3	0.0				9.1	0.0	0.0
LnGrp Delay(d),s/veh	0.0	0.2	0.0	4.9	4.5	0.0				78.6	0.0	0.0
LnGrp LOS		A		A	A					E		
Approach Vol, veh/h		1377			1203						379	
Approach Delay, s/veh		0.2			4.6						78.6	
Approach LOS		A			A						E	

Timer	1	2	3	4	5	6	7	8
Assigned Phs	1	2		4		6		
Phs Duration (G+Y+Rc), s	12.2	131.4		26.4		143.6		
Change Period (Y+Rc), s	5.4	5.4		5.4		5.4		
Max Green Setting (Gmax), s	23.6	94.6		35.6		123.6		
Max Q Clear Time (g_c+I1), s	6.3	2.0		19.8		14.7		
Green Ext Time (p_c), s	0.5	39.0		1.2		40.9		

Intersection Summary	
HCM 2010 Ctrl Delay	12.0
HCM 2010 LOS	B

Notes

User approved volume balancing among the lanes for turning movement.

Movement	EBL	EBT	EBR	WBL	WBT	WBR	NBL	NBT	NBR	SBL	SBT	SBR
Lane Configurations												
Traffic Volume (veh/h)	246	1338	0	0	909	605	172	78	190	0	0	0
Future Volume (veh/h)	246	1338	0	0	909	605	172	78	190	0	0	0
Number	5	2	12	1	6	16	3	8	18			
Initial Q (Qb), veh	0	0	0	0	0	0	0	0	0			
Ped-Bike Adj(A_pbT)	1.00		1.00	1.00		1.00	1.00		1.00			
Parking Bus, Adj	1.00	1.00	1.00	1.00	1.00	1.00	1.00	1.00	1.00			
Adj Sat Flow, veh/h/ln	1863	1863	0	0	1863	1863	1900	1863	1863			
Adj Flow Rate, veh/h	328	1520	0	0	957	0	249	85	0			
Adj No. of Lanes	1	2	0	0	2	1	0	2	1			
Peak Hour Factor	0.75	0.88	1.00	1.00	0.95	0.85	0.69	0.92	0.81			
Percent Heavy Veh, %	2	2	0	0	2	2	2	2	2			
Cap, veh/h	497	2759	0	0	2382	1066	279	278	249			
Arrive On Green	0.10	1.00	0.00	0.00	0.67	0.00	0.16	0.16	0.00			
Sat Flow, veh/h	1774	3632	0	0	3632	1583	1774	1770	1583			
Grp Volume(v), veh/h	328	1520	0	0	957	0	249	85	0			
Grp Sat Flow(s),veh/h/ln	1774	1770	0	0	1770	1583	1774	1770	1583			
Q Serve(g_s), s	9.8	0.0	0.0	0.0	20.6	0.0	23.4	7.2	0.0			
Cycle Q Clear(g_c), s	9.8	0.0	0.0	0.0	20.6	0.0	23.4	7.2	0.0			
Prop In Lane	1.00		0.00	0.00		1.00	1.00		1.00			
Lane Grp Cap(c), veh/h	497	2759	0	0	2382	1066	279	278	249			
V/C Ratio(X)	0.66	0.55	0.00	0.00	0.40	0.00	0.89	0.31	0.00			
Avail Cap(c_a), veh/h	715	2759	0	0	2382	1066	361	360	322			
HCM Platoon Ratio	1.33	1.33	1.00	1.00	1.00	1.00	1.00	1.00	1.00			
Upstream Filter(I)	0.77	0.77	0.00	0.00	1.00	0.00	1.00	1.00	0.00			
Uniform Delay (d), s/veh	9.2	0.0	0.0	0.0	12.4	0.0	70.3	63.5	0.0			
Incr Delay (d2), s/veh	1.2	0.6	0.0	0.0	0.5	0.0	19.8	0.6	0.0			
Initial Q Delay(d3),s/veh	0.0	0.0	0.0	0.0	0.0	0.0	0.0	0.0	0.0			
%ile BackOfQ(50%),veh/ln	4.8	0.2	0.0	0.0	10.1	0.0	13.0	3.6	0.0			
LnGrp Delay(d),s/veh	10.3	0.6	0.0	0.0	13.0	0.0	90.0	64.1	0.0			
LnGrp LOS	B	A			B		F	E				
Approach Vol, veh/h		1848			957			334				
Approach Delay, s/veh		2.3			13.0			83.4				
Approach LOS		A			B			F				

Timer	1	2	3	4	5	6	7	8
Assigned Phs		2			5	6		8
Phs Duration (G+Y+Rc), s		137.9			18.1	119.8		32.1
Change Period (Y+Rc), s		5.4			5.4	5.4		5.4
Max Green Setting (Gmax), s		124.6			33.6	85.6		34.6
Max Q Clear Time (g_c+I1), s		2.0			11.8	22.6		25.4
Green Ext Time (p_c), s		45.6			0.9	35.2		1.3

Intersection Summary	
HCM 2010 Ctrl Delay	14.2
HCM 2010 LOS	B

Notes

User approved ignoring U-Turning movement.

Movement	EBL	EBT	EBR	WBL	WBT	WBR	NBL	NBT	NBR	SBL	SBT	SBR
Lane Configurations												
Traffic Volume (veh/h)	138	1148	161	105	890	73	360	384	150	109	239	142
Future Volume (veh/h)	138	1148	161	105	890	73	360	384	150	109	239	142
Number	5	2	12	1	6	16	3	8	18	7	4	14
Initial Q (Qb), veh	0	0	0	0	0	0	0	0	0	0	0	0
Ped-Bike Adj(A_pbT)	1.00		1.00	1.00		1.00	1.00		1.00	1.00		1.00
Parking Bus, Adj	1.00	1.00	1.00	1.00	1.00	1.00	1.00	1.00	1.00	1.00	1.00	1.00
Adj Sat Flow, veh/h/ln	1863	1863	1900	1863	1863	1900	1863	1863	1863	1863	1863	1863
Adj Flow Rate, veh/h	209	1276	209	144	1011	74	424	452	185	154	249	203
Adj No. of Lanes	1	2	0	1	2	0	1	1	1	1	1	1
Peak Hour Factor	0.66	0.90	0.77	0.73	0.88	0.98	0.85	0.85	0.81	0.71	0.96	0.70
Percent Heavy Veh, %	2	2	2	2	2	2	2	2	2	2	2	2
Cap, veh/h	285	1417	230	169	1484	109	420	528	538	206	275	356
Arrive On Green	0.08	0.46	0.46	0.06	0.44	0.44	0.20	0.28	0.28	0.07	0.15	0.15
Sat Flow, veh/h	1774	3049	496	1774	3344	245	1774	1863	1583	1774	1863	1583
Grp Volume(v), veh/h	209	736	749	144	535	550	424	452	185	154	249	203
Grp Sat Flow(s),veh/h/ln	1774	1770	1775	1774	1770	1820	1774	1863	1583	1774	1863	1583
Q Serve(g_s), s	10.8	64.9	66.3	7.5	41.0	41.0	34.7	39.0	14.8	11.6	22.4	19.4
Cycle Q Clear(g_c), s	10.8	64.9	66.3	7.5	41.0	41.0	34.7	39.0	14.8	11.6	22.4	19.4
Prop In Lane	1.00		0.28	1.00		0.13	1.00		1.00	1.00		1.00
Lane Grp Cap(c), veh/h	285	822	825	169	785	808	420	528	538	206	275	356
V/C Ratio(X)	0.73	0.90	0.91	0.85	0.68	0.68	1.01	0.86	0.34	0.75	0.91	0.57
Avail Cap(c_a), veh/h	354	822	825	200	785	808	420	534	543	206	281	361
HCM Platoon Ratio	1.00	1.00	1.00	1.00	1.00	1.00	1.00	1.00	1.00	1.00	1.00	1.00
Upstream Filter(I)	1.00	1.00	1.00	0.90	0.90	0.90	1.00	1.00	1.00	1.00	1.00	1.00
Uniform Delay (d), s/veh	30.4	41.7	42.1	38.7	37.7	37.7	50.4	57.6	41.9	59.5	71.3	58.6
Incr Delay (d2), s/veh	6.0	14.4	15.5	23.1	4.3	4.2	46.6	12.8	0.4	14.0	30.2	2.1
Initial Q Delay(d3),s/veh	0.0	0.0	0.0	0.0	0.0	0.0	0.0	0.0	0.0	0.0	0.0	0.0
%ile BackOfQ(50%),veh/ln	5.8	35.0	36.0	4.7	21.0	21.6	25.1	22.0	6.5	2.2	13.9	8.7
LnGrp Delay(d),s/veh	36.3	56.1	57.6	61.8	42.0	41.9	97.1	70.4	42.3	73.5	101.5	60.6
LnGrp LOS	D	E	E	E	D	D	F	E	D	E	F	E
Approach Vol, veh/h		1694			1229			1061			606	
Approach Delay, s/veh		54.3			44.2			76.2			80.7	
Approach LOS		D			D			E			F	

Timer	1	2	3	4	5	6	7	8
Assigned Phs	1	2	3	4	5	6	7	8
Phs Duration (G+Y+Rc), s	15.0	84.4	40.1	30.5	18.6	80.8	17.0	53.6
Change Period (Y+Rc), s	5.4	5.4	5.4	5.4	5.4	5.4	5.4	5.4
Max Green Setting (Gmax), s	12.6	75.5	34.7	25.6	19.8	68.3	11.6	48.7
Max Q Clear Time (g_c+I1), s	9.5	68.3	36.7	24.4	12.8	43.0	13.6	41.0
Green Ext Time (p_c), s	0.1	6.3	0.0	0.7	0.3	18.7	0.0	3.5

Intersection Summary	
HCM 2010 Ctrl Delay	60.2
HCM 2010 LOS	E

Movement	EBL	EBT	WBT	WBR	SBL	SBR
Lane Configurations						
Traffic Volume (veh/h)	29	1421	1000	81	137	63
Future Volume (veh/h)	29	1421	1000	81	137	63
Number	5	2	6	16	7	14
Initial Q (Qb), veh	0	0	0	0	0	0
Ped-Bike Adj(A_pbT)	1.00			1.00	1.00	1.00
Parking Bus, Adj	1.00	1.00	1.00	1.00	1.00	1.00
Adj Sat Flow, veh/h/ln	1863	1863	1863	1900	1863	1863
Adj Flow Rate, veh/h	37	1692	1111	145	176	84
Adj No. of Lanes	1	2	2	0	1	1
Peak Hour Factor	0.78	0.84	0.90	0.56	0.78	0.75
Percent Heavy Veh, %	2	2	2	2	2	2
Cap, veh/h	362	2913	2592	338	201	180
Arrive On Green	1.00	1.00	0.82	0.82	0.11	0.11
Sat Flow, veh/h	440	3632	3243	410	1774	1583
Grp Volume(v), veh/h	37	1692	623	633	176	84
Grp Sat Flow(s),veh/h/ln	440	1770	1770	1790	1774	1583
Q Serve(g_s), s	1.9	0.0	16.4	16.4	16.6	8.4
Cycle Q Clear(g_c), s	18.3	0.0	16.4	16.4	16.6	8.4
Prop In Lane	1.00			0.23	1.00	1.00
Lane Grp Cap(c), veh/h	362	2913	1457	1474	201	180
V/C Ratio(X)	0.10	0.58	0.43	0.43	0.87	0.47
Avail Cap(c_a), veh/h	362	2913	1457	1474	361	322
HCM Platoon Ratio	2.00	2.00	1.00	1.00	1.00	1.00
Upstream Filter(I)	0.38	0.38	0.91	0.91	1.00	1.00
Uniform Delay (d), s/veh	1.1	0.0	4.1	4.1	74.2	70.6
Incr Delay (d2), s/veh	0.2	0.3	0.2	0.2	11.3	1.9
Initial Q Delay(d3),s/veh	0.0	0.0	0.0	0.0	0.0	0.0
%ile BackOfQ(50%),veh/ln	0.2	0.1	7.9	8.2	8.8	3.8
LnGrp Delay(d),s/veh	1.3	0.3	4.3	4.3	85.4	72.4
LnGrp LOS	A	A	A	A	F	E
Approach Vol, veh/h		1729	1256		260	
Approach Delay, s/veh		0.3	4.3		81.2	
Approach LOS		A	A		F	

Timer	1	2	3	4	5	6	7	8
Assigned Phs		2		4		6		
Phs Duration (G+Y+Rc), s		145.3		24.7		145.3		
Change Period (Y+Rc), s		5.4		5.4		5.4		
Max Green Setting (Gmax), s		124.6		34.6		124.6		
Max Q Clear Time (g_c+I1), s		20.3		18.6		18.4		
Green Ext Time (p_c), s		60.4		0.7		61.0		

Intersection Summary	
HCM 2010 Ctrl Delay	8.4
HCM 2010 LOS	A

Movement	EBL	EBT	EBR	WBL	WBT	WBR	NBL	NBT	NBR	SBL	SBT	SBR
Lane Configurations												
Traffic Volume (veh/h)	578	1139	46	9	693	76	9	4	7	58	3	78
Future Volume (veh/h)	578	1139	46	9	693	76	9	4	7	58	3	78
Number	5	2	12	1	6	16	3	8	18	7	4	14
Initial Q (Qb), veh	0	0	0	0	0	0	0	0	0	0	0	0
Ped-Bike Adj(A_pbT)	1.00		1.00	1.00		1.00	1.00		1.00	1.00		1.00
Parking Bus, Adj	1.00	1.00	1.00	1.00	1.00	1.00	1.00	1.00	1.00	1.00	1.00	1.00
Adj Sat Flow, veh/h/ln	1863	1863	1900	1863	1863	1900	1900	1863	1863	1900	1863	1863
Adj Flow Rate, veh/h	635	1186	72	13	753	104	13	12	9	81	8	98
Adj No. of Lanes	1	2	0	1	2	0	0	1	1	0	1	1
Peak Hour Factor	0.91	0.96	0.64	0.67	0.92	0.73	0.67	0.33	0.75	0.72	0.38	0.80
Percent Heavy Veh, %	2	2	2	2	2	2	2	2	2	2	2	2
Cap, veh/h	663	2914	177	347	2167	299	91	75	122	116	10	122
Arrive On Green	0.13	0.86	0.86	0.69	0.69	0.69	0.08	0.08	0.08	0.08	0.08	0.08
Sat Flow, veh/h	1774	3390	206	439	3125	431	769	970	1583	981	125	1583
Grp Volume(v), veh/h	635	619	639	13	426	431	25	0	9	89	0	98
Grp Sat Flow(s),veh/h/ln	1774	1770	1826	439	1770	1787	1739	0	1583	1106	0	1583
Q Serve(g_s), s	18.6	12.8	12.9	1.6	16.5	16.5	0.0	0.0	0.9	9.6	0.0	10.4
Cycle Q Clear(g_c), s	18.6	12.8	12.9	1.6	16.5	16.5	2.1	0.0	0.9	9.6	0.0	10.4
Prop In Lane	1.00		0.11	1.00		0.24	0.52		1.00	0.91		1.00
Lane Grp Cap(c), veh/h	663	1521	1570	347	1227	1239	166	0	122	0	0	122
V/C Ratio(X)	0.96	0.41	0.41	0.04	0.35	0.35	0.15	0.00	0.07	0.00	0.00	0.80
Avail Cap(c_a), veh/h	1193	1521	1570	347	1227	1239	186	0	142	0	0	238
HCM Platoon Ratio	1.00	1.00	1.00	1.00	1.00	1.00	1.00	1.00	1.00	1.00	1.00	1.00
Upstream Filter(I)	0.75	0.75	0.75	1.00	1.00	1.00	1.00	0.00	1.00	1.00	0.00	1.00
Uniform Delay (d), s/veh	16.8	2.6	2.6	8.2	10.5	10.5	73.4	0.0	72.8	0.0	0.0	77.2
Incr Delay (d2), s/veh	8.5	0.6	0.6	0.2	0.8	0.8	0.4	0.0	0.3	0.0	0.0	11.6
Initial Q Delay(d3),s/veh	0.0	0.0	0.0	0.0	0.0	0.0	0.0	0.0	0.0	0.0	0.0	0.0
%ile BackOfQ(50%),veh/ln	30.7	6.4	6.7	0.2	8.3	8.4	1.1	0.0	0.4	0.0	0.0	4.9
LnGrp Delay(d),s/veh	25.2	3.2	3.2	8.4	11.3	11.3	73.8	0.0	73.1	0.0	0.0	88.7
LnGrp LOS	C	A	A	A	B	B	E		E			F
Approach Vol, veh/h		1893			870			34			187	
Approach Delay, s/veh		10.6			11.2			73.6			46.5	
Approach LOS		B			B			E			D	

Timer	1	2	3	4	5	6	7	8
Assigned Phs		2		4	5	6		8
Phs Duration (G+Y+Rc), s		151.5		18.5	28.2	123.3		18.5
Change Period (Y+Rc), s		5.4		5.4	5.4	5.4		5.4
Max Green Setting (Gmax), s		133.6		25.6	73.6	54.6		15.2
Max Q Clear Time (g_c+I1), s		14.9		12.4	20.6	18.5		4.1
Green Ext Time (p_c), s		25.3		0.7	2.2	18.6		0.7

Intersection Summary	
HCM 2010 Ctrl Delay	13.7
HCM 2010 LOS	B

Movement	EBL	EBT	EBR	WBL	WBT	WBR	NBL	NBT	NBR	SBL	SBT	SBR
Lane Configurations												
Traffic Volume (veh/h)	665	304	181	164	255	31	410	2641	107	85	1295	261
Future Volume (veh/h)	665	304	181	164	255	31	410	2641	107	85	1295	261
Number	5	2	12	1	6	16	3	8	18	7	4	14
Initial Q (Qb), veh	0	0	0	0	0	0	0	0	0	0	0	0
Ped-Bike Adj(A_pbT)	1.00		1.00	1.00		1.00	1.00		1.00	1.00		1.00
Parking Bus, Adj	1.00	1.00	1.00	1.00	1.00	1.00	1.00	1.00	1.00	1.00	1.00	1.00
Adj Sat Flow, veh/h/ln	1863	1863	1863	1863	1863	1900	1863	1863	1900	1863	1863	1863
Adj Flow Rate, veh/h	764	330	0	189	331	55	466	2871	141	96	1408	311
Adj No. of Lanes	2	1	1	1	2	0	2	3	0	1	3	1
Peak Hour Factor	0.87	0.92	0.71	0.79	0.84	0.56	0.88	0.92	0.76	0.89	0.92	0.84
Percent Heavy Veh, %	2	2	2	2	2	2	2	2	2	2	2	2
Cap, veh/h	818	430	365	184	323	53	519	2532	122	95	1973	614
Arrive On Green	0.23	0.23	0.00	0.10	0.10	0.10	0.15	0.51	0.51	0.03	0.39	0.39
Sat Flow, veh/h	3548	1863	1583	1774	3122	513	3442	4970	240	1774	5085	1583
Grp Volume(v), veh/h	764	330	0	189	196	190	466	1944	1068	96	1408	311
Grp Sat Flow(s),veh/h/ln	1774	1863	1583	1774	1863	1772	1721	1695	1820	1774	1695	1583
Q Serve(g_s), s	35.9	28.2	0.0	17.6	17.6	17.6	22.6	86.6	86.6	5.0	39.8	25.4
Cycle Q Clear(g_c), s	35.9	28.2	0.0	17.6	17.6	17.6	22.6	86.6	86.6	5.0	39.8	25.4
Prop In Lane	1.00		1.00	1.00		0.29	1.00		0.13	1.00		1.00
Lane Grp Cap(c), veh/h	818	430	365	184	193	183	519	1727	927	95	1973	614
V/C Ratio(X)	0.93	0.77	0.00	1.03	1.02	1.04	0.90	1.13	1.15	1.02	0.71	0.51
Avail Cap(c_a), veh/h	818	430	365	184	193	183	640	1727	927	95	1973	614
HCM Platoon Ratio	1.00	1.00	1.00	1.00	1.00	1.00	1.00	1.00	1.00	1.00	1.00	1.00
Upstream Filter(I)	1.00	1.00	0.00	1.00	1.00	1.00	1.00	1.00	1.00	1.00	1.00	1.00
Uniform Delay (d), s/veh	64.1	61.2	0.0	76.2	76.2	76.2	70.9	41.7	41.7	47.2	44.0	39.6
Incr Delay (d2), s/veh	19.0	12.4	0.0	74.2	69.2	76.0	13.5	64.7	80.8	96.8	1.2	0.7
Initial Q Delay(d3),s/veh	0.0	0.0	0.0	0.2	0.1	0.2	0.0	0.0	0.0	0.1	0.0	0.0
%ile BackOfQ(50%),veh/ln	19.8	16.0	0.0	12.4	12.8	12.5	11.7	55.8	64.1	7.2	18.9	11.3
LnGrp Delay(d),s/veh	83.1	73.6	0.0	150.6	145.6	152.3	84.4	106.4	122.5	144.2	45.3	40.3
LnGrp LOS	F	E		F	F	F	F	F	F	F	D	D
Approach Vol, veh/h		1094			575			3478			1815	
Approach Delay, s/veh		80.2			149.5			108.4			49.7	
Approach LOS		F			F			F			D	

Timer	1	2	3	4	5	6	7	8
Assigned Phs		2	3	4		6	7	8
Phs Duration (G+Y+Rc), s		44.6	31.0	71.4		23.0	10.4	92.0
Change Period (Y+Rc), s		5.4	5.4	5.4		5.4	5.4	5.4
Max Green Setting (Gmax), s		39.2	31.6	60.0		17.6	5.0	86.6
Max Q Clear Time (g_c+I1), s		37.9	24.6	41.8		19.6	7.0	88.6
Green Ext Time (p_c), s		0.7	1.0	18.0		0.0	0.0	0.0

Intersection Summary	
HCM 2010 Ctrl Delay	92.0
HCM 2010 LOS	F

Notes

User approved volume balancing among the lanes for turning movement.

Movement	EBL	EBT	EBR	WBL	WBT	WBR	NBL	NBT	NBR	SBL	SBT	SBR
Lane Configurations												
Traffic Volume (veh/h)	132	468	28	10	363	59	38	104	11	38	44	32
Future Volume (veh/h)	132	468	28	10	363	59	38	104	11	38	44	32
Number	5	2	12	1	6	16	3	8	18	7	4	14
Initial Q (Qb), veh	0	0	0	0	0	0	0	0	0	0	0	0
Ped-Bike Adj(A_pbT)	1.00		1.00	1.00		1.00	1.00		1.00	1.00		1.00
Parking Bus, Adj	1.00	1.00	1.00	1.00	1.00	1.00	1.00	1.00	1.00	1.00	1.00	1.00
Adj Sat Flow, veh/h/ln	1863	1863	1900	1863	1863	1900	1863	1863	1900	1863	1863	1900
Adj Flow Rate, veh/h	171	585	33	12	412	80	56	137	20	44	60	48
Adj No. of Lanes	1	1	0	1	1	0	1	1	0	1	1	0
Peak Hour Factor	0.77	0.80	0.84	0.83	0.88	0.74	0.68	0.76	0.55	0.86	0.73	0.67
Percent Heavy Veh, %	2	2	2	2	2	2	2	2	2	2	2	2
Cap, veh/h	414	801	45	294	588	114	288	204	30	251	116	93
Arrive On Green	0.09	0.46	0.46	0.02	0.39	0.39	0.05	0.13	0.13	0.04	0.12	0.12
Sat Flow, veh/h	1774	1747	99	1774	1516	294	1774	1590	232	1774	960	768
Grp Volume(v), veh/h	171	0	618	12	0	492	56	0	157	44	0	108
Grp Sat Flow(s),veh/h/ln	1774	0	1845	1774	0	1811	1774	0	1822	1774	0	1727
Q Serve(g_s), s	3.3	0.0	16.6	0.2	0.0	13.9	1.6	0.0	5.0	1.3	0.0	3.6
Cycle Q Clear(g_c), s	3.3	0.0	16.6	0.2	0.0	13.9	1.6	0.0	5.0	1.3	0.0	3.6
Prop In Lane	1.00		0.05	1.00		0.16	1.00		0.13	1.00		0.44
Lane Grp Cap(c), veh/h	414	0	846	294	0	703	288	0	234	251	0	209
V/C Ratio(X)	0.41	0.00	0.73	0.04	0.00	0.70	0.19	0.00	0.67	0.17	0.00	0.52
Avail Cap(c_a), veh/h	560	0	1316	419	0	1143	362	0	437	327	0	403
HCM Platoon Ratio	1.00	1.00	1.00	1.00	1.00	1.00	1.00	1.00	1.00	1.00	1.00	1.00
Upstream Filter(I)	1.00	0.00	1.00	1.00	0.00	1.00	1.00	0.00	1.00	1.00	0.00	1.00
Uniform Delay (d), s/veh	11.0	0.0	13.4	12.2	0.0	15.6	21.7	0.0	25.3	22.0	0.0	25.1
Incr Delay (d2), s/veh	0.7	0.0	1.2	0.1	0.0	1.3	0.3	0.0	3.3	0.3	0.0	2.0
Initial Q Delay(d3),s/veh	0.0	0.0	0.0	0.0	0.0	0.0	0.0	0.0	0.0	0.0	0.0	0.0
%ile BackOfQ(50%),veh/ln	1.6	0.0	8.7	0.1	0.0	7.1	0.8	0.0	2.7	0.6	0.0	1.8
LnGrp Delay(d),s/veh	11.7	0.0	14.7	12.2	0.0	16.9	22.0	0.0	28.6	22.3	0.0	27.0
LnGrp LOS	B		B	B		B	C		C	C		C
Approach Vol, veh/h		789			504			213			152	
Approach Delay, s/veh		14.0			16.8			26.9			25.6	
Approach LOS		B			B			C			C	

Timer	1	2	3	4	5	6	7	8
Assigned Phs	1	2	3	4	5	6	7	8
Phs Duration (G+Y+Rc), s	6.3	33.3	8.5	12.8	10.6	29.0	8.0	13.2
Change Period (Y+Rc), s	5.4	5.4	5.4	5.4	5.4	5.4	5.4	5.4
Max Green Setting (Gmax), s	5.2	43.4	5.6	14.2	10.2	38.4	5.2	14.6
Max Q Clear Time (g_c+I1), s	2.2	18.6	3.6	5.6	5.3	15.9	3.3	7.0
Green Ext Time (p_c), s	0.0	8.0	0.0	0.9	0.2	7.7	0.0	0.8

Intersection Summary	
HCM 2010 Ctrl Delay	17.6
HCM 2010 LOS	B

Movement	EBL	EBT	EBR	WBL	WBT	WBR	NBL	NBT	NBR	SBL	SBT	SBR
Lane Configurations												
Traffic Volume (veh/h)	126	362	57	54	206	19	85	443	72	35	231	46
Future Volume (veh/h)	126	362	57	54	206	19	85	443	72	35	231	46
Number	5	2	12	1	6	16	3	8	18	7	4	14
Initial Q (Qb), veh	0	0	0	0	0	0	0	0	0	0	0	0
Ped-Bike Adj(A_pbT)	1.00		1.00	1.00		1.00	1.00		1.00	1.00		1.00
Parking Bus, Adj	1.00	1.00	1.00	1.00	1.00	1.00	1.00	1.00	1.00	1.00	1.00	1.00
Adj Sat Flow, veh/h/ln	1863	1863	1900	1863	1863	1900	1863	1863	1900	1863	1863	1900
Adj Flow Rate, veh/h	183	398	90	72	219	42	157	482	114	44	260	78
Adj No. of Lanes	1	1	0	1	1	0	1	1	0	1	1	0
Peak Hour Factor	0.69	0.91	0.63	0.75	0.94	0.45	0.54	0.92	0.63	0.80	0.89	0.59
Percent Heavy Veh, %	2	2	2	2	2	2	2	2	2	2	2	2
Cap, veh/h	399	444	100	210	385	74	387	517	122	183	430	129
Arrive On Green	0.10	0.30	0.30	0.05	0.25	0.25	0.08	0.36	0.36	0.04	0.31	0.31
Sat Flow, veh/h	1774	1471	333	1774	1520	291	1774	1457	345	1774	1377	413
Grp Volume(v), veh/h	183	0	488	72	0	261	157	0	596	44	0	338
Grp Sat Flow(s),veh/h/ln	1774	0	1804	1774	0	1811	1774	0	1802	1774	0	1790
Q Serve(g_s), s	6.2	0.0	21.8	2.5	0.0	10.6	4.9	0.0	26.8	1.4	0.0	13.5
Cycle Q Clear(g_c), s	6.2	0.0	21.8	2.5	0.0	10.6	4.9	0.0	26.8	1.4	0.0	13.5
Prop In Lane	1.00		0.18	1.00		0.16	1.00		0.19	1.00		0.23
Lane Grp Cap(c), veh/h	399	0	544	210	0	459	387	0	640	183	0	559
V/C Ratio(X)	0.46	0.00	0.90	0.34	0.00	0.57	0.41	0.00	0.93	0.24	0.00	0.60
Avail Cap(c_a), veh/h	409	0	590	234	0	519	421	0	655	223	0	581
HCM Platoon Ratio	1.00	1.00	1.00	1.00	1.00	1.00	1.00	1.00	1.00	1.00	1.00	1.00
Upstream Filter(I)	1.00	0.00	1.00	1.00	0.00	1.00	1.00	0.00	1.00	1.00	0.00	1.00
Uniform Delay (d), s/veh	20.2	0.0	28.1	23.4	0.0	27.4	18.2	0.0	26.1	21.6	0.0	24.5
Incr Delay (d2), s/veh	0.8	0.0	15.7	1.0	0.0	1.1	0.7	0.0	20.0	0.7	0.0	1.7
Initial Q Delay(d3),s/veh	0.0	0.0	0.0	0.0	0.0	0.0	0.0	0.0	0.0	0.0	0.0	0.0
%ile BackOfQ(50%),veh/ln	3.1	0.0	13.2	1.3	0.0	5.4	2.5	0.0	16.8	0.7	0.0	6.9
LnGrp Delay(d),s/veh	21.1	0.0	43.8	24.4	0.0	28.5	18.9	0.0	46.1	22.3	0.0	26.2
LnGrp LOS	C		D	C		C	B		D	C		C
Approach Vol, veh/h		671			333			753			382	
Approach Delay, s/veh		37.6			27.6			40.4			25.8	
Approach LOS		D			C			D			C	

Timer	1	2	3	4	5	6	7	8
Assigned Phs	1	2	3	4	5	6	7	8
Phs Duration (G+Y+Rc), s	9.5	30.8	12.2	31.7	13.5	26.7	8.6	35.3
Change Period (Y+Rc), s	5.4	5.4	5.4	5.4	5.4	5.4	5.4	5.4
Max Green Setting (Gmax), s	5.2	27.5	8.4	27.3	8.6	24.1	5.1	30.6
Max Q Clear Time (g_c+I1), s	4.5	23.8	6.9	15.5	8.2	12.6	3.4	28.8
Green Ext Time (p_c), s	0.0	1.6	0.1	4.9	0.0	3.6	0.0	1.0

Intersection Summary	
HCM 2010 Ctrl Delay	34.9
HCM 2010 LOS	C

Movement	EBL	EBT	EBR	WBL	WBT	WBR	NBL	NBT	NBR	SBL	SBT	SBR
Lane Configurations												
Traffic Volume (veh/h)	391	185	13	1	134	156	29	59	8	79	28	62
Future Volume (veh/h)	391	185	13	1	134	156	29	59	8	79	28	62
Number	5	2	12	1	6	16	3	8	18	7	4	14
Initial Q (Qb), veh	0	0	0	0	0	0	0	0	0	0	0	0
Ped-Bike Adj(A_pbT)	1.00		1.00	1.00		1.00	1.00		1.00	1.00		1.00
Parking Bus, Adj	1.00	1.00	1.00	1.00	1.00	1.00	1.00	1.00	1.00	1.00	1.00	1.00
Adj Sat Flow, veh/h/ln	1863	1863	1900	1863	1863	1900	1863	1863	1900	1863	1863	1863
Adj Flow Rate, veh/h	483	240	28	4	144	205	44	72	16	90	44	95
Adj No. of Lanes	1	1	0	1	1	0	1	1	0	1	1	1
Peak Hour Factor	0.81	0.77	0.46	0.25	0.93	0.76	0.66	0.82	0.50	0.88	0.64	0.65
Percent Heavy Veh, %	2	2	2	2	2	2	2	2	2	2	2	2
Cap, veh/h	704	1066	124	782	453	646	298	232	51	276	292	248
Arrive On Green	0.65	0.65	0.65	0.65	0.65	0.65	0.16	0.16	0.16	0.16	0.16	0.16
Sat Flow, veh/h	1028	1638	191	1107	696	991	1245	1477	328	1304	1863	1583
Grp Volume(v), veh/h	483	0	268	4	0	349	44	0	88	90	44	95
Grp Sat Flow(s),veh/h/ln	1028	0	1829	1107	0	1688	1245	0	1805	1304	1863	1583
Q Serve(g_s), s	21.9	0.0	3.4	0.1	0.0	5.1	1.8	0.0	2.4	3.7	1.1	3.0
Cycle Q Clear(g_c), s	27.0	0.0	3.4	3.4	0.0	5.1	2.9	0.0	2.4	6.1	1.1	3.0
Prop In Lane	1.00		0.10	1.00		0.59	1.00		0.18	1.00		1.00
Lane Grp Cap(c), veh/h	704	0	1191	782	0	1099	298	0	283	276	292	248
V/C Ratio(X)	0.69	0.00	0.23	0.01	0.00	0.32	0.15	0.00	0.31	0.33	0.15	0.38
Avail Cap(c_a), veh/h	1234	0	2134	1353	0	1969	404	0	437	387	451	383
HCM Platoon Ratio	1.00	1.00	1.00	1.00	1.00	1.00	1.00	1.00	1.00	1.00	1.00	1.00
Upstream Filter(I)	1.00	0.00	1.00	1.00	0.00	1.00	1.00	0.00	1.00	1.00	1.00	1.00
Uniform Delay (d), s/veh	10.3	0.0	4.0	4.7	0.0	4.3	21.7	0.0	21.0	23.7	20.5	21.3
Incr Delay (d2), s/veh	1.2	0.0	0.1	0.0	0.0	0.2	0.2	0.0	0.6	0.7	0.2	1.0
Initial Q Delay(d3),s/veh	0.0	0.0	0.0	0.0	0.0	0.0	0.0	0.0	0.0	0.0	0.0	0.0
%ile BackOfQ(50%),veh/ln	6.3	0.0	1.7	0.0	0.0	2.4	0.6	0.0	1.2	1.4	0.6	1.4
LnGrp Delay(d),s/veh	11.5	0.0	4.1	4.7	0.0	4.5	22.0	0.0	21.6	24.4	20.7	22.2
LnGrp LOS	B		A	A		A	C		C	C	C	C
Approach Vol, veh/h		751			353			132			229	
Approach Delay, s/veh		8.8			4.5			21.7			22.8	
Approach LOS		A			A			C			C	

Timer	1	2	3	4	5	6	7	8
Assigned Phs		2		4		6		8
Phs Duration (G+Y+Rc), s		42.0		14.2		42.0		14.2
Change Period (Y+Rc), s		5.4		5.4		5.4		5.4
Max Green Setting (Gmax), s		65.6		13.6		65.6		13.6
Max Q Clear Time (g_c+I1), s		29.0		8.1		7.1		4.9
Green Ext Time (p_c), s		7.6		0.7		7.9		1.0

Intersection Summary	
HCM 2010 Ctrl Delay	11.1
HCM 2010 LOS	B

Movement	EBL	EBT	EBR	WBL	WBT	WBR	NBL	NBT	NBR	SBL	SBT	SBR
Lane Configurations												
Traffic Volume (veh/h)	86	71	117	57	55	11	129	833	80	16	311	40
Future Volume (veh/h)	86	71	117	57	55	11	129	833	80	16	311	40
Number	5	2	12	1	6	16	3	8	18	7	4	14
Initial Q (Qb), veh	0	0	0	0	0	0	0	0	0	0	0	0
Ped-Bike Adj(A_pbT)	1.00		1.00	1.00		1.00	1.00		1.00	1.00		1.00
Parking Bus, Adj	1.00	1.00	1.00	1.00	1.00	1.00	1.00	1.00	1.00	1.00	1.00	1.00
Adj Sat Flow, veh/h/ln	1863	1863	1900	1863	1863	1900	1863	1863	1900	1863	1863	1900
Adj Flow Rate, veh/h	126	113	167	102	100	20	150	905	123	30	349	60
Adj No. of Lanes	1	1	0	1	1	0	1	1	0	1	1	0
Peak Hour Factor	0.68	0.63	0.70	0.56	0.55	0.55	0.86	0.92	0.65	0.54	0.89	0.67
Percent Heavy Veh, %	2	2	2	2	2	2	2	2	2	2	2	2
Cap, veh/h	284	110	162	155	243	49	552	901	123	115	825	142
Arrive On Green	0.05	0.16	0.16	0.05	0.16	0.16	0.06	0.56	0.56	0.03	0.53	0.53
Sat Flow, veh/h	1774	680	1005	1774	1508	302	1774	1606	218	1774	1549	266
Grp Volume(v), veh/h	126	0	280	102	0	120	150	0	1028	30	0	409
Grp Sat Flow(s),veh/h/ln	1774	0	1685	1774	0	1810	1774	0	1824	1774	0	1816
Q Serve(g_s), s	5.4	0.0	17.4	5.2	0.0	6.4	4.1	0.0	60.6	0.8	0.0	14.7
Cycle Q Clear(g_c), s	5.4	0.0	17.4	5.2	0.0	6.4	4.1	0.0	60.6	0.8	0.0	14.7
Prop In Lane	1.00		0.60	1.00		0.17	1.00		0.12	1.00		0.15
Lane Grp Cap(c), veh/h	284	0	272	155	0	292	552	0	1024	115	0	967
V/C Ratio(X)	0.44	0.00	1.03	0.66	0.00	0.41	0.27	0.00	1.00	0.26	0.00	0.42
Avail Cap(c_a), veh/h	284	0	272	155	0	292	568	0	1024	149	0	986
HCM Platoon Ratio	1.00	1.00	1.00	1.00	1.00	1.00	1.00	1.00	1.00	1.00	1.00	1.00
Upstream Filter(I)	1.00	0.00	1.00	1.00	0.00	1.00	1.00	0.00	1.00	1.00	0.00	1.00
Uniform Delay (d), s/veh	37.4	0.0	45.3	37.0	0.0	40.7	11.2	0.0	23.7	25.9	0.0	15.2
Incr Delay (d2), s/veh	1.1	0.0	62.8	9.6	0.0	0.9	0.3	0.0	29.1	1.2	0.0	0.3
Initial Q Delay(d3),s/veh	0.0	0.0	0.0	0.0	0.0	0.0	0.0	0.0	0.0	0.0	0.0	0.0
%ile BackOfQ(50%),veh/ln	0.9	0.0	12.8	2.9	0.0	3.3	2.0	0.0	38.4	0.5	0.0	7.4
LnGrp Delay(d),s/veh	38.5	0.0	108.1	46.6	0.0	41.6	11.4	0.0	52.8	27.1	0.0	15.5
LnGrp LOS	D		F	D		D	B		F	C		B
Approach Vol, veh/h		406			222			1178			439	
Approach Delay, s/veh		86.5			43.9			47.5			16.3	
Approach LOS		F			D			D			B	

Timer	1	2	3	4	5	6	7	8
Assigned Phs	1	2	3	4	5	6	7	8
Phs Duration (G+Y+Rc), s	10.8	22.8	11.5	62.9	10.8	22.8	8.4	66.0
Change Period (Y+Rc), s	5.4	5.4	5.4	5.4	5.4	5.4	5.4	5.4
Max Green Setting (Gmax), s	5.4	17.4	7.0	58.6	5.4	17.4	5.0	60.6
Max Q Clear Time (g_c+I1), s	7.2	19.4	6.1	16.7	7.4	8.4	2.8	62.6
Green Ext Time (p_c), s	0.0	0.0	0.0	16.6	0.0	1.6	0.0	0.0

Intersection Summary	
HCM 2010 Ctrl Delay	48.1
HCM 2010 LOS	D

Movement	EBL	EBT	EBR	WBL	WBT	WBR	NBL	NBT	NBR	SBL	SBT	SBR
Lane Configurations												
Traffic Volume (veh/h)	110	1630	70	30	770	60	0	0	110	40	30	40
Future Volume (veh/h)	110	1630	70	30	770	60	0	0	110	40	30	40
Number	5	2	12	1	6	16	3	8	18	7	4	14
Initial Q (Qb), veh	0	0	0	0	0	0	0	0	0	0	0	0
Ped-Bike Adj(A_pbT)	1.00		1.00	1.00		1.00	1.00		1.00	1.00		1.00
Parking Bus, Adj	1.00	1.00	1.00	1.00	1.00	1.00	1.00	1.00	1.00	1.00	1.00	1.00
Adj Sat Flow, veh/h/ln	1863	1863	1900	1863	1863	1900	0	1863	1900	1900	1863	1863
Adj Flow Rate, veh/h	120	1772	76	33	837	65	0	0	120	43	33	43
Adj No. of Lanes	1	2	0	1	2	0	0	1	0	0	1	1
Peak Hour Factor	0.92	0.92	0.92	0.92	0.92	0.92	0.92	0.92	0.92	0.92	0.92	0.92
Percent Heavy Veh, %	2	2	2	2	2	2	0	2	2	2	2	2
Cap, veh/h	503	2802	119	229	2493	194	0	0	200	79	52	200
Arrive On Green	0.06	1.00	1.00	0.75	0.75	0.75	0.00	0.00	0.13	0.13	0.13	0.13
Sat Flow, veh/h	1774	3459	147	249	3328	258	0	0	1583	360	409	1583
Grp Volume(v), veh/h	120	902	946	33	445	457	0	0	120	76	0	43
Grp Sat Flow(s),veh/h/ln	1774	1770	1837	249	1770	1817	0	0	1583	770	0	1583
Q Serve(g_s), s	2.7	0.0	0.0	6.5	14.3	14.3	0.0	0.0	12.2	6.7	0.0	4.1
Cycle Q Clear(g_c), s	2.7	0.0	0.0	6.5	14.3	14.3	0.0	0.0	12.2	18.9	0.0	4.1
Prop In Lane	1.00		0.08	1.00		0.14	0.00		1.00	0.57		1.00
Lane Grp Cap(c), veh/h	503	1434	1488	229	1326	1361	0	0	200	130	0	200
V/C Ratio(X)	0.24	0.63	0.64	0.14	0.34	0.34	0.00	0.00	0.60	0.58	0.00	0.22
Avail Cap(c_a), veh/h	583	1434	1488	229	1326	1361	0	0	248	175	0	248
HCM Platoon Ratio	2.00	2.00	2.00	1.00	1.00	1.00	1.00	1.00	1.00	1.00	1.00	1.00
Upstream Filter(I)	0.55	0.55	0.55	0.84	0.84	0.84	0.00	0.00	1.00	1.00	0.00	1.00
Uniform Delay (d), s/veh	4.8	0.0	0.0	6.2	7.1	7.1	0.0	0.0	70.2	75.9	0.0	66.7
Incr Delay (d2), s/veh	0.1	1.2	1.2	1.1	0.6	0.6	0.0	0.0	2.9	4.1	0.0	0.5
Initial Q Delay(d3),s/veh	0.0	0.0	0.0	0.0	0.0	0.0	0.0	0.0	0.0	0.0	0.0	0.0
%ile BackOfQ(50%),veh/ln	1.3	0.5	0.5	0.5	7.1	7.3	0.0	0.0	5.5	3.7	0.0	3.8
LnGrp Delay(d),s/veh	5.0	1.2	1.2	7.3	7.7	7.7	0.0	0.0	73.1	80.0	0.0	67.2
LnGrp LOS	A	A	A	A	A	A			E	E		E
Approach Vol, veh/h		1968			935			120			119	
Approach Delay, s/veh		1.4			7.7			73.1			75.4	
Approach LOS		A			A			E			E	

Timer	1	2	3	4	5	6	7	8
Assigned Phs		2		4	5	6		8
Phs Duration (G+Y+Rc), s		143.1		26.9	10.4	132.7		26.9
Change Period (Y+Rc), s		5.4		5.4	5.4	5.4		5.4
Max Green Setting (Gmax), s		132.6		26.6	12.6	114.6		26.6
Max Q Clear Time (g_c+I1), s		2.0		20.9	4.7	16.3		14.2
Green Ext Time (p_c), s		58.9		0.6	0.2	52.4		1.0

Intersection Summary	
HCM 2010 Ctrl Delay	8.8
HCM 2010 LOS	A

Movement	EBL	EBT	EBR	WBL	WBT	WBR	NBL	NBT	NBR	SBL	SBT	SBR
Lane Configurations												
Traffic Volume (veh/h)	130	1450	130	10	750	50	160	50	240	120	20	80
Future Volume (veh/h)	130	1450	130	10	750	50	160	50	240	120	20	80
Number	5	2	12	1	6	16	3	8	18	7	4	14
Initial Q (Qb), veh	0	0	0	0	0	0	0	0	0	0	0	0
Ped-Bike Adj(A_pbT)	1.00		1.00	1.00		1.00	1.00		1.00	1.00		1.00
Parking Bus, Adj	1.00	1.00	1.00	1.00	1.00	1.00	1.00	1.00	1.00	1.00	1.00	1.00
Adj Sat Flow, veh/h/ln	1863	1863	1900	1863	1863	1900	1863	1863	1863	1863	1863	1863
Adj Flow Rate, veh/h	141	1576	141	11	815	54	174	54	261	130	22	87
Adj No. of Lanes	1	2	0	1	2	0	1	1	1	1	1	1
Peak Hour Factor	0.92	0.92	0.92	0.92	0.92	0.92	0.92	0.92	0.92	0.92	0.92	0.92
Percent Heavy Veh, %	2	2	2	2	2	2	2	2	2	2	2	2
Cap, veh/h	486	2373	210	163	2354	156	258	108	110	219	64	109
Arrive On Green	0.02	0.48	0.48	0.01	0.70	0.70	0.11	0.06	0.06	0.08	0.03	0.03
Sat Flow, veh/h	1774	3289	292	1774	3370	223	1774	1863	1583	1774	1863	1583
Grp Volume(v), veh/h	141	842	875	11	428	441	174	54	261	130	22	87
Grp Sat Flow(s),veh/h/ln	1774	1770	1811	1774	1770	1823	1774	1863	1583	1774	1863	1583
Q Serve(g_s), s	3.8	61.3	62.8	0.3	16.3	16.3	15.8	4.8	9.8	11.9	2.0	5.8
Cycle Q Clear(g_c), s	3.8	61.3	62.8	0.3	16.3	16.3	15.8	4.8	9.8	11.9	2.0	5.8
Prop In Lane	1.00		0.16	1.00		0.12	1.00		1.00	1.00		1.00
Lane Grp Cap(c), veh/h	486	1277	1307	163	1236	1274	258	108	110	219	64	109
V/C Ratio(X)	0.29	0.66	0.67	0.07	0.35	0.35	0.67	0.50	2.37	0.59	0.35	0.80
Avail Cap(c_a), veh/h	531	1277	1307	399	1236	1274	276	108	110	237	64	109
HCM Platoon Ratio	0.67	0.67	0.67	1.00	1.00	1.00	1.00	1.00	1.00	1.00	1.00	1.00
Upstream Filter(I)	0.76	0.76	0.76	0.95	0.95	0.95	1.00	1.00	1.00	1.00	1.00	1.00
Uniform Delay (d), s/veh	7.6	28.1	28.4	17.8	10.2	10.2	69.2	77.7	79.1	71.7	80.2	78.0
Incr Delay (d2), s/veh	0.2	2.0	2.1	0.2	0.7	0.7	5.8	3.7	642.4	3.5	3.2	32.5
Initial Q Delay(d3),s/veh	0.0	0.0	0.0	0.0	0.0	0.0	0.0	0.0	0.0	0.0	0.0	0.0
%ile BackOfQ(50%),veh/ln	1.9	30.8	32.2	0.2	8.2	8.5	8.2	2.6	24.9	6.0	1.1	5.0
LnGrp Delay(d),s/veh	7.8	30.1	30.5	17.9	10.9	10.9	75.1	81.4	721.4	75.2	83.5	110.5
LnGrp LOS	A	C	C	B	B	B	E	F	F	E	F	F
Approach Vol, veh/h		1858			880			489			239	
Approach Delay, s/veh		28.6			11.0			420.8			88.8	
Approach LOS		C			B			F			F	

Timer	1	2	3	4	5	6	7	8
Assigned Phs	1	2	3	4	5	6	7	8
Phs Duration (G+Y+Rc), s	7.4	128.1	23.3	11.2	11.3	124.2	19.3	15.2
Change Period (Y+Rc), s	5.4	5.4	5.4	5.4	5.4	5.4	5.4	5.4
Max Green Setting (Gmax), s	24.6	98.4	19.6	5.8	10.2	112.8	15.6	9.8
Max Q Clear Time (g_c+I1), s	2.3	64.8	17.8	7.8	5.8	18.3	13.9	11.8
Green Ext Time (p_c), s	0.0	23.6	0.1	0.0	0.1	41.1	0.0	0.0

Intersection Summary	
HCM 2010 Ctrl Delay	83.6
HCM 2010 LOS	F

Movement	EBL	EBT	WBT	WBR	SBL	SBR
Lane Configurations						
Traffic Volume (veh/h)	140	2610	2170	240	340	20
Future Volume (veh/h)	140	2610	2170	240	340	20
Number	5	2	6	16	7	14
Initial Q (Qb), veh	0	0	0	0	0	0
Ped-Bike Adj(A_pbT)	1.00			1.00	1.00	1.00
Parking Bus, Adj	1.00	1.00	1.00	1.00	1.00	1.00
Adj Sat Flow, veh/h/ln	1863	1863	1863	1900	1863	1863
Adj Flow Rate, veh/h	152	2837	2359	261	370	22
Adj No. of Lanes	1	3	3	0	2	1
Peak Hour Factor	0.92	0.92	0.92	0.92	0.92	0.92
Percent Heavy Veh, %	2	2	2	2	2	2
Cap, veh/h	172	4141	3446	373	421	194
Arrive On Green	0.09	1.00	0.74	0.74	0.12	0.12
Sat Flow, veh/h	1774	5253	4827	504	3442	1583
Grp Volume(v), veh/h	152	2837	1702	918	370	22
Grp Sat Flow(s),veh/h/ln	1774	1695	1695	1774	1721	1583
Q Serve(g_s), s	5.0	0.0	44.6	47.5	18.0	2.1
Cycle Q Clear(g_c), s	5.0	0.0	44.6	47.5	18.0	2.1
Prop In Lane	1.00			0.28	1.00	1.00
Lane Grp Cap(c), veh/h	172	4141	2507	1312	421	194
V/C Ratio(X)	0.88	0.69	0.68	0.70	0.88	0.11
Avail Cap(c_a), veh/h	313	4141	2507	1312	539	248
HCM Platoon Ratio	2.00	2.00	1.00	1.00	1.00	1.00
Upstream Filter(I)	0.64	0.64	0.09	0.09	1.00	1.00
Uniform Delay (d), s/veh	39.3	0.0	11.6	12.0	73.4	66.4
Incr Delay (d2), s/veh	9.4	0.6	0.1	0.3	12.8	0.3
Initial Q Delay(d3),s/veh	0.0	0.0	0.0	0.0	0.0	0.0
%ile BackOfQ(50%),veh/ln	7.4	0.2	20.6	23.1	9.3	2.0
LnGrp Delay(d),s/veh	48.7	0.6	11.7	12.2	86.2	66.7
LnGrp LOS	D	A	B	B	F	E
Approach Vol, veh/h		2989	2620		392	
Approach Delay, s/veh		3.0	11.9		85.1	
Approach LOS		A	B		F	

Timer	1	2	3	4	5	6	7	8
Assigned Phs		2		4	5	6		
Phs Duration (G+Y+Rc), s		143.8		26.2	12.7	131.1		
Change Period (Y+Rc), s		5.4		5.4	5.4	5.4		
Max Green Setting (Gmax), s		132.6		26.6	20.8	106.4		
Max Q Clear Time (g_c+I1), s		2.0		20.0	7.0	49.5		
Green Ext Time (p_c), s		128.2		0.8	0.3	56.4		

Intersection Summary	
HCM 2010 Ctrl Delay	12.3
HCM 2010 LOS	B

Movement	EBT	EBR	WBL	WBT	NBL	NBR
Lane Configurations						
Traffic Volume (veh/h)	2510	130	110	2120	10	110
Future Volume (veh/h)	2510	130	110	2120	10	110
Number	2	12	1	6	3	18
Initial Q (Qb), veh	0	0	0	0	0	0
Ped-Bike Adj(A_pbT)		1.00	1.00		1.00	1.00
Parking Bus, Adj	1.00	1.00	1.00	1.00	1.00	1.00
Adj Sat Flow, veh/h/ln	1863	1900	1863	1863	1863	1863
Adj Flow Rate, veh/h	2728	141	120	2304	11	120
Adj No. of Lanes	3	0	1	3	1	2
Peak Hour Factor	0.92	0.92	0.92	0.92	0.92	0.92
Percent Heavy Veh, %	2	2	2	2	2	2
Cap, veh/h	4069	207	168	4485	97	152
Arrive On Green	1.00	1.00	0.03	0.88	0.05	0.05
Sat Flow, veh/h	5124	252	1774	5253	1774	2787
Grp Volume(v), veh/h	1853	1016	120	2304	11	120
Grp Sat Flow(s),veh/h/ln	1695	1818	1774	1695	1774	1393
Q Serve(g_s), s	0.0	0.0	1.7	16.6	1.0	7.2
Cycle Q Clear(g_c), s	0.0	0.0	1.7	16.6	1.0	7.2
Prop In Lane		0.14	1.00		1.00	1.00
Lane Grp Cap(c), veh/h	2783	1493	168	4485	97	152
V/C Ratio(X)	0.67	0.68	0.71	0.51	0.11	0.79
Avail Cap(c_a), veh/h	2783	1493	321	4485	111	174
HCM Platoon Ratio	2.00	2.00	1.00	1.00	1.00	1.00
Upstream Filter(I)	0.39	0.39	0.56	0.56	1.00	1.00
Uniform Delay (d), s/veh	0.0	0.0	17.6	2.2	76.5	79.4
Incr Delay (d2), s/veh	0.5	1.0	3.2	0.2	0.5	19.1
Initial Q Delay(d3),s/veh	0.0	0.0	0.0	0.0	0.0	0.0
%ile BackOfQ(50%),veh/ln	0.2	0.4	4.8	7.6	0.5	3.2
LnGrp Delay(d),s/veh	0.5	1.0	20.8	2.4	77.0	98.5
LnGrp LOS	A	A	C	A	E	F
Approach Vol, veh/h	2869			2424	131	
Approach Delay, s/veh	0.7			3.3	96.7	
Approach LOS	A			A	F	

Timer	1	2	3	4	5	6	7	8
Assigned Phs	1	2				6		8
Phs Duration (G+Y+Rc), s	10.4	145.0				155.3		14.7
Change Period (Y+Rc), s	5.4	5.4				5.4		5.4
Max Green Setting (Gmax), s	19.6	123.6				148.6		10.6
Max Q Clear Time (g_c+I1), s	3.7	2.0				18.6		9.2
Green Ext Time (p_c), s	0.2	118.1				126.0		0.0

Intersection Summary	
HCM 2010 Ctrl Delay	4.2
HCM 2010 LOS	A

HCM 2010 analysis supports speed limit in the range of 25 and 55 mph

Movement	EBL	EBT	WBT	WBR	SBL	SBR
Lane Configurations						
Traffic Volume (veh/h)	110	2050	1680	90	110	10
Future Volume (veh/h)	110	2050	1680	90	110	10
Number	5	2	6	16	7	14
Initial Q (Qb), veh	0	0	0	0	0	0
Ped-Bike Adj(A_pbT)	1.00			1.00	1.00	1.00
Parking Bus, Adj	1.00	1.00	1.00	1.00	1.00	1.00
Adj Sat Flow, veh/h/ln	1863	1863	1863	1900	1863	1863
Adj Flow Rate, veh/h	120	2228	1826	98	120	11
Adj No. of Lanes	1	3	3	0	1	1
Peak Hour Factor	0.92	0.92	0.92	0.92	0.92	0.92
Percent Heavy Veh, %	2	2	2	2	2	2
Cap, veh/h	250	4356	3931	211	142	127
Arrive On Green	0.03	0.86	0.80	0.80	0.08	0.08
Sat Flow, veh/h	1774	5253	5109	265	1774	1583
Grp Volume(v), veh/h	120	2228	1252	672	120	11
Grp Sat Flow(s),veh/h/ln	1774	1695	1695	1816	1774	1583
Q Serve(g_s), s	2.0	19.0	20.4	20.4	11.3	1.1
Cycle Q Clear(g_c), s	2.0	19.0	20.4	20.4	11.3	1.1
Prop In Lane	1.00			0.15	1.00	1.00
Lane Grp Cap(c), veh/h	250	4356	2697	1445	142	127
V/C Ratio(X)	0.48	0.51	0.46	0.47	0.85	0.09
Avail Cap(c_a), veh/h	424	4356	2697	1445	288	257
HCM Platoon Ratio	1.00	1.00	1.00	1.00	1.00	1.00
Upstream Filter(I)	1.00	1.00	0.83	0.83	1.00	1.00
Uniform Delay (d), s/veh	5.5	3.1	5.6	5.6	77.2	72.5
Incr Delay (d2), s/veh	1.4	0.4	0.1	0.2	12.8	0.3
Initial Q Delay(d3),s/veh	0.0	0.0	0.0	0.0	0.0	0.0
%ile BackOfQ(50%),veh/ln	1.6	8.8	9.4	10.2	6.1	1.0
LnGrp Delay(d),s/veh	6.9	3.5	5.7	5.8	89.9	72.8
LnGrp LOS	A	A	A	A	F	E
Approach Vol, veh/h		2348	1924		131	
Approach Delay, s/veh		3.7	5.8		88.5	
Approach LOS		A	A		F	

Timer	1	2	3	4	5	6	7	8
Assigned Phs		2		4	5	6		
Phs Duration (G+Y+Rc), s		151.0		19.0	10.4	140.6		
Change Period (Y+Rc), s		5.4		5.4	5.4	5.4		
Max Green Setting (Gmax), s		131.6		27.6	21.6	104.6		
Max Q Clear Time (g_c+I1), s		21.0		13.3	4.0	22.4		
Green Ext Time (p_c), s		96.7		0.3	0.2	74.3		

Intersection Summary	
HCM 2010 Ctrl Delay	7.1
HCM 2010 LOS	A

Movement	EBL	EBT	EBR	WBL	WBT	WBR	NBL	NBT	NBR	SBL	SBT	SBR
Lane Configurations												
Traffic Volume (veh/h)	40	1450	40	20	820	20	20	0	100	90	0	40
Future Volume (veh/h)	40	1450	40	20	820	20	20	0	100	90	0	40
Number	5	2	12	1	6	16	3	8	18	7	4	14
Initial Q (Qb), veh	0	0	0	0	0	0	0	0	0	0	0	0
Ped-Bike Adj(A_pbT)	1.00		1.00	1.00		1.00	1.00		1.00	1.00		1.00
Parking Bus, Adj	1.00	1.00	1.00	1.00	1.00	1.00	1.00	1.00	1.00	1.00	1.00	1.00
Adj Sat Flow, veh/h/ln	1863	1863	1900	1863	1863	1900	1900	1863	1900	1900	1863	1863
Adj Flow Rate, veh/h	43	1576	43	22	891	22	22	0	109	98	0	43
Adj No. of Lanes	1	2	0	1	2	0	0	2	0	0	1	1
Peak Hour Factor	0.92	0.92	0.92	0.92	0.92	0.92	0.92	0.92	0.92	0.92	0.92	0.92
Percent Heavy Veh, %	2	2	2	2	2	2	2	2	2	2	2	2
Cap, veh/h	459	2515	68	296	2499	62	82	0	247	175	0	271
Arrive On Green	0.05	1.00	1.00	0.02	0.71	0.71	0.17	0.00	0.17	0.17	0.00	0.17
Sat Flow, veh/h	1774	3520	96	1774	3530	87	231	0	1441	773	0	1583
Grp Volume(v), veh/h	43	791	828	22	447	466	22	0	109	98	0	43
Grp Sat Flow(s),veh/h/ln	1774	1770	1846	1774	1770	1847	231	0	1441	773	0	1583
Q Serve(g_s), s	1.1	0.0	0.0	0.6	16.8	16.8	2.7	0.0	11.5	12.6	0.0	3.9
Cycle Q Clear(g_c), s	1.1	0.0	0.0	0.6	16.8	16.8	26.9	0.0	11.5	24.2	0.0	3.9
Prop In Lane	1.00		0.05	1.00		0.05	1.00		1.00	1.00		1.00
Lane Grp Cap(c), veh/h	459	1264	1319	296	1253	1308	82	0	247	175	0	271
V/C Ratio(X)	0.09	0.63	0.63	0.07	0.36	0.36	0.27	0.00	0.44	0.56	0.00	0.16
Avail Cap(c_a), veh/h	482	1264	1319	331	1253	1308	94	0	259	186	0	285
HCM Platoon Ratio	2.00	2.00	2.00	1.00	1.00	1.00	1.00	1.00	1.00	1.00	1.00	1.00
Upstream Filter(I)	0.72	0.72	0.72	0.27	0.27	0.27	1.00	0.00	1.00	1.00	0.00	1.00
Uniform Delay (d), s/veh	6.9	0.0	0.0	6.4	9.7	9.7	81.4	0.0	63.2	74.0	0.0	60.0
Incr Delay (d2), s/veh	0.1	1.7	1.6	0.0	0.2	0.2	1.7	0.0	1.2	3.4	0.0	0.3
Initial Q Delay(d3),s/veh	0.0	0.0	0.0	0.0	0.0	0.0	0.0	0.0	0.0	0.0	0.0	0.0
%ile BackOfQ(50%),veh/ln	0.5	0.6	0.6	0.3	8.3	8.6	1.1	0.0	4.7	4.7	0.0	1.7
LnGrp Delay(d),s/veh	7.0	1.7	1.6	6.4	9.9	9.9	83.2	0.0	64.4	77.4	0.0	60.3
LnGrp LOS	A	A	A	A	A	A	F		E	E		E
Approach Vol, veh/h		1662			935			131			141	
Approach Delay, s/veh		1.8			9.8			67.6			72.1	
Approach LOS		A			A			E			E	

Timer	1	2	3	4	5	6	7	8
Assigned Phs	1	2		4	5	6		8
Phs Duration (G+Y+Rc), s	8.6	126.9		34.5	9.7	125.7		34.5
Change Period (Y+Rc), s	5.4	5.4		5.4	5.4	5.4		5.4
Max Green Setting (Gmax), s	6.6	116.6		30.6	6.6	116.6		30.6
Max Q Clear Time (g_c+I1), s	2.6	2.0		26.2	3.1	18.8		28.9
Green Ext Time (p_c), s	0.0	42.6		0.6	0.0	40.7		0.2

Intersection Summary	
HCM 2010 Ctrl Delay	10.9
HCM 2010 LOS	B

Movement	EBL	EBT	EBR	WBL	WBT	WBR	NBL	NBT	NBR	SBL	SBT	SBR
Lane Configurations												
Traffic Volume (veh/h)	30	1200	30	70	780	70	30	90	130	130	90	30
Future Volume (veh/h)	30	1200	30	70	780	70	30	90	130	130	90	30
Number	5	2	12	1	6	16	3	8	18	7	4	14
Initial Q (Qb), veh	0	0	0	0	0	0	0	0	0	0	0	0
Ped-Bike Adj(A_pbT)	1.00		1.00	1.00		1.00	1.00		1.00	1.00		1.00
Parking Bus, Adj	1.00	1.00	1.00	1.00	1.00	1.00	1.00	1.00	1.00	1.00	1.00	1.00
Adj Sat Flow, veh/h/ln	1863	1863	1900	1863	1863	1900	1863	1863	1900	1863	1863	1900
Adj Flow Rate, veh/h	33	1304	33	76	848	76	33	98	141	141	98	33
Adj No. of Lanes	1	2	0	1	2	0	1	1	0	1	1	0
Peak Hour Factor	0.92	0.92	0.92	0.92	0.92	0.92	0.92	0.92	0.92	0.92	0.92	0.92
Percent Heavy Veh, %	2	2	2	2	2	2	2	2	2	2	2	2
Cap, veh/h	372	2144	54	341	2015	181	273	110	158	203	284	96
Arrive On Green	0.05	1.00	1.00	0.03	0.61	0.61	0.02	0.16	0.16	0.08	0.21	0.21
Sat Flow, veh/h	1774	3527	89	1774	3286	294	1774	692	995	1774	1334	449
Grp Volume(v), veh/h	33	654	683	76	457	467	33	0	239	141	0	131
Grp Sat Flow(s),veh/h/ln	1774	1770	1847	1774	1770	1811	1774	0	1687	1774	0	1783
Q Serve(g_s), s	1.2	0.0	0.0	2.8	22.9	22.9	2.6	0.0	23.6	11.0	0.0	10.6
Cycle Q Clear(g_c), s	1.2	0.0	0.0	2.8	22.9	22.9	2.6	0.0	23.6	11.0	0.0	10.6
Prop In Lane	1.00		0.05	1.00		0.16	1.00		0.59	1.00		0.25
Lane Grp Cap(c), veh/h	372	1076	1123	341	1085	1111	273	0	269	203	0	380
V/C Ratio(X)	0.09	0.61	0.61	0.22	0.42	0.42	0.12	0.00	0.89	0.70	0.00	0.34
Avail Cap(c_a), veh/h	389	1076	1123	404	1085	1111	290	0	343	239	0	478
HCM Platoon Ratio	2.00	2.00	2.00	1.00	1.00	1.00	1.00	1.00	1.00	1.00	1.00	1.00
Upstream Filter(I)	0.87	0.87	0.87	0.95	0.95	0.95	1.00	0.00	1.00	1.00	0.00	1.00
Uniform Delay (d), s/veh	13.0	0.0	0.0	11.7	17.1	17.1	57.9	0.0	70.0	54.4	0.0	56.8
Incr Delay (d2), s/veh	0.1	2.2	2.1	0.3	1.1	1.1	0.2	0.0	20.1	6.9	0.0	0.5
Initial Q Delay(d3),s/veh	0.0	0.0	0.0	0.0	0.0	0.0	0.0	0.0	0.0	0.0	0.0	0.0
%ile BackOfQ(50%),veh/ln	0.6	0.7	0.7	1.4	11.5	11.8	1.3	0.0	12.5	5.8	0.0	5.3
LnGrp Delay(d),s/veh	13.1	2.2	2.1	12.0	18.3	18.2	58.1	0.0	90.2	61.3	0.0	57.3
LnGrp LOS	B	A	A	B	B	B	E		F	E		E
Approach Vol, veh/h		1370			1000			272			272	
Approach Delay, s/veh		2.4			17.8			86.3			59.4	
Approach LOS		A			B			F			E	

Timer	1	2	3	4	5	6	7	8
Assigned Phs	1	2	3	4	5	6	7	8
Phs Duration (G+Y+Rc), s	10.3	108.7	9.3	41.6	9.3	109.7	18.5	32.5
Change Period (Y+Rc), s	5.4	5.4	5.4	5.4	5.4	5.4	5.4	5.4
Max Green Setting (Gmax), s	10.9	86.3	5.6	45.6	5.6	91.6	16.6	34.6
Max Q Clear Time (g_c+I1), s	4.8	2.0	4.6	12.6	3.2	24.9	13.0	25.6
Green Ext Time (p_c), s	0.1	29.3	0.0	2.5	0.0	27.5	0.1	1.5

Intersection Summary	
HCM 2010 Ctrl Delay	20.9
HCM 2010 LOS	C

Movement	EBT	EBR	WBL	WBT	NBL	NBR
Lane Configurations						
Traffic Volume (veh/h)	940	50	90	790	110	260
Future Volume (veh/h)	940	50	90	790	110	260
Number	2	12	1	6	3	18
Initial Q (Qb), veh	0	0	0	0	0	0
Ped-Bike Adj(A_pbT)		1.00	1.00		1.00	1.00
Parking Bus, Adj	1.00	1.00	1.00	1.00	1.00	1.00
Adj Sat Flow, veh/h/ln	1863	1900	1863	1863	1863	1863
Adj Flow Rate, veh/h	1022	54	98	859	120	283
Adj No. of Lanes	2	0	1	2	1	1
Peak Hour Factor	0.92	0.92	0.92	0.92	0.92	0.92
Percent Heavy Veh, %	2	2	2	2	2	2
Cap, veh/h	2419	128	398	2719	298	312
Arrive On Green	0.71	0.71	0.03	0.77	0.17	0.17
Sat Flow, veh/h	3513	181	1774	3632	1774	1583
Grp Volume(v), veh/h	529	547	98	859	120	283
Grp Sat Flow(s),veh/h/ln	1770	1831	1774	1770	1774	1583
Q Serve(g_s), s	21.2	21.2	2.5	12.6	10.3	28.6
Cycle Q Clear(g_c), s	21.2	21.2	2.5	12.6	10.3	28.6
Prop In Lane		0.10	1.00		1.00	1.00
Lane Grp Cap(c), veh/h	1252	1295	398	2719	298	312
V/C Ratio(X)	0.42	0.42	0.25	0.32	0.40	0.91
Avail Cap(c_a), veh/h	1252	1295	718	2719	298	312
HCM Platoon Ratio	1.00	1.00	1.00	1.00	1.00	1.00
Upstream Filter(I)	1.00	1.00	0.91	0.91	1.00	1.00
Uniform Delay (d), s/veh	10.4	10.4	7.7	6.0	63.1	66.7
Incr Delay (d2), s/veh	1.0	1.0	0.3	0.1	0.9	28.3
Initial Q Delay(d3),s/veh	0.0	0.0	0.0	0.0	0.0	0.0
%ile BackOfQ(50%),veh/ln	10.6	11.0	1.2	6.1	5.1	15.5
LnGrp Delay(d),s/veh	11.4	11.4	7.9	6.1	63.9	95.0
LnGrp LOS	B	B	A	A	E	F
Approach Vol, veh/h	1076			957	403	
Approach Delay, s/veh	11.4			6.3	85.7	
Approach LOS	B			A	F	

Timer	1	2	3	4	5	6	7	8
Assigned Phs	1	2				6		8
Phs Duration (G+Y+Rc), s	10.4	125.6				136.0		34.0
Change Period (Y+Rc), s	5.4	5.4				5.4		5.4
Max Green Setting (Gmax), s	35.6	89.6				130.6		28.6
Max Q Clear Time (g_c+I1), s	4.5	23.2				14.6		30.6
Green Ext Time (p_c), s	0.2	21.3				22.8		0.0

Intersection Summary	
HCM 2010 Ctrl Delay	21.7
HCM 2010 LOS	C

Movement	EBL	EBT	EBR	WBL	WBT	WBR	NBL	NBT	NBR	SBL	SBT	SBR
Lane Configurations												
Traffic Volume (veh/h)	50	590	50	50	850	50	90	150	130	220	110	40
Future Volume (veh/h)	50	590	50	50	850	50	90	150	130	220	110	40
Number	5	2	12	1	6	16	3	8	18	7	4	14
Initial Q (Qb), veh	0	0	0	0	0	0	0	0	0	0	0	0
Ped-Bike Adj(A_pbT)	1.00		1.00	1.00		1.00	1.00		1.00	1.00		1.00
Parking Bus, Adj	1.00	1.00	1.00	1.00	1.00	1.00	1.00	1.00	1.00	1.00	1.00	1.00
Adj Sat Flow, veh/h/ln	1863	1863	1900	1863	1863	1900	1863	1863	1900	1863	1863	1900
Adj Flow Rate, veh/h	54	641	54	54	924	54	98	163	141	239	120	43
Adj No. of Lanes	1	1	0	1	1	0	1	1	0	1	1	0
Peak Hour Factor	0.92	0.92	0.92	0.92	0.92	0.92	0.92	0.92	0.92	0.92	0.92	0.92
Percent Heavy Veh, %	2	2	2	2	2	2	2	2	2	2	2	2
Cap, veh/h	119	953	80	301	980	57	383	293	254	264	416	149
Arrive On Green	0.56	0.56	0.56	0.56	0.56	0.56	0.32	0.32	0.32	0.32	0.32	0.32
Sat Flow, veh/h	573	1695	143	747	1743	102	1218	923	799	1071	1310	470
Grp Volume(v), veh/h	54	0	695	54	0	978	98	0	304	239	0	163
Grp Sat Flow(s),veh/h/ln	573	0	1838	747	0	1845	1218	0	1722	1071	0	1780
Q Serve(g_s), s	6.1	0.0	24.0	4.9	0.0	44.5	5.9	0.0	13.2	15.4	0.0	6.2
Cycle Q Clear(g_c), s	50.6	0.0	24.0	28.9	0.0	44.5	12.1	0.0	13.2	28.6	0.0	6.2
Prop In Lane	1.00		0.08	1.00		0.06	1.00		0.46	1.00		0.26
Lane Grp Cap(c), veh/h	119	0	1033	301	0	1037	383	0	547	264	0	566
V/C Ratio(X)	0.45	0.00	0.67	0.18	0.00	0.94	0.26	0.00	0.56	0.91	0.00	0.29
Avail Cap(c_a), veh/h	119	0	1033	301	0	1037	383	0	547	264	0	566
HCM Platoon Ratio	1.00	1.00	1.00	1.00	1.00	1.00	1.00	1.00	1.00	1.00	1.00	1.00
Upstream Filter(I)	1.00	0.00	1.00	1.00	0.00	1.00	1.00	0.00	1.00	1.00	0.00	1.00
Uniform Delay (d), s/veh	42.8	0.0	13.9	24.0	0.0	18.4	27.6	0.0	25.4	39.1	0.0	23.1
Incr Delay (d2), s/veh	2.7	0.0	1.7	0.3	0.0	16.1	0.3	0.0	1.2	32.0	0.0	0.3
Initial Q Delay(d3),s/veh	0.0	0.0	0.0	0.0	0.0	0.0	0.0	0.0	0.0	0.0	0.0	0.0
%ile BackOfQ(50%),veh/ln	1.4	0.0	12.5	1.0	0.0	26.9	2.0	0.0	6.4	8.3	0.0	3.1
LnGrp Delay(d),s/veh	45.5	0.0	15.6	24.3	0.0	34.4	27.9	0.0	26.7	71.1	0.0	23.3
LnGrp LOS	D		B	C		C	C		C	E		C
Approach Vol, veh/h		749			1032			402			402	
Approach Delay, s/veh		17.7			33.9			27.0			51.7	
Approach LOS		B			C			C			D	

Timer	1	2	3	4	5	6	7	8
Assigned Phs		2		4		6		8
Phs Duration (G+Y+Rc), s		56.0		34.0		56.0		34.0
Change Period (Y+Rc), s		5.4		5.4		5.4		5.4
Max Green Setting (Gmax), s		50.6		28.6		50.6		28.6
Max Q Clear Time (g_c+I1), s		52.6		30.6		46.5		15.2
Green Ext Time (p_c), s		0.0		0.0		3.5		3.7

Intersection Summary	
HCM 2010 Ctrl Delay	30.9
HCM 2010 LOS	C

Movement	EBL	EBT	EBR	WBL	WBT	WBR	NBL	NBT	NBR	SBL	SBT	SBR
Lane Configurations												
Traffic Volume (veh/h)	38	171	143	92	215	377	107	525	87	433	901	35
Future Volume (veh/h)	38	171	143	92	215	377	107	525	87	433	901	35
Number	5	2	12	1	6	16	3	8	18	7	4	14
Initial Q (Qb), veh	0	0	0	0	0	0	0	0	0	0	0	0
Ped-Bike Adj(A_pbT)	1.00		1.00	1.00		1.00	1.00		1.00	1.00		1.00
Parking Bus, Adj	1.00	1.00	1.00	1.00	1.00	1.00	1.00	1.00	1.00	1.00	1.00	1.00
Adj Sat Flow, veh/h/ln	1863	1863	1900	1863	1863	1863	1863	1863	1900	1863	1863	1900
Adj Flow Rate, veh/h	44	192	174	131	239	433	134	640	114	466	990	40
Adj No. of Lanes	1	1	0	1	1	1	1	2	0	1	2	0
Peak Hour Factor	0.86	0.89	0.82	0.70	0.90	0.87	0.80	0.82	0.76	0.93	0.91	0.88
Percent Heavy Veh, %	2	2	2	2	2	2	2	2	2	2	2	2
Cap, veh/h	263	210	190	221	483	410	290	686	122	501	1318	53
Arrive On Green	0.04	0.23	0.23	0.06	0.26	0.26	0.08	0.23	0.23	0.23	0.38	0.38
Sat Flow, veh/h	1774	902	817	1774	1863	1583	1774	3004	534	1774	3468	140
Grp Volume(v), veh/h	44	0	366	131	239	433	134	377	377	466	505	525
Grp Sat Flow(s),veh/h/ln	1774	0	1719	1774	1863	1583	1774	1770	1768	1774	1770	1838
Q Serve(g_s), s	1.6	0.0	18.2	4.9	9.6	22.7	5.0	18.3	18.3	17.7	21.7	21.7
Cycle Q Clear(g_c), s	1.6	0.0	18.2	4.9	9.6	22.7	5.0	18.3	18.3	17.7	21.7	21.7
Prop In Lane	1.00		0.48	1.00		1.00	1.00		0.30	1.00		0.08
Lane Grp Cap(c), veh/h	263	0	400	221	483	410	290	404	404	501	673	699
V/C Ratio(X)	0.17	0.00	0.92	0.59	0.50	1.06	0.46	0.93	0.93	0.93	0.75	0.75
Avail Cap(c_a), veh/h	298	0	416	221	483	410	302	404	404	533	693	719
HCM Platoon Ratio	1.00	1.00	1.00	1.00	1.00	1.00	1.00	1.00	1.00	1.00	1.00	1.00
Upstream Filter(I)	1.00	0.00	1.00	1.00	1.00	1.00	1.00	1.00	1.00	1.00	1.00	1.00
Uniform Delay (d), s/veh	24.2	0.0	32.8	25.6	27.6	32.5	23.4	33.2	33.2	21.7	23.6	23.6
Incr Delay (d2), s/veh	0.3	0.0	24.1	4.2	0.8	59.8	1.1	28.4	28.9	22.4	4.5	4.3
Initial Q Delay(d3),s/veh	0.0	0.0	0.0	0.0	0.0	0.0	0.0	0.0	0.0	0.0	0.0	0.0
%ile BackOfQ(50%),veh/ln	0.8	0.0	11.3	2.6	5.0	16.7	2.5	12.1	12.2	14.0	11.4	11.8
LnGrp Delay(d),s/veh	24.5	0.0	56.9	29.8	28.4	92.2	24.6	61.6	62.1	44.1	28.0	27.9
LnGrp LOS	C		E	C	C	F	C	E	E	D	C	C
Approach Vol, veh/h		410			803			888			1496	
Approach Delay, s/veh		53.4			63.0			56.2			33.0	
Approach LOS		D			E			E			C	

Timer	1	2	3	4	5	6	7	8
Assigned Phs	1	2	3	4	5	6	7	8
Phs Duration (G+Y+Rc), s	11.0	25.8	12.1	38.7	8.7	28.1	25.4	25.4
Change Period (Y+Rc), s	5.4	5.4	5.4	5.4	5.4	5.4	5.4	5.4
Max Green Setting (Gmax), s	5.6	21.2	7.3	34.3	5.0	21.8	21.6	20.0
Max Q Clear Time (g_c+I1), s	6.9	20.2	7.0	23.7	3.6	24.7	19.7	20.3
Green Ext Time (p_c), s	0.0	0.2	0.0	7.5	0.0	0.0	0.4	0.0

Intersection Summary	
HCM 2010 Ctrl Delay	47.8
HCM 2010 LOS	D

Movement	EBL	EBT	EBR	WBL	WBT	WBR	NBL	NBT	NBR	SBL	SBT	SBR
Lane Configurations												
Traffic Volume (veh/h)	253	623	126	604	1249	629	177	1028	321	553	2197	236
Future Volume (veh/h)	253	623	126	604	1249	629	177	1028	321	553	2197	236
Number	5	2	12	1	6	16	3	8	18	7	4	14
Initial Q (Qb), veh	0	0	0	0	0	0	0	0	0	0	0	0
Ped-Bike Adj(A_pbT)	1.00		1.00	1.00		1.00	1.00		1.00	1.00		1.00
Parking Bus, Adj	1.00	1.00	1.00	1.00	1.00	1.00	1.00	1.00	1.00	1.00	1.00	1.00
Adj Sat Flow, veh/h/ln	1863	1863	1900	1863	1863	1863	1863	1863	1863	1863	1863	1900
Adj Flow Rate, veh/h	312	663	140	679	1403	699	242	1130	412	570	2497	278
Adj No. of Lanes	2	2	0	2	2	1	2	2	1	2	3	0
Peak Hour Factor	0.81	0.94	0.90	0.89	0.89	0.90	0.73	0.91	0.78	0.97	0.88	0.85
Percent Heavy Veh, %	2	2	2	2	2	2	2	2	2	2	2	2
Cap, veh/h	266	710	150	519	1123	752	197	1076	720	541	1883	204
Arrive On Green	0.15	0.49	0.49	0.15	0.32	0.32	0.06	0.30	0.30	0.16	0.40	0.40
Sat Flow, veh/h	3442	2910	614	3442	3539	1583	3442	3539	1583	3442	4660	504
Grp Volume(v), veh/h	312	403	400	679	1403	699	242	1130	412	570	1797	978
Grp Sat Flow(s),veh/h/ln	1721	1770	1754	1721	1770	1583	1721	1770	1583	1721	1695	1774
Q Serve(g_s), s	11.6	32.1	32.2	22.6	47.6	38.7	8.6	45.6	6.2	23.6	60.6	60.6
Cycle Q Clear(g_c), s	11.6	32.1	32.2	22.6	47.6	38.7	8.6	45.6	6.2	23.6	60.6	60.6
Prop In Lane	1.00		0.35	1.00		1.00	1.00		1.00	1.00		0.28
Lane Grp Cap(c), veh/h	266	432	428	519	1123	752	197	1076	720	541	1370	717
V/C Ratio(X)	1.17	0.93	0.93	1.31	1.25	0.93	1.23	1.05	0.57	1.05	1.31	1.36
Avail Cap(c_a), veh/h	266	432	428	519	1123	752	197	1076	720	541	1370	717
HCM Platoon Ratio	2.00	2.00	2.00	1.00	1.00	1.00	1.00	1.00	1.00	1.00	1.00	1.00
Upstream Filter(I)	0.90	0.90	0.90	1.00	1.00	1.00	1.00	1.00	1.00	1.00	1.00	1.00
Uniform Delay (d), s/veh	63.4	37.2	37.3	63.7	51.2	37.1	70.7	52.2	30.1	63.2	44.7	44.7
Incr Delay (d2), s/veh	107.3	27.3	27.8	152.6	119.7	18.0	138.3	41.6	1.1	53.3	145.7	173.1
Initial Q Delay(d3),s/veh	0.0	0.0	0.0	0.0	0.0	0.0	0.0	0.0	0.0	0.0	0.0	0.0
%ile BackOfQ(50%),veh/ln	9.4	18.7	18.6	21.7	41.9	20.5	7.9	28.5	2.8	15.2	56.1	64.1
LnGrp Delay(d),s/veh	170.7	64.6	65.0	216.3	170.9	55.1	209.0	93.8	31.2	116.5	190.4	217.8
LnGrp LOS	F	E	E	F	F	E	F	F	C	F	F	F
Approach Vol, veh/h		1115			2781			1784			3345	
Approach Delay, s/veh		94.5			152.9			95.0			185.8	
Approach LOS		F			F			F			F	

Timer	1	2	3	4	5	6	7	8
Assigned Phs	1	2	3	4	5	6	7	8
Phs Duration (G+Y+Rc), s	28.0	42.0	14.0	66.0	17.0	53.0	29.0	51.0
Change Period (Y+Rc), s	5.4	5.4	5.4	5.4	5.4	5.4	5.4	5.4
Max Green Setting (Gmax), s	22.6	36.6	8.6	60.6	11.6	47.6	23.6	45.6
Max Q Clear Time (g_c+I1), s	24.6	34.2	10.6	62.6	13.6	49.6	25.6	47.6
Green Ext Time (p_c), s	0.0	1.1	0.0	0.0	0.0	0.0	0.0	0.0

Intersection Summary	
HCM 2010 Ctrl Delay	146.4
HCM 2010 LOS	F

Movement	EBL	EBT	EBR	WBL	WBT	WBR	NBL	NBT	NBR	SBL	SBT	SBR
Lane Configurations												
Traffic Volume (veh/h)	120	1400	30	30	2500	120	20	20	20	300	20	30
Future Volume (veh/h)	120	1400	30	30	2500	120	20	20	20	300	20	30
Number	5	2	12	1	6	16	3	8	18	7	4	14
Initial Q (Qb), veh	0	0	0	0	0	0	0	0	0	0	0	0
Ped-Bike Adj(A_pbT)	1.00		1.00	1.00		1.00	1.00		1.00	1.00		1.00
Parking Bus, Adj	1.00	1.00	1.00	1.00	1.00	1.00	1.00	1.00	1.00	1.00	1.00	1.00
Adj Sat Flow, veh/h/ln	1863	1863	1900	1863	1863	1900	1900	1863	1900	1863	1863	1863
Adj Flow Rate, veh/h	130	1522	33	33	2717	130	22	22	22	342	0	33
Adj No. of Lanes	1	3	0	1	3	0	0	1	0	2	0	1
Peak Hour Factor	0.92	0.92	0.92	0.92	0.92	0.92	0.92	0.92	0.92	0.92	0.92	0.92
Percent Heavy Veh, %	2	2	2	2	2	2	2	2	2	2	2	2
Cap, veh/h	151	3462	75	309	3258	154	25	25	25	395	0	176
Arrive On Green	0.09	1.00	1.00	0.02	0.65	0.65	0.04	0.04	0.04	0.11	0.00	0.11
Sat Flow, veh/h	1774	5122	111	1774	4977	235	577	577	577	3548	0	1583
Grp Volume(v), veh/h	130	1007	548	33	1839	1008	66	0	0	342	0	33
Grp Sat Flow(s),veh/h/ln	1774	1695	1843	1774	1695	1821	1732	0	0	1774	0	1583
Q Serve(g_s), s	4.9	0.0	0.0	0.9	61.4	64.2	5.7	0.0	0.0	14.2	0.0	2.8
Cycle Q Clear(g_c), s	4.9	0.0	0.0	0.9	61.4	64.2	5.7	0.0	0.0	14.2	0.0	2.8
Prop In Lane	1.00		0.06	1.00		0.13	0.33		0.33	1.00		1.00
Lane Grp Cap(c), veh/h	151	2291	1246	309	2219	1192	76	0	0	395	0	176
V/C Ratio(X)	0.86	0.44	0.44	0.11	0.83	0.85	0.87	0.00	0.00	0.87	0.00	0.19
Avail Cap(c_a), veh/h	194	2291	1246	326	2219	1192	76	0	0	464	0	207
HCM Platoon Ratio	2.00	2.00	2.00	1.00	1.00	1.00	1.00	1.00	1.00	1.00	1.00	1.00
Upstream Filter(I)	0.92	0.92	0.92	0.73	0.73	0.73	1.00	0.00	0.00	1.00	0.00	1.00
Uniform Delay (d), s/veh	39.3	0.0	0.0	7.9	19.6	20.0	71.3	0.0	0.0	65.6	0.0	60.5
Incr Delay (d2), s/veh	23.9	0.6	1.0	0.1	2.8	5.6	60.3	0.0	0.0	14.1	0.0	0.5
Initial Q Delay(d3),s/veh	0.0	0.0	0.0	0.0	0.0	0.0	0.0	0.0	0.0	0.0	0.0	0.0
%ile BackOfQ(50%),veh/ln	6.2	0.2	0.4	0.4	29.5	34.1	4.0	0.0	0.0	7.8	0.0	1.3
LnGrp Delay(d),s/veh	63.3	0.6	1.0	8.0	22.3	25.6	131.6	0.0	0.0	79.7	0.0	61.0
LnGrp LOS	E	A	A	A	C	C	F			E		E
Approach Vol, veh/h		1685			2880			66			375	
Approach Delay, s/veh		5.6			23.3			131.6			78.0	
Approach LOS		A			C			F			E	

Timer	1	2	3	4	5	6	7	8
Assigned Phs	1	2		4	5	6		8
Phs Duration (G+Y+Rc), s	9.1	106.8		22.1	12.3	103.6		12.0
Change Period (Y+Rc), s	5.4	5.4		5.4	5.4	5.4		5.4
Max Green Setting (Gmax), s	5.2	97.0		19.6	10.6	91.6		6.6
Max Q Clear Time (g_c+I1), s	2.9	2.0		16.2	6.9	66.2		7.7
Green Ext Time (p_c), s	0.0	87.7		0.5	0.1	24.8		0.0

Intersection Summary	
HCM 2010 Ctrl Delay	22.9
HCM 2010 LOS	C

Notes

User approved volume balancing among the lanes for turning movement.

Movement	EBL	EBT	EBR	WBL	WBT	WBR	NBL	NBT	NBR	SBL	SBT	SBR
Lane Configurations												
Traffic Volume (veh/h)	710	834	356	209	1542	25	242	564	128	97	763	1300
Future Volume (veh/h)	710	834	356	209	1542	25	242	564	128	97	763	1300
Number	5	2	12	1	6	16	3	8	18	7	4	14
Initial Q (Qb), veh	0	0	0	0	0	0	0	0	0	0	0	0
Ped-Bike Adj(A_pbT)	1.00		1.00	1.00		1.00	1.00		1.00	1.00		1.00
Parking Bus, Adj	1.00	1.00	1.00	1.00	1.00	1.00	1.00	1.00	1.00	1.00	1.00	1.00
Adj Sat Flow, veh/h/ln	1863	1863	1900	1863	1863	1863	1863	1863	1863	1863	1863	1863
Adj Flow Rate, veh/h	798	970	424	227	1623	0	269	627	164	111	820	0
Adj No. of Lanes	2	2	0	1	2	1	1	2	1	1	2	1
Peak Hour Factor	0.89	0.86	0.84	0.92	0.95	0.69	0.90	0.90	0.78	0.87	0.93	0.86
Percent Heavy Veh, %	2	2	2	2	2	2	2	2	2	2	2	2
Cap, veh/h	639	1042	449	197	1170	524	221	996	579	238	978	415
Arrive On Green	0.31	0.72	0.72	0.08	0.33	0.00	0.08	0.28	0.28	0.06	0.26	0.00
Sat Flow, veh/h	3442	2410	1039	1774	3539	1583	1774	3539	1583	1774	3725	1583
Grp Volume(v), veh/h	798	709	685	227	1623	0	269	627	164	111	820	0
Grp Sat Flow(s),veh/h/ln	1721	1770	1679	1774	1770	1583	1774	1770	1583	1774	1863	1583
Q Serve(g_s), s	27.8	50.5	53.4	12.6	49.6	0.0	11.6	23.2	11.0	6.8	31.2	0.0
Cycle Q Clear(g_c), s	27.8	50.5	53.4	12.6	49.6	0.0	11.6	23.2	11.0	6.8	31.2	0.0
Prop In Lane	1.00		0.62	1.00		1.00	1.00		1.00	1.00		1.00
Lane Grp Cap(c), veh/h	639	765	726	197	1170	524	221	996	579	238	978	415
V/C Ratio(X)	1.25	0.93	0.94	1.15	1.39	0.00	1.22	0.63	0.28	0.47	0.84	0.00
Avail Cap(c_a), veh/h	639	765	726	197	1170	524	221	1041	598	254	1058	450
HCM Platoon Ratio	1.67	1.67	1.67	1.00	1.00	1.00	1.00	1.00	1.00	1.00	1.00	1.00
Upstream Filter(I)	0.86	0.86	0.86	0.74	0.74	0.00	1.00	1.00	1.00	1.00	1.00	0.00
Uniform Delay (d), s/veh	51.8	18.9	19.3	44.8	50.2	0.0	46.3	47.1	33.7	38.6	52.3	0.0
Incr Delay (d2), s/veh	123.2	16.9	20.1	102.6	178.0	0.0	131.2	1.1	0.3	1.4	5.7	0.0
Initial Q Delay(d3),s/veh	0.0	0.0	0.0	0.0	0.0	0.0	0.0	0.0	0.0	0.0	0.0	0.0
%ile BackOfQ(50%),veh/ln	24.1	27.5	28.1	7.6	53.2	0.0	11.5	11.5	4.8	3.4	16.8	0.0
LnGrp Delay(d),s/veh	175.0	35.8	39.3	147.4	228.2	0.0	177.5	48.2	34.0	40.0	58.1	0.0
LnGrp LOS	F	D	D	F	F		F	D	C	D	E	
Approach Vol, veh/h		2192			1850			1060			931	
Approach Delay, s/veh		87.6			218.3			78.8			55.9	
Approach LOS		F			F			E			E	

Timer	1	2	3	4	5	6	7	8
Assigned Phs	1	2	3	4	5	6	7	8
Phs Duration (G+Y+Rc), s	18.0	70.2	17.0	44.8	33.2	55.0	14.1	47.6
Change Period (Y+Rc), s	5.4	5.4	5.4	5.4	5.4	5.4	5.4	5.4
Max Green Setting (Gmax), s	12.6	61.6	11.6	42.6	24.6	49.6	10.1	44.1
Max Q Clear Time (g_c+I1), s	14.6	55.4	13.6	33.2	29.8	51.6	8.8	25.2
Green Ext Time (p_c), s	0.0	5.0	0.0	6.1	0.0	0.0	0.0	9.9

Intersection Summary	
HCM 2010 Ctrl Delay	121.2
HCM 2010 LOS	F

Notes

User approved volume balancing among the lanes for turning movement.

Movement	EBL	EBT	EBR	WBL	WBT	WBR	NBL	NBT	NBR	SBL	SBT	SBR
Lane Configurations												
Traffic Volume (veh/h)	0	860	188	202	1301	0	0	0	0	407	22	332
Future Volume (veh/h)	0	860	188	202	1301	0	0	0	0	407	22	332
Number	5	2	12	1	6	16				7	4	14
Initial Q (Qb), veh	0	0	0	0	0	0				0	0	0
Ped-Bike Adj(A_pbT)	1.00		1.00	1.00		1.00				1.00		1.00
Parking Bus, Adj	1.00	1.00	1.00	1.00	1.00	1.00				1.00	1.00	1.00
Adj Sat Flow, veh/h/ln	0	1863	1863	1863	1863	0				1863	1863	1863
Adj Flow Rate, veh/h	0	1024	0	252	1369	0				475	0	0
Adj No. of Lanes	0	2	1	1	2	0				2	0	1
Peak Hour Factor	1.00	0.84	0.92	0.80	0.95	1.00				0.91	0.56	0.90
Percent Heavy Veh, %	0	2	2	2	2	0				2	2	2
Cap, veh/h	0	2398	1073	499	2734	0				552	0	246
Arrive On Green	0.00	0.90	0.00	0.06	0.77	0.00				0.16	0.00	0.00
Sat Flow, veh/h	0	3632	1583	1774	3632	0				3548	0	1583
Grp Volume(v), veh/h	0	1024	0	252	1369	0				475	0	0
Grp Sat Flow(s),veh/h/ln	0	1770	1583	1774	1770	0				1774	0	1583
Q Serve(g_s), s	0.0	7.0	0.0	6.2	21.5	0.0				19.6	0.0	0.0
Cycle Q Clear(g_c), s	0.0	7.0	0.0	6.2	21.5	0.0				19.6	0.0	0.0
Prop In Lane	0.00		1.00	1.00		0.00				1.00		1.00
Lane Grp Cap(c), veh/h	0	2398	1073	499	2734	0				552	0	246
V/C Ratio(X)	0.00	0.43	0.00	0.51	0.50	0.00				0.86	0.00	0.00
Avail Cap(c_a), veh/h	0	2398	1073	709	2734	0				1126	0	502
HCM Platoon Ratio	1.00	1.33	1.33	1.00	1.00	1.00				1.00	1.00	1.00
Upstream Filter(I)	0.00	0.37	0.00	0.81	0.81	0.00				1.00	0.00	0.00
Uniform Delay (d), s/veh	0.0	2.7	0.0	6.0	6.3	0.0				61.8	0.0	0.0
Incr Delay (d2), s/veh	0.0	0.2	0.0	0.6	0.5	0.0				4.1	0.0	0.0
Initial Q Delay(d3),s/veh	0.0	0.0	0.0	0.0	0.0	0.0				0.0	0.0	0.0
%ile BackOfQ(50%),veh/ln	0.0	3.2	0.0	3.1	10.7	0.0				9.9	0.0	0.0
LnGrp Delay(d),s/veh	0.0	2.9	0.0	6.6	6.9	0.0				65.8	0.0	0.0
LnGrp LOS		A		A	A					E		
Approach Vol, veh/h		1024			1621						475	
Approach Delay, s/veh		2.9			6.8						65.8	
Approach LOS		A			A						E	

Timer	1	2	3	4	5	6	7	8
Assigned Phs	1	2		4		6		
Phs Duration (G+Y+Rc), s	14.3	107.0		28.7		121.3		
Change Period (Y+Rc), s	5.4	5.4		5.4		5.4		
Max Green Setting (Gmax), s	26.6	59.6		47.6		91.6		
Max Q Clear Time (g_c+I1), s	8.2	9.0		21.6		23.5		
Green Ext Time (p_c), s	0.6	29.9		1.8		34.7		

Intersection Summary	
HCM 2010 Ctrl Delay	14.5
HCM 2010 LOS	B

Notes

User approved volume balancing among the lanes for turning movement.

Movement	EBL	EBT	EBR	WBL	WBT	WBR	NBL	NBT	NBR	SBL	SBT	SBR
Lane Configurations												
Traffic Volume (veh/h)	168	1066	0	0	1284	454	167	95	194	0	0	0
Future Volume (veh/h)	168	1066	0	0	1284	454	167	95	194	0	0	0
Number	5	2	12	1	6	16	3	8	18			
Initial Q (Qb), veh	0	0	0	0	0	0	0	0	0			
Ped-Bike Adj(A_pbT)	1.00		1.00	1.00		1.00	1.00		1.00			
Parking Bus, Adj	1.00	1.00	1.00	1.00	1.00	1.00	1.00	1.00	1.00			
Adj Sat Flow, veh/h/ln	1863	1863	0	0	1863	1863	1900	1863	1863			
Adj Flow Rate, veh/h	193	1198	0	0	1352	0	194	112	0			
Adj No. of Lanes	1	2	0	0	2	1	0	2	1			
Peak Hour Factor	0.87	0.89	1.00	1.00	0.95	0.91	0.86	0.85	0.84			
Percent Heavy Veh, %	2	2	0	0	2	2	2	2	2			
Cap, veh/h	347	2828	0	0	2538	1136	229	228	204			
Arrive On Green	0.09	1.00	0.00	0.00	0.72	0.00	0.13	0.13	0.00			
Sat Flow, veh/h	1774	3632	0	0	3632	1583	1774	1770	1583			
Grp Volume(v), veh/h	193	1198	0	0	1352	0	194	112	0			
Grp Sat Flow(s),veh/h/ln	1774	1770	0	0	1770	1583	1774	1770	1583			
Q Serve(g_s), s	4.4	0.0	0.0	0.0	26.2	0.0	16.0	8.8	0.0			
Cycle Q Clear(g_c), s	4.4	0.0	0.0	0.0	26.2	0.0	16.0	8.8	0.0			
Prop In Lane	1.00		0.00	0.00		1.00	1.00		1.00			
Lane Grp Cap(c), veh/h	347	2828	0	0	2538	1136	229	228	204			
V/C Ratio(X)	0.56	0.42	0.00	0.00	0.53	0.00	0.85	0.49	0.00			
Avail Cap(c_a), veh/h	510	2828	0	0	2538	1136	350	349	312			
HCM Platoon Ratio	2.00	2.00	1.00	1.00	1.00	1.00	1.00	1.00	1.00			
Upstream Filter(I)	0.81	0.81	0.00	0.00	1.00	0.00	1.00	1.00	0.00			
Uniform Delay (d), s/veh	8.7	0.0	0.0	0.0	9.7	0.0	63.9	60.7	0.0			
Incr Delay (d2), s/veh	1.1	0.4	0.0	0.0	0.8	0.0	11.3	1.6	0.0			
Initial Q Delay(d3),s/veh	0.0	0.0	0.0	0.0	0.0	0.0	0.0	0.0	0.0			
%ile BackOfQ(50%),veh/ln	2.7	0.1	0.0	0.0	13.1	0.0	8.6	4.4	0.0			
LnGrp Delay(d),s/veh	9.8	0.4	0.0	0.0	10.5	0.0	75.2	62.4	0.0			
LnGrp LOS	A	A			B		E	E				
Approach Vol, veh/h		1391			1352			306				
Approach Delay, s/veh		1.7			10.5			70.5				
Approach LOS		A			B			E				

Timer	1	2	3	4	5	6	7	8
Assigned Phs		2			5	6		8
Phs Duration (G+Y+Rc), s		125.2			12.3	113.0		24.8
Change Period (Y+Rc), s		5.4			5.4	5.4		5.4
Max Green Setting (Gmax), s		109.6			20.6	83.6		29.6
Max Q Clear Time (g_c+I1), s		2.0			6.4	28.2		18.0
Green Ext Time (p_c), s		45.7			0.4	33.7		1.3

Intersection Summary	
HCM 2010 Ctrl Delay	12.5
HCM 2010 LOS	B

Notes

User approved ignoring U-Turning movement.

Movement	EBL	EBT	EBR	WBL	WBT	WBR	NBL	NBT	NBR	SBL	SBT	SBR
Lane Configurations												
Traffic Volume (veh/h)	94	778	296	242	1445	68	235	233	53	69	296	73
Future Volume (veh/h)	94	778	296	242	1445	68	235	233	53	69	296	73
Number	5	2	12	1	6	16	3	8	18	7	4	14
Initial Q (Qb), veh	0	0	0	0	0	0	0	0	0	0	0	0
Ped-Bike Adj(A_pbT)	1.00		1.00	1.00		1.00	1.00		1.00	1.00		1.00
Parking Bus, Adj	1.00	1.00	1.00	1.00	1.00	1.00	1.00	1.00	1.00	1.00	1.00	1.00
Adj Sat Flow, veh/h/ln	1863	1863	1900	1863	1863	1900	1863	1863	1863	1863	1863	1863
Adj Flow Rate, veh/h	112	855	344	252	1490	106	267	291	63	95	333	87
Adj No. of Lanes	1	2	0	1	2	0	1	1	1	1	1	1
Peak Hour Factor	0.84	0.91	0.86	0.96	0.97	0.64	0.88	0.80	0.84	0.73	0.89	0.84
Percent Heavy Veh, %	2	2	2	2	2	2	2	2	2	2	2	2
Cap, veh/h	157	1109	444	280	1650	117	285	503	570	269	359	380
Arrive On Green	0.05	0.45	0.45	0.09	0.49	0.49	0.12	0.27	0.27	0.05	0.19	0.19
Sat Flow, veh/h	1774	2468	989	1774	3353	237	1774	1863	1583	1774	1863	1583
Grp Volume(v), veh/h	112	612	587	252	783	813	267	291	63	95	333	87
Grp Sat Flow(s),veh/h/ln	1774	1770	1688	1774	1770	1821	1774	1863	1583	1774	1863	1583
Q Serve(g_s), s	5.1	43.7	44.0	11.1	60.4	61.5	17.8	20.3	4.0	6.5	26.4	6.6
Cycle Q Clear(g_c), s	5.1	43.7	44.0	11.1	60.4	61.5	17.8	20.3	4.0	6.5	26.4	6.6
Prop In Lane	1.00		0.59	1.00		0.13	1.00		1.00	1.00		1.00
Lane Grp Cap(c), veh/h	157	795	758	280	871	896	285	503	570	269	359	380
V/C Ratio(X)	0.71	0.77	0.77	0.90	0.90	0.91	0.94	0.58	0.11	0.35	0.93	0.23
Avail Cap(c_a), veh/h	164	795	758	352	871	896	285	512	577	269	368	387
HCM Platoon Ratio	1.00	1.00	1.00	1.00	1.00	1.00	1.00	1.00	1.00	1.00	1.00	1.00
Upstream Filter(I)	1.00	1.00	1.00	0.67	0.67	0.67	1.00	1.00	1.00	1.00	1.00	1.00
Uniform Delay (d), s/veh	34.0	34.8	34.9	30.2	34.7	34.9	42.7	47.3	32.0	46.1	59.5	45.9
Incr Delay (d2), s/veh	12.9	7.1	7.6	15.9	10.1	10.5	37.2	1.6	0.1	0.8	28.8	0.3
Initial Q Delay(d3),s/veh	0.0	0.0	0.0	0.0	0.0	0.0	0.0	0.0	0.0	0.0	0.0	0.0
%ile BackOfQ(50%),veh/ln	3.1	22.8	22.1	6.6	31.8	33.3	11.5	10.6	1.7	3.2	16.5	2.9
LnGrp Delay(d),s/veh	46.9	41.9	42.4	46.1	44.8	45.4	79.9	48.9	32.1	46.9	88.3	46.2
LnGrp LOS	D	D	D	D	D	D	E	D	C	D	F	D
Approach Vol, veh/h		1311			1848			621			515	
Approach Delay, s/veh		42.6			45.2			60.5			73.6	
Approach LOS		D			D			E			E	

Timer	1	2	3	4	5	6	7	8
Assigned Phs	1	2	3	4	5	6	7	8
Phs Duration (G+Y+Rc), s	18.9	72.8	24.0	34.3	12.4	79.2	12.4	45.9
Change Period (Y+Rc), s	5.4	5.4	5.4	5.4	5.4	5.4	5.4	5.4
Max Green Setting (Gmax), s	19.6	60.6	18.6	29.6	7.6	72.6	7.0	41.2
Max Q Clear Time (g_c+I1), s	13.1	46.0	19.8	28.4	7.1	63.5	8.5	22.3
Green Ext Time (p_c), s	0.4	12.6	0.0	0.6	0.0	8.3	0.0	4.2

Intersection Summary	
HCM 2010 Ctrl Delay	50.0
HCM 2010 LOS	D

Movement	EBL	EBT	WBT	WBR	SBL	SBR
Lane Configurations						
Traffic Volume (veh/h)	38	866	1744	86	212	69
Future Volume (veh/h)	38	866	1744	86	212	69
Number	5	2	6	16	7	14
Initial Q (Qb), veh	0	0	0	0	0	0
Ped-Bike Adj(A_pbT)	1.00			1.00	1.00	1.00
Parking Bus, Adj	1.00	1.00	1.00	1.00	1.00	1.00
Adj Sat Flow, veh/h/ln	1863	1863	1863	1900	1863	1863
Adj Flow Rate, veh/h	49	941	1762	102	259	93
Adj No. of Lanes	1	2	2	0	1	1
Peak Hour Factor	0.77	0.92	0.99	0.84	0.82	0.74
Percent Heavy Veh, %	2	2	2	2	2	2
Cap, veh/h	173	2713	2608	150	286	256
Arrive On Green	0.77	0.77	0.77	0.77	0.16	0.16
Sat Flow, veh/h	245	3632	3496	195	1774	1583
Grp Volume(v), veh/h	49	941	910	954	259	93
Grp Sat Flow(s),veh/h/ln	245	1770	1770	1828	1774	1583
Q Serve(g_s), s	18.3	12.7	37.0	38.2	21.5	7.8
Cycle Q Clear(g_c), s	56.6	12.7	37.0	38.2	21.5	7.8
Prop In Lane	1.00			0.11	1.00	1.00
Lane Grp Cap(c), veh/h	173	2713	1357	1402	286	256
V/C Ratio(X)	0.28	0.35	0.67	0.68	0.90	0.36
Avail Cap(c_a), veh/h	173	2713	1357	1402	374	334
HCM Platoon Ratio	1.00	1.00	1.00	1.00	1.00	1.00
Upstream Filter(I)	0.55	0.55	0.52	0.52	1.00	1.00
Uniform Delay (d), s/veh	22.4	5.6	8.4	8.6	61.8	56.0
Incr Delay (d2), s/veh	2.2	0.2	0.7	0.7	20.8	0.9
Initial Q Delay(d3),s/veh	0.0	0.0	0.0	0.0	0.0	0.0
%ile BackOfQ(50%),veh/ln	1.3	6.2	18.2	19.4	12.2	3.5
LnGrp Delay(d),s/veh	24.6	5.8	9.1	9.3	82.6	56.9
LnGrp LOS	C	A	A	A	F	E
Approach Vol, veh/h		990	1864		352	
Approach Delay, s/veh		6.7	9.2		75.8	
Approach LOS		A	A		E	

Timer	1	2	3	4	5	6	7	8
Assigned Phs		2		4		6		
Phs Duration (G+Y+Rc), s		120.4		29.6		120.4		
Change Period (Y+Rc), s		5.4		5.4		5.4		
Max Green Setting (Gmax), s		107.6		31.6		107.6		
Max Q Clear Time (g_c+I1), s		58.6		23.5		40.2		
Green Ext Time (p_c), s		37.0		0.7		46.4		

Intersection Summary	
HCM 2010 Ctrl Delay	15.7
HCM 2010 LOS	B

Movement	EBL	EBT	EBR	WBL	WBT	WBR	NBL	NBT	NBR	SBL	SBT	SBR
Lane Configurations												
Traffic Volume (veh/h)	251	636	12	11	1656	39	71	6	10	140	3	389
Future Volume (veh/h)	251	636	12	11	1656	39	71	6	10	140	3	389
Number	5	2	12	1	6	16	3	8	18	7	4	14
Initial Q (Qb), veh	0	0	0	0	0	0	0	0	0	0	0	0
Ped-Bike Adj(A_pbT)	1.00		1.00	1.00		1.00	1.00		1.00	1.00		1.00
Parking Bus, Adj	1.00	1.00	1.00	1.00	1.00	1.00	1.00	1.00	1.00	1.00	1.00	1.00
Adj Sat Flow, veh/h/ln	1863	1863	1900	1863	1863	1900	1900	1863	1863	1900	1863	1863
Adj Flow Rate, veh/h	289	707	17	13	1861	55	116	19	13	163	8	427
Adj No. of Lanes	1	2	0	1	2	0	0	1	1	0	1	1
Peak Hour Factor	0.87	0.90	0.69	0.83	0.89	0.71	0.61	0.31	0.75	0.86	0.38	0.91
Percent Heavy Veh, %	2	2	2	2	2	2	2	2	2	2	2	2
Cap, veh/h	311	2628	63	462	2002	59	303	42	291	307	13	509
Arrive On Green	0.14	0.74	0.74	0.57	0.57	0.57	0.18	0.18	0.18	0.18	0.18	0.18
Sat Flow, veh/h	1774	3532	85	727	3511	103	1406	230	1583	1413	69	1583
Grp Volume(v), veh/h	289	354	370	13	934	982	135	0	13	171	0	427
Grp Sat Flow(s),veh/h/ln	1774	1770	1848	727	1770	1845	1636	0	1583	1482	0	1583
Q Serve(g_s), s	18.4	9.6	9.6	1.2	72.0	73.4	0.0	0.0	1.0	5.2	0.0	27.6
Cycle Q Clear(g_c), s	18.4	9.6	9.6	1.2	72.0	73.4	10.0	0.0	1.0	15.2	0.0	27.6
Prop In Lane	1.00		0.05	1.00		0.06	0.86		1.00	0.95		1.00
Lane Grp Cap(c), veh/h	311	1317	1375	462	1009	1052	346	0	291	320	0	509
V/C Ratio(X)	0.93	0.27	0.27	0.03	0.93	0.93	0.39	0.00	0.04	0.54	0.00	0.84
Avail Cap(c_a), veh/h	341	1317	1375	462	1009	1052	346	0	291	320	0	509
HCM Platoon Ratio	1.00	1.00	1.00	1.00	1.00	1.00	1.00	1.00	1.00	1.00	1.00	1.00
Upstream Filter(I)	0.95	0.95	0.95	1.00	1.00	1.00	1.00	0.00	1.00	1.00	0.00	1.00
Uniform Delay (d), s/veh	51.5	6.1	6.1	14.1	29.3	29.6	54.0	0.0	50.4	55.9	0.0	47.2
Incr Delay (d2), s/veh	28.7	0.5	0.5	0.1	15.2	15.8	0.7	0.0	0.1	1.7	0.0	11.8
Initial Q Delay(d3),s/veh	0.0	0.0	0.0	0.0	0.0	0.0	0.0	0.0	0.0	0.0	0.0	0.0
%ile BackOfQ(50%),veh/ln	14.3	4.8	5.0	0.2	39.3	41.7	5.0	0.0	0.4	6.7	0.0	18.1
LnGrp Delay(d),s/veh	80.3	6.6	6.6	14.2	44.5	45.4	54.7	0.0	50.4	57.7	0.0	59.0
LnGrp LOS	F	A	A	B	D	D	D		D	E		E
Approach Vol, veh/h		1013			1929			148			598	
Approach Delay, s/veh		27.6			44.8			54.4			58.6	
Approach LOS		C			D			D			E	

Timer	1	2	3	4	5	6	7	8
Assigned Phs		2		4	5	6		8
Phs Duration (G+Y+Rc), s		117.0		33.0	26.1	90.9		33.0
Change Period (Y+Rc), s		5.4		5.4	5.4	5.4		5.4
Max Green Setting (Gmax), s		111.6		27.6	23.2	83.0		27.6
Max Q Clear Time (g_c+I1), s		11.6		29.6	20.4	75.4		12.0
Green Ext Time (p_c), s		47.0		0.0	0.2	6.9		3.1

Intersection Summary	
HCM 2010 Ctrl Delay	42.7
HCM 2010 LOS	D

Movement	EBL	EBT	EBR	WBL	WBT	WBR	NBL	NBT	NBR	SBL	SBT	SBR
Lane Configurations												
Traffic Volume (veh/h)	363	166	288	261	332	29	327	1465	83	75	2908	455
Future Volume (veh/h)	363	166	288	261	332	29	327	1465	83	75	2908	455
Number	5	2	12	1	6	16	3	8	18	7	4	14
Initial Q (Qb), veh	0	0	0	0	0	0	0	0	0	0	0	0
Ped-Bike Adj(A_pbT)	1.00		1.00	1.00		1.00	1.00		1.00	1.00		1.00
Parking Bus, Adj	1.00	1.00	1.00	1.00	1.00	1.00	1.00	1.00	1.00	1.00	1.00	1.00
Adj Sat Flow, veh/h/ln	1863	1863	1863	1863	1863	1900	1863	1863	1900	1863	1863	1863
Adj Flow Rate, veh/h	408	195	0	239	464	41	363	1526	104	101	3196	548
Adj No. of Lanes	2	1	1	1	2	0	2	3	0	1	3	1
Peak Hour Factor	0.89	0.85	0.86	0.85	0.90	0.70	0.90	0.96	0.80	0.74	0.91	0.83
Percent Heavy Veh, %	2	2	2	2	2	2	2	2	2	2	2	2
Cap, veh/h	464	243	207	220	419	37	312	2728	186	230	2597	809
Arrive On Green	0.13	0.13	0.00	0.12	0.12	0.12	0.09	0.56	0.56	0.04	0.51	0.51
Sat Flow, veh/h	3548	1863	1583	1774	3376	297	3442	4863	331	1774	5085	1583
Grp Volume(v), veh/h	408	195	0	239	255	250	363	1064	566	101	3196	548
Grp Sat Flow(s),veh/h/ln	1774	1863	1583	1774	1863	1810	1721	1695	1804	1774	1695	1583
Q Serve(g_s), s	16.9	15.2	0.0	18.6	18.6	18.6	13.6	30.1	30.1	4.1	76.6	38.9
Cycle Q Clear(g_c), s	16.9	15.2	0.0	18.6	18.6	18.6	13.6	30.1	30.1	4.1	76.6	38.9
Prop In Lane	1.00		1.00	1.00		0.16	1.00		0.18	1.00		1.00
Lane Grp Cap(c), veh/h	464	243	207	220	231	224	312	1902	1012	230	2597	809
V/C Ratio(X)	0.88	0.80	0.00	1.09	1.11	1.11	1.16	0.56	0.56	0.44	1.23	0.68
Avail Cap(c_a), veh/h	464	243	207	220	231	224	312	1902	1012	282	2597	809
HCM Platoon Ratio	1.00	1.00	1.00	1.00	1.00	1.00	1.00	1.00	1.00	1.00	1.00	1.00
Upstream Filter(I)	1.00	1.00	0.00	1.00	1.00	1.00	1.00	1.00	1.00	1.00	1.00	1.00
Uniform Delay (d), s/veh	64.0	63.3	0.0	65.7	65.7	65.7	68.2	21.1	21.1	18.6	36.7	27.5
Incr Delay (d2), s/veh	20.6	23.6	0.0	85.6	90.3	93.5	102.8	0.4	0.7	1.3	107.4	2.3
Initial Q Delay(d3),s/veh	0.0	0.0	0.0	0.0	0.0	0.0	0.0	0.0	0.0	0.0	0.0	0.0
%ile BackOfQ(50%),veh/ln	9.7	9.4	0.0	14.3	15.4	15.1	10.9	14.1	15.1	2.1	61.4	17.4
LnGrp Delay(d),s/veh	84.7	86.9	0.0	151.3	156.0	159.2	171.0	21.4	21.8	19.9	144.1	29.7
LnGrp LOS	F	F		F	F	F	F	C	C	B	F	C
Approach Vol, veh/h		603			744			1993			3845	
Approach Delay, s/veh		85.4			155.6			48.8			124.5	
Approach LOS		F			F			D			F	

Timer	1	2	3	4	5	6	7	8
Assigned Phs		2	3	4		6	7	8
Phs Duration (G+Y+Rc), s		25.0	19.0	82.0		24.0	11.5	89.5
Change Period (Y+Rc), s		5.4	5.4	5.4		5.4	5.4	5.4
Max Green Setting (Gmax), s		19.6	13.6	76.6		18.6	10.4	79.8
Max Q Clear Time (g_c+I1), s		18.9	15.6	78.6		20.6	6.1	32.1
Green Ext Time (p_c), s		0.2	0.0	0.0		0.0	0.1	47.4

Intersection Summary	
HCM 2010 Ctrl Delay	103.4
HCM 2010 LOS	F

Notes

User approved volume balancing among the lanes for turning movement.

Movement	EBL	EBT	EBR	WBL	WBT	WBR	NBL	NBT	NBR	SBL	SBT	SBR
Lane Configurations												
Traffic Volume (veh/h)	23	272	37	19	481	45	29	33	9	62	129	116
Future Volume (veh/h)	23	272	37	19	481	45	29	33	9	62	129	116
Number	5	2	12	1	6	16	3	8	18	7	4	14
Initial Q (Qb), veh	0	0	0	0	0	0	0	0	0	0	0	0
Ped-Bike Adj(A_pbT)	1.00		1.00	1.00		1.00	1.00		1.00	1.00		1.00
Parking Bus, Adj	1.00	1.00	1.00	1.00	1.00	1.00	1.00	1.00	1.00	1.00	1.00	1.00
Adj Sat Flow, veh/h/ln	1863	1863	1900	1863	1863	1900	1863	1863	1900	1863	1863	1900
Adj Flow Rate, veh/h	32	309	52	28	559	56	41	52	12	84	136	171
Adj No. of Lanes	1	1	0	1	1	0	1	1	0	1	1	0
Peak Hour Factor	0.72	0.88	0.71	0.68	0.86	0.80	0.70	0.63	0.75	0.74	0.95	0.68
Percent Heavy Veh, %	2	2	2	2	2	2	2	2	2	2	2	2
Cap, veh/h	246	637	107	423	678	68	217	290	67	428	162	204
Arrive On Green	0.03	0.41	0.41	0.03	0.41	0.41	0.04	0.20	0.20	0.06	0.22	0.22
Sat Flow, veh/h	1774	1555	262	1774	1666	167	1774	1465	338	1774	751	945
Grp Volume(v), veh/h	32	0	361	28	0	615	41	0	64	84	0	307
Grp Sat Flow(s),veh/h/ln	1774	0	1817	1774	0	1833	1774	0	1803	1774	0	1696
Q Serve(g_s), s	0.7	0.0	10.4	0.6	0.0	21.2	1.3	0.0	2.1	2.6	0.0	12.3
Cycle Q Clear(g_c), s	0.7	0.0	10.4	0.6	0.0	21.2	1.3	0.0	2.1	2.6	0.0	12.3
Prop In Lane	1.00		0.14	1.00		0.09	1.00		0.19	1.00		0.56
Lane Grp Cap(c), veh/h	246	0	745	423	0	746	217	0	357	428	0	367
V/C Ratio(X)	0.13	0.00	0.48	0.07	0.00	0.82	0.19	0.00	0.18	0.20	0.00	0.84
Avail Cap(c_a), veh/h	316	0	988	497	0	997	278	0	484	472	0	469
HCM Platoon Ratio	1.00	1.00	1.00	1.00	1.00	1.00	1.00	1.00	1.00	1.00	1.00	1.00
Upstream Filter(I)	1.00	0.00	1.00	1.00	0.00	1.00	1.00	0.00	1.00	1.00	0.00	1.00
Uniform Delay (d), s/veh	14.6	0.0	15.4	12.2	0.0	18.8	22.0	0.0	23.6	20.7	0.0	26.6
Incr Delay (d2), s/veh	0.2	0.0	0.5	0.1	0.0	4.3	0.4	0.0	0.2	0.2	0.0	10.2
Initial Q Delay(d3),s/veh	0.0	0.0	0.0	0.0	0.0	0.0	0.0	0.0	0.0	0.0	0.0	0.0
%ile BackOfQ(50%),veh/ln	0.4	0.0	5.2	0.3	0.0	11.5	0.6	0.0	1.1	1.3	0.0	6.7
LnGrp Delay(d),s/veh	14.9	0.0	15.9	12.2	0.0	23.1	22.4	0.0	23.8	20.9	0.0	36.7
LnGrp LOS	B		B	B		C	C		C	C		D
Approach Vol, veh/h		393			643			105			391	
Approach Delay, s/veh		15.8			22.6			23.3			33.3	
Approach LOS		B			C			C			C	

Timer	1	2	3	4	5	6	7	8
Assigned Phs	1	2	3	4	5	6	7	8
Phs Duration (G+Y+Rc), s	7.5	34.4	8.2	20.7	7.7	34.2	9.4	19.4
Change Period (Y+Rc), s	5.4	5.4	5.4	5.4	5.4	5.4	5.4	5.4
Max Green Setting (Gmax), s	5.1	38.5	5.2	19.6	5.1	38.5	5.8	19.0
Max Q Clear Time (g_c+I1), s	2.6	12.4	3.3	14.3	2.7	23.2	4.6	4.1
Green Ext Time (p_c), s	0.0	6.9	0.0	1.0	0.0	5.6	0.0	2.0

Intersection Summary	
HCM 2010 Ctrl Delay	23.6
HCM 2010 LOS	C

Movement	EBL	EBT	EBR	WBL	WBT	WBR	NBL	NBT	NBR	SBL	SBT	SBR
Lane Configurations												
Traffic Volume (veh/h)	32	280	63	332	430	21	55	174	29	32	493	69
Future Volume (veh/h)	32	280	63	332	430	21	55	174	29	32	493	69
Number	5	2	12	1	6	16	3	8	18	7	4	14
Initial Q (Qb), veh	0	0	0	0	0	0	0	0	0	0	0	0
Ped-Bike Adj(A_pbT)	1.00		1.00	1.00		1.00	1.00		1.00	1.00		1.00
Parking Bus, Adj	1.00	1.00	1.00	1.00	1.00	1.00	1.00	1.00	1.00	1.00	1.00	1.00
Adj Sat Flow, veh/h/ln	1863	1863	1900	1863	1863	1900	1863	1863	1900	1863	1863	1900
Adj Flow Rate, veh/h	40	326	95	382	524	30	64	200	36	48	560	84
Adj No. of Lanes	1	1	0	1	1	0	1	1	0	1	1	0
Peak Hour Factor	0.80	0.86	0.66	0.87	0.82	0.71	0.86	0.87	0.81	0.67	0.88	0.82
Percent Heavy Veh, %	2	2	2	2	2	2	2	2	2	2	2	2
Cap, veh/h	239	342	100	405	702	40	126	542	98	411	553	83
Arrive On Green	0.03	0.25	0.25	0.19	0.40	0.40	0.04	0.35	0.35	0.03	0.35	0.35
Sat Flow, veh/h	1774	1387	404	1774	1745	100	1774	1537	277	1774	1583	238
Grp Volume(v), veh/h	40	0	421	382	0	554	64	0	236	48	0	644
Grp Sat Flow(s),veh/h/ln	1774	0	1791	1774	0	1845	1774	0	1814	1774	0	1821
Q Serve(g_s), s	2.0	0.0	27.6	20.2	0.0	30.6	2.7	0.0	11.5	2.0	0.0	41.6
Cycle Q Clear(g_c), s	2.0	0.0	27.6	20.2	0.0	30.6	2.7	0.0	11.5	2.0	0.0	41.6
Prop In Lane	1.00		0.23	1.00		0.05	1.00		0.15	1.00		0.13
Lane Grp Cap(c), veh/h	239	0	442	405	0	742	126	0	639	411	0	636
V/C Ratio(X)	0.17	0.00	0.95	0.94	0.00	0.75	0.51	0.00	0.37	0.12	0.00	1.01
Avail Cap(c_a), veh/h	260	0	442	405	0	742	138	0	639	428	0	636
HCM Platoon Ratio	1.00	1.00	1.00	1.00	1.00	1.00	1.00	1.00	1.00	1.00	1.00	1.00
Upstream Filter(I)	1.00	0.00	1.00	1.00	0.00	1.00	1.00	0.00	1.00	1.00	0.00	1.00
Uniform Delay (d), s/veh	32.5	0.0	44.2	32.8	0.0	30.5	30.6	0.0	28.7	23.9	0.0	38.8
Incr Delay (d2), s/veh	0.3	0.0	31.0	30.4	0.0	4.2	3.2	0.0	0.4	0.1	0.0	39.1
Initial Q Delay(d3),s/veh	0.0	0.0	0.0	0.0	0.0	0.0	0.0	0.0	0.0	0.0	0.0	0.0
%ile BackOfQ(50%),veh/ln	1.0	0.0	17.5	15.7	0.0	16.4	1.4	0.0	5.8	1.0	0.0	27.7
LnGrp Delay(d),s/veh	32.8	0.0	75.2	63.2	0.0	34.6	33.7	0.0	29.1	24.0	0.0	77.9
LnGrp LOS	C		E	E		C	C		C	C		F
Approach Vol, veh/h		461			936			300			692	
Approach Delay, s/veh		71.5			46.3			30.1			74.1	
Approach LOS		E			D			C			E	

Timer	1	2	3	4	5	6	7	8
Assigned Phs	1	2	3	4	5	6	7	8
Phs Duration (G+Y+Rc), s	27.6	34.8	9.8	47.0	9.1	53.3	9.4	47.4
Change Period (Y+Rc), s	5.4	5.4	5.4	5.4	5.4	5.4	5.4	5.4
Max Green Setting (Gmax), s	22.2	29.4	5.2	41.6	5.1	46.5	5.1	41.7
Max Q Clear Time (g_c+I1), s	22.2	29.6	4.7	43.6	4.0	32.6	4.0	13.5
Green Ext Time (p_c), s	0.0	0.0	0.0	0.0	0.0	5.3	0.0	6.7

Intersection Summary	
HCM 2010 Ctrl Delay	57.2
HCM 2010 LOS	E

Movement	EBL	EBT	EBR	WBL	WBT	WBR	NBL	NBT	NBR	SBL	SBT	SBR
Lane Configurations												
Traffic Volume (veh/h)	55	76	17	3	322	119	18	20	7	208	144	552
Future Volume (veh/h)	55	76	17	3	322	119	18	20	7	208	144	552
Number	5	2	12	1	6	16	3	8	18	7	4	14
Initial Q (Qb), veh	0	0	0	0	0	0	0	0	0	0	0	0
Ped-Bike Adj(A_pbT)	1.00		1.00	1.00		1.00	1.00		1.00	1.00		1.00
Parking Bus, Adj	1.00	1.00	1.00	1.00	1.00	1.00	1.00	1.00	1.00	1.00	1.00	1.00
Adj Sat Flow, veh/h/ln	1863	1863	1900	1863	1863	1900	1863	1863	1900	1863	1863	1863
Adj Flow Rate, veh/h	77	141	28	4	383	157	24	24	9	229	178	627
Adj No. of Lanes	1	1	0	1	1	0	1	1	0	1	1	1
Peak Hour Factor	0.71	0.54	0.61	0.75	0.84	0.76	0.75	0.83	0.75	0.91	0.81	0.88
Percent Heavy Veh, %	2	2	2	2	2	2	2	2	2	2	2	2
Cap, veh/h	232	627	124	525	522	214	353	571	214	686	823	700
Arrive On Green	0.42	0.42	0.42	0.42	0.42	0.42	0.44	0.44	0.44	0.44	0.44	0.44
Sat Flow, veh/h	862	1510	300	1211	1257	515	674	1293	485	1370	1863	1583
Grp Volume(v), veh/h	77	0	169	4	0	540	24	0	33	229	178	627
Grp Sat Flow(s),veh/h/ln	862	0	1810	1211	0	1772	674	0	1777	1370	1863	1583
Q Serve(g_s), s	6.2	0.0	4.5	0.2	0.0	19.4	1.7	0.0	0.8	8.6	4.5	27.6
Cycle Q Clear(g_c), s	25.6	0.0	4.5	4.7	0.0	19.4	6.2	0.0	0.8	9.4	4.5	27.6
Prop In Lane	1.00		0.17	1.00		0.29	1.00		0.27	1.00		1.00
Lane Grp Cap(c), veh/h	232	0	751	525	0	735	353	0	785	686	823	700
V/C Ratio(X)	0.33	0.00	0.22	0.01	0.00	0.73	0.07	0.00	0.04	0.33	0.22	0.90
Avail Cap(c_a), veh/h	315	0	925	642	0	906	418	0	956	818	1002	851
HCM Platoon Ratio	1.00	1.00	1.00	1.00	1.00	1.00	1.00	1.00	1.00	1.00	1.00	1.00
Upstream Filter(I)	1.00	0.00	1.00	1.00	0.00	1.00	1.00	0.00	1.00	1.00	1.00	1.00
Uniform Delay (d), s/veh	29.3	0.0	14.2	15.8	0.0	18.6	14.9	0.0	12.0	14.7	13.0	19.5
Incr Delay (d2), s/veh	0.8	0.0	0.2	0.0	0.0	2.4	0.1	0.0	0.0	0.3	0.1	10.6
Initial Q Delay(d3),s/veh	0.0	0.0	0.0	0.0	0.0	0.0	0.0	0.0	0.0	0.0	0.0	0.0
%ile BackOfQ(50%),veh/ln	1.5	0.0	2.3	0.1	0.0	9.9	0.3	0.0	0.4	3.3	2.3	14.1
LnGrp Delay(d),s/veh	30.2	0.0	14.4	15.8	0.0	21.0	15.0	0.0	12.0	14.9	13.1	30.1
LnGrp LOS	C		B	B		C	B		B	B	B	C
Approach Vol, veh/h		246			544			57			1034	
Approach Delay, s/veh		19.3			21.0			13.3			23.8	
Approach LOS		B			C			B			C	

Timer	1	2	3	4	5	6	7	8
Assigned Phs		2		4		6		8
Phs Duration (G+Y+Rc), s		36.7		38.8		36.7		38.8
Change Period (Y+Rc), s		5.4		5.4		5.4		5.4
Max Green Setting (Gmax), s		38.6		40.6		38.6		40.6
Max Q Clear Time (g_c+I1), s		27.6		29.6		21.4		8.2
Green Ext Time (p_c), s		3.7		3.7		4.7		5.2

Intersection Summary	
HCM 2010 Ctrl Delay	22.1
HCM 2010 LOS	C

Movement	EBL	EBT	EBR	WBL	WBT	WBR	NBL	NBT	NBR	SBL	SBT	SBR
Lane Configurations												
Traffic Volume (veh/h)	61	52	184	100	130	4	142	437	29	2	501	126
Future Volume (veh/h)	61	52	184	100	130	4	142	437	29	2	501	126
Number	5	2	12	1	6	16	3	8	18	7	4	14
Initial Q (Qb), veh	0	0	0	0	0	0	0	0	0	0	0	0
Ped-Bike Adj(A_pbT)	1.00		1.00	1.00		1.00	1.00		1.00	1.00		1.00
Parking Bus, Adj	1.00	1.00	1.00	1.00	1.00	1.00	1.00	1.00	1.00	1.00	1.00	1.00
Adj Sat Flow, veh/h/ln	1863	1863	1900	1863	1863	1900	1863	1863	1900	1863	1863	1900
Adj Flow Rate, veh/h	90	65	214	120	160	12	197	497	44	4	626	140
Adj No. of Lanes	1	1	0	1	1	0	1	1	0	1	1	0
Peak Hour Factor	0.68	0.80	0.86	0.83	0.81	0.33	0.72	0.88	0.66	0.50	0.80	0.90
Percent Heavy Veh, %	2	2	2	2	2	2	2	2	2	2	2	2
Cap, veh/h	290	65	214	190	298	22	246	872	77	363	653	146
Arrive On Green	0.06	0.17	0.17	0.06	0.17	0.17	0.08	0.52	0.52	0.01	0.44	0.44
Sat Flow, veh/h	1774	382	1258	1774	1712	128	1774	1687	149	1774	1475	330
Grp Volume(v), veh/h	90	0	279	120	0	172	197	0	541	4	0	766
Grp Sat Flow(s),veh/h/ln	1774	0	1641	1774	0	1840	1774	0	1836	1774	0	1805
Q Serve(g_s), s	3.6	0.0	14.9	4.9	0.0	7.5	5.0	0.0	17.7	0.1	0.0	36.0
Cycle Q Clear(g_c), s	3.6	0.0	14.9	4.9	0.0	7.5	5.0	0.0	17.7	0.1	0.0	36.0
Prop In Lane	1.00		0.77	1.00		0.07	1.00		0.08	1.00		0.18
Lane Grp Cap(c), veh/h	290	0	279	190	0	320	246	0	950	363	0	798
V/C Ratio(X)	0.31	0.00	1.00	0.63	0.00	0.54	0.80	0.00	0.57	0.01	0.00	0.96
Avail Cap(c_a), veh/h	293	0	279	190	0	320	278	0	950	455	0	816
HCM Platoon Ratio	1.00	1.00	1.00	1.00	1.00	1.00	1.00	1.00	1.00	1.00	1.00	1.00
Upstream Filter(I)	1.00	0.00	1.00	1.00	0.00	1.00	1.00	0.00	1.00	1.00	0.00	1.00
Uniform Delay (d), s/veh	27.9	0.0	36.3	29.0	0.0	33.0	19.5	0.0	14.5	14.1	0.0	23.6
Incr Delay (d2), s/veh	0.6	0.0	53.6	6.6	0.0	1.8	13.8	0.0	0.8	0.0	0.0	21.9
Initial Q Delay(d3),s/veh	0.0	0.0	0.0	0.0	0.0	0.0	0.0	0.0	0.0	0.0	0.0	0.0
%ile BackOfQ(50%),veh/ln	1.8	0.0	10.8	2.7	0.0	3.9	3.4	0.0	9.1	0.1	0.0	22.7
LnGrp Delay(d),s/veh	28.5	0.0	89.9	35.7	0.0	34.7	33.3	0.0	15.3	14.1	0.0	45.5
LnGrp LOS	C		F	D		C	C		B	B		D
Approach Vol, veh/h		369			292			738			770	
Approach Delay, s/veh		74.9			35.1			20.1			45.4	
Approach LOS		E			D			C			D	

Timer	1	2	3	4	5	6	7	8
Assigned Phs	1	2	3	4	5	6	7	8
Phs Duration (G+Y+Rc), s	10.7	20.3	12.4	44.1	10.4	20.6	5.9	50.7
Change Period (Y+Rc), s	5.4	5.4	5.4	5.4	5.4	5.4	5.4	5.4
Max Green Setting (Gmax), s	5.3	14.9	8.6	39.6	5.1	15.1	5.0	43.2
Max Q Clear Time (g_c+I1), s	6.9	16.9	7.0	38.0	5.6	9.5	2.1	19.7
Green Ext Time (p_c), s	0.0	0.0	0.1	0.7	0.0	1.3	0.0	10.4

Intersection Summary	
HCM 2010 Ctrl Delay	40.4
HCM 2010 LOS	D

Movement	EBL	EBT	EBR	WBL	WBT	WBR	NBL	NBT	NBR	SBL	SBT	SBR
Lane Configurations												
Traffic Volume (veh/h)	20	850	130	80	1850	20	0	0	60	10	10	10
Future Volume (veh/h)	20	850	130	80	1850	20	0	0	60	10	10	10
Number	5	2	12	1	6	16	3	8	18	7	4	14
Initial Q (Qb), veh	0	0	0	0	0	0	0	0	0	0	0	0
Ped-Bike Adj(A_pbT)	1.00		1.00	1.00		1.00	1.00		1.00	1.00		1.00
Parking Bus, Adj	1.00	1.00	1.00	1.00	1.00	1.00	1.00	1.00	1.00	1.00	1.00	1.00
Adj Sat Flow, veh/h/ln	1863	1863	1900	1863	1863	1900	0	1863	1900	1900	1863	1863
Adj Flow Rate, veh/h	22	924	141	87	2011	22	0	0	65	11	11	11
Adj No. of Lanes	1	2	0	1	2	0	0	1	0	0	1	1
Peak Hour Factor	0.92	0.92	0.92	0.92	0.92	0.92	0.92	0.92	0.92	0.92	0.92	0.92
Percent Heavy Veh, %	2	2	2	2	2	2	0	2	2	2	2	2
Cap, veh/h	205	2693	411	480	2936	32	0	0	85	46	33	85
Arrive On Green	0.04	1.00	1.00	0.82	0.82	0.82	0.00	0.00	0.05	0.05	0.05	0.05
Sat Flow, veh/h	1774	3080	470	528	3586	39	0	0	1583	188	624	1583
Grp Volume(v), veh/h	22	531	534	87	990	1043	0	0	65	22	0	11
Grp Sat Flow(s),veh/h/ln	1774	1770	1780	528	1770	1856	0	0	1583	811	0	1583
Q Serve(g_s), s	0.3	0.0	0.0	5.4	34.6	34.9	0.0	0.0	6.1	0.1	0.0	1.0
Cycle Q Clear(g_c), s	0.3	0.0	0.0	5.4	34.6	34.9	0.0	0.0	6.1	6.1	0.0	1.0
Prop In Lane	1.00		0.26	1.00		0.02	0.00		1.00	0.50		1.00
Lane Grp Cap(c), veh/h	205	1548	1557	480	1449	1519	0	0	85	79	0	85
V/C Ratio(X)	0.11	0.34	0.34	0.18	0.68	0.69	0.00	0.00	0.77	0.28	0.00	0.13
Avail Cap(c_a), veh/h	236	1548	1557	480	1449	1519	0	0	91	85	0	91
HCM Platoon Ratio	2.00	2.00	2.00	1.00	1.00	1.00	1.00	1.00	1.00	1.00	1.00	1.00
Upstream Filter(I)	0.91	0.91	0.91	0.27	0.27	0.27	0.00	0.00	1.00	1.00	0.00	1.00
Uniform Delay (d), s/veh	6.6	0.0	0.0	3.0	5.6	5.6	0.0	0.0	70.1	68.1	0.0	67.7
Incr Delay (d2), s/veh	0.2	0.6	0.6	0.2	0.7	0.7	0.0	0.0	30.3	1.9	0.0	0.7
Initial Q Delay(d3),s/veh	0.0	0.0	0.0	0.0	0.0	0.0	0.0	0.0	0.0	0.0	0.0	0.0
%ile BackOfQ(50%),veh/ln	0.3	0.2	0.2	0.8	16.8	18.0	0.0	0.0	3.4	0.9	0.0	0.9
LnGrp Delay(d),s/veh	6.8	0.6	0.6	3.2	6.3	6.3	0.0	0.0	100.4	69.9	0.0	68.4
LnGrp LOS	A	A	A	A	A	A			F	E		E
Approach Vol, veh/h		1087			2120			65			33	
Approach Delay, s/veh		0.7			6.2			100.4			69.4	
Approach LOS		A			A			F			E	

Timer	1	2	3	4	5	6	7	8
Assigned Phs		2		4	5	6		8
Phs Duration (G+Y+Rc), s		136.6		13.4	8.4	128.2		13.4
Change Period (Y+Rc), s		5.4		5.4	5.4	5.4		5.4
Max Green Setting (Gmax), s		130.6		8.6	5.6	119.6		8.6
Max Q Clear Time (g_c+I1), s		2.0		8.1	2.3	36.9		8.1
Green Ext Time (p_c), s		78.5		0.0	0.0	59.3		0.0

Intersection Summary	
HCM 2010 Ctrl Delay	6.9
HCM 2010 LOS	A

Movement	EBL	EBT	EBR	WBL	WBT	WBR	NBL	NBT	NBR	SBL	SBT	SBR
Lane Configurations												
Traffic Volume (veh/h)	70	810	70	130	1640	90	190	130	130	60	10	20
Future Volume (veh/h)	70	810	70	130	1640	90	190	130	130	60	10	20
Number	5	2	12	1	6	16	3	8	18	7	4	14
Initial Q (Qb), veh	0	0	0	0	0	0	0	0	0	0	0	0
Ped-Bike Adj(A_pbT)	1.00		1.00	1.00		1.00	1.00		1.00	1.00		1.00
Parking Bus, Adj	1.00	1.00	1.00	1.00	1.00	1.00	1.00	1.00	1.00	1.00	1.00	1.00
Adj Sat Flow, veh/h/ln	1863	1863	1900	1863	1863	1900	1863	1863	1863	1863	1863	1863
Adj Flow Rate, veh/h	76	880	76	141	1783	98	207	141	141	65	11	22
Adj No. of Lanes	1	2	0	1	2	0	1	1	1	1	1	1
Peak Hour Factor	0.92	0.92	0.92	0.92	0.92	0.92	0.92	0.92	0.92	0.92	0.92	0.92
Percent Heavy Veh, %	2	2	2	2	2	2	2	2	2	2	2	2
Cap, veh/h	176	2172	188	505	2277	124	305	211	243	162	62	103
Arrive On Green	0.06	1.00	1.00	0.04	0.67	0.67	0.12	0.11	0.11	0.04	0.03	0.03
Sat Flow, veh/h	1774	3297	285	1774	3413	186	1774	1863	1583	1774	1863	1583
Grp Volume(v), veh/h	76	472	484	141	917	964	207	141	141	65	11	22
Grp Sat Flow(s),veh/h/ln	1774	1770	1812	1774	1770	1830	1774	1863	1583	1774	1863	1583
Q Serve(g_s), s	2.1	0.0	0.0	3.9	53.8	55.5	16.4	10.9	12.4	5.3	0.9	2.0
Cycle Q Clear(g_c), s	2.1	0.0	0.0	3.9	53.8	55.5	16.4	10.9	12.4	5.3	0.9	2.0
Prop In Lane	1.00		0.16	1.00		0.10	1.00		1.00	1.00		1.00
Lane Grp Cap(c), veh/h	176	1166	1194	505	1180	1221	305	211	243	162	62	103
V/C Ratio(X)	0.43	0.41	0.41	0.28	0.78	0.79	0.68	0.67	0.58	0.40	0.18	0.21
Avail Cap(c_a), veh/h	221	1166	1194	568	1180	1221	329	245	272	162	71	111
HCM Platoon Ratio	2.00	2.00	2.00	1.00	1.00	1.00	1.00	1.00	1.00	1.00	1.00	1.00
Upstream Filter(I)	0.89	0.89	0.89	0.69	0.69	0.69	1.00	1.00	1.00	1.00	1.00	1.00
Uniform Delay (d), s/veh	20.9	0.0	0.0	7.4	17.3	17.6	58.5	63.8	59.0	66.3	70.5	66.5
Incr Delay (d2), s/veh	1.5	0.9	0.9	0.2	3.5	3.7	5.0	5.6	2.5	1.6	1.3	1.0
Initial Q Delay(d3),s/veh	0.0	0.0	0.0	0.0	0.0	0.0	0.0	0.0	0.0	0.0	0.0	0.0
%ile BackOfQ(50%),veh/ln	1.6	0.3	0.3	1.9	27.2	29.1	8.4	5.9	5.6	2.6	0.5	0.9
LnGrp Delay(d),s/veh	22.4	0.9	0.9	7.6	20.8	21.2	63.5	69.4	61.5	67.9	71.8	67.5
LnGrp LOS	C	A	A	A	C	C	E	E	E	E	E	E
Approach Vol, veh/h		1032			2022			489			98	
Approach Delay, s/veh		2.5			20.1			64.6			68.2	
Approach LOS		A			C			E			E	

Timer	1	2	3	4	5	6	7	8
Assigned Phs	1	2	3	4	5	6	7	8
Phs Duration (G+Y+Rc), s	11.4	104.2	24.0	10.4	10.2	105.5	12.0	22.4
Change Period (Y+Rc), s	5.4	5.4	5.4	5.4	5.4	5.4	5.4	5.4
Max Green Setting (Gmax), s	11.4	90.7	20.6	5.7	8.6	93.5	6.6	19.7
Max Q Clear Time (g_c+I1), s	5.9	2.0	18.4	4.0	4.1	57.5	7.3	14.4
Green Ext Time (p_c), s	0.1	49.5	0.1	0.2	0.0	27.5	0.0	0.6

Intersection Summary	
HCM 2010 Ctrl Delay	22.4
HCM 2010 LOS	C

Movement	EBL	EBT	WBT	WBR	SBL	SBR
Lane Configurations						
Traffic Volume (veh/h)	180	1670	2620	460	280	70
Future Volume (veh/h)	180	1670	2620	460	280	70
Number	5	2	6	16	7	14
Initial Q (Qb), veh	0	0	0	0	0	0
Ped-Bike Adj(A_pbT)	1.00			1.00	1.00	1.00
Parking Bus, Adj	1.00	1.00	1.00	1.00	1.00	1.00
Adj Sat Flow, veh/h/ln	1863	1863	1863	1900	1863	1863
Adj Flow Rate, veh/h	196	1815	2848	500	304	76
Adj No. of Lanes	1	3	3	0	2	1
Peak Hour Factor	0.92	0.92	0.92	0.92	0.92	0.92
Percent Heavy Veh, %	2	2	2	2	2	2
Cap, veh/h	215	4205	3068	510	348	160
Arrive On Green	0.19	1.00	0.70	0.70	0.10	0.10
Sat Flow, veh/h	1774	5253	4562	730	3442	1583
Grp Volume(v), veh/h	196	1815	2161	1187	304	76
Grp Sat Flow(s),veh/h/ln	1774	1695	1695	1734	1721	1583
Q Serve(g_s), s	11.9	0.0	79.5	98.3	13.1	6.8
Cycle Q Clear(g_c), s	11.9	0.0	79.5	98.3	13.1	6.8
Prop In Lane	1.00			0.42	1.00	1.00
Lane Grp Cap(c), veh/h	215	4205	2367	1211	348	160
V/C Ratio(X)	0.91	0.43	0.91	0.98	0.87	0.48
Avail Cap(c_a), veh/h	225	4205	2367	1211	358	165
HCM Platoon Ratio	2.00	2.00	1.00	1.00	1.00	1.00
Upstream Filter(I)	0.89	0.89	0.09	0.09	1.00	1.00
Uniform Delay (d), s/veh	51.2	0.0	18.8	21.7	66.5	63.7
Incr Delay (d2), s/veh	33.4	0.3	0.7	4.5	20.3	2.2
Initial Q Delay(d3),s/veh	0.0	0.0	0.0	0.0	0.0	0.0
%ile BackOfQ(50%),veh/ln	9.8	0.1	37.1	48.0	7.2	6.1
LnGrp Delay(d),s/veh	84.6	0.3	19.5	26.1	86.8	65.9
LnGrp LOS	F	A	B	C	F	E
Approach Vol, veh/h		2011	3348		380	
Approach Delay, s/veh		8.5	21.9		82.6	
Approach LOS		A	C		F	

Timer	1	2	3	4	5	6	7	8
Assigned Phs		2		4	5	6		
Phs Duration (G+Y+Rc), s		129.4		20.6	19.3	110.1		
Change Period (Y+Rc), s		5.4		5.4	5.4	5.4		
Max Green Setting (Gmax), s		123.6		15.6	14.8	103.4		
Max Q Clear Time (g_c+I1), s		2.0		15.1	13.9	100.3		
Green Ext Time (p_c), s		118.7		0.1	0.1	3.1		

Intersection Summary	
HCM 2010 Ctrl Delay	21.2
HCM 2010 LOS	C

Movement	EBT	EBR	WBL	WBT	NBL	NBR
Lane Configurations						
Traffic Volume (veh/h)	1650	70	50	2640	10	110
Future Volume (veh/h)	1650	70	50	2640	10	110
Number	2	12	1	6	3	18
Initial Q (Qb), veh	0	0	0	0	0	0
Ped-Bike Adj(A_pbT)		1.00	1.00		1.00	1.00
Parking Bus, Adj	1.00	1.00	1.00	1.00	1.00	1.00
Adj Sat Flow, veh/h/ln	1863	1900	1863	1863	1863	1863
Adj Flow Rate, veh/h	1793	76	54	2870	11	120
Adj No. of Lanes	3	0	1	3	1	2
Peak Hour Factor	0.92	0.92	0.92	0.92	0.92	0.92
Percent Heavy Veh, %	2	2	2	2	2	2
Cap, veh/h	4033	171	297	4434	100	156
Arrive On Green	1.00	1.00	0.03	0.87	0.06	0.06
Sat Flow, veh/h	5171	212	1774	5253	1774	2787
Grp Volume(v), veh/h	1214	655	54	2870	11	120
Grp Sat Flow(s),veh/h/ln	1695	1825	1774	1695	1774	1393
Q Serve(g_s), s	0.0	0.0	0.7	24.9	0.9	6.4
Cycle Q Clear(g_c), s	0.0	0.0	0.7	24.9	0.9	6.4
Prop In Lane		0.12	1.00		1.00	1.00
Lane Grp Cap(c), veh/h	2733	1471	297	4434	100	156
V/C Ratio(X)	0.44	0.45	0.18	0.65	0.11	0.77
Avail Cap(c_a), veh/h	2733	1471	358	4434	125	197
HCM Platoon Ratio	2.00	2.00	1.00	1.00	1.00	1.00
Upstream Filter(I)	0.86	0.86	0.21	0.21	1.00	1.00
Uniform Delay (d), s/veh	0.0	0.0	1.8	2.8	67.2	69.8
Incr Delay (d2), s/veh	0.5	0.8	0.1	0.2	0.5	13.1
Initial Q Delay(d3),s/veh	0.0	0.0	0.0	0.0	0.0	0.0
%ile BackOfQ(50%),veh/ln	0.2	0.3	0.3	11.5	0.4	2.7
LnGrp Delay(d),s/veh	0.5	0.8	1.8	3.0	67.7	82.9
LnGrp LOS	A	A	A	A	E	F
Approach Vol, veh/h	1869			2924	131	
Approach Delay, s/veh	0.6			3.0	81.7	
Approach LOS	A			A	F	

Timer	1	2	3	4	5	6	7	8
Assigned Phs	1	2				6		8
Phs Duration (G+Y+Rc), s	9.9	126.3				136.2		13.8
Change Period (Y+Rc), s	5.4	5.4				5.4		5.4
Max Green Setting (Gmax), s	9.6	113.6				128.6		10.6
Max Q Clear Time (g_c+I1), s	2.7	2.0				26.9		8.4
Green Ext Time (p_c), s	0.0	106.3				97.3		0.1

Intersection Summary	
HCM 2010 Ctrl Delay	4.2
HCM 2010 LOS	A

HCM 2010 analysis supports speed limit in the range of 25 and 55 mph

Movement	EBL	EBT	WBT	WBR	SBL	SBR
Lane Configurations						
Traffic Volume (veh/h)	160	1410	2350	120	70	50
Future Volume (veh/h)	160	1410	2350	120	70	50
Number	5	2	6	16	7	14
Initial Q (Qb), veh	0	0	0	0	0	0
Ped-Bike Adj(A_pbT)	1.00			1.00	1.00	1.00
Parking Bus, Adj	1.00	1.00	1.00	1.00	1.00	1.00
Adj Sat Flow, veh/h/ln	1863	1863	1863	1900	1863	1863
Adj Flow Rate, veh/h	174	1533	2554	130	76	54
Adj No. of Lanes	1	3	3	0	1	1
Peak Hour Factor	0.92	0.92	0.92	0.92	0.92	0.92
Percent Heavy Veh, %	2	2	2	2	2	2
Cap, veh/h	199	4433	3889	196	100	89
Arrive On Green	0.05	0.87	0.78	0.78	0.06	0.06
Sat Flow, veh/h	1774	5253	5127	250	1774	1583
Grp Volume(v), veh/h	174	1533	1737	947	76	54
Grp Sat Flow(s),veh/h/ln	1774	1695	1695	1819	1774	1583
Q Serve(g_s), s	5.4	8.3	34.0	35.2	6.3	5.0
Cycle Q Clear(g_c), s	5.4	8.3	34.0	35.2	6.3	5.0
Prop In Lane	1.00			0.14	1.00	1.00
Lane Grp Cap(c), veh/h	199	4433	2659	1426	100	89
V/C Ratio(X)	0.87	0.35	0.65	0.66	0.76	0.61
Avail Cap(c_a), veh/h	367	4433	2659	1426	163	146
HCM Platoon Ratio	1.00	1.00	1.00	1.00	1.00	1.00
Upstream Filter(I)	1.00	1.00	0.57	0.57	1.00	1.00
Uniform Delay (d), s/veh	40.2	1.8	7.2	7.3	69.8	69.2
Incr Delay (d2), s/veh	11.2	0.2	0.3	0.7	11.3	6.5
Initial Q Delay(d3),s/veh	0.0	0.0	0.0	0.0	0.0	0.0
%ile BackOfQ(50%),veh/ln	7.7	3.9	15.8	17.6	3.4	4.5
LnGrp Delay(d),s/veh	51.4	2.0	7.5	8.0	81.0	75.6
LnGrp LOS	D	A	A	A	F	E
Approach Vol, veh/h		1707	2684		130	
Approach Delay, s/veh		7.0	7.7		78.8	
Approach LOS		A	A		E	

Timer	1	2	3	4	5	6	7	8
Assigned Phs		2		4	5	6		
Phs Duration (G+Y+Rc), s		136.2		13.8	13.1	123.0		
Change Period (Y+Rc), s		5.4		5.4	5.4	5.4		
Max Green Setting (Gmax), s		125.4		13.8	21.9	98.1		
Max Q Clear Time (g_c+I1), s		10.3		8.3	7.4	37.2		
Green Ext Time (p_c), s		102.1		0.1	0.4	57.1		

Intersection Summary	
HCM 2010 Ctrl Delay	9.5
HCM 2010 LOS	A

Movement	EBL	EBT	EBR	WBL	WBT	WBR	NBL	NBT	NBR	SBL	SBT	SBR
Lane Configurations												
Traffic Volume (veh/h)	90	720	90	210	1240	210	100	0	150	170	10	70
Future Volume (veh/h)	90	720	90	210	1240	210	100	0	150	170	10	70
Number	5	2	12	1	6	16	3	8	18	7	4	14
Initial Q (Qb), veh	0	0	0	0	0	0	0	0	0	0	0	0
Ped-Bike Adj(A_pbT)	1.00		1.00	1.00		1.00	1.00		1.00	1.00		1.00
Parking Bus, Adj	1.00	1.00	1.00	1.00	1.00	1.00	1.00	1.00	1.00	1.00	1.00	1.00
Adj Sat Flow, veh/h/ln	1863	1863	1900	1863	1863	1900	1900	1863	1900	1900	1863	1863
Adj Flow Rate, veh/h	98	783	98	228	1348	228	109	0	163	185	11	76
Adj No. of Lanes	1	2	0	1	2	0	0	2	0	0	1	1
Peak Hour Factor	0.92	0.92	0.92	0.92	0.92	0.92	0.92	0.92	0.92	0.92	0.92	0.92
Percent Heavy Veh, %	2	2	2	2	2	2	2	2	2	2	2	2
Cap, veh/h	183	1672	209	412	1708	286	114	0	419	281	14	460
Arrive On Green	0.04	0.53	0.53	0.07	0.56	0.56	0.29	0.00	0.29	0.29	0.29	0.29
Sat Flow, veh/h	1774	3166	396	1774	3035	508	226	0	1441	807	48	1583
Grp Volume(v), veh/h	98	438	443	228	780	796	109	0	163	196	0	76
Grp Sat Flow(s),veh/h/ln	1774	1770	1793	1774	1770	1773	226	0	1441	855	0	1583
Q Serve(g_s), s	3.8	23.3	23.3	8.6	51.7	53.4	7.5	0.0	13.6	22.5	0.0	5.4
Cycle Q Clear(g_c), s	3.8	23.3	23.3	8.6	51.7	53.4	43.6	0.0	13.6	36.1	0.0	5.4
Prop In Lane	1.00		0.22	1.00		0.29	1.00		1.00	0.94		1.00
Lane Grp Cap(c), veh/h	183	934	947	412	996	998	114	0	419	295	0	460
V/C Ratio(X)	0.53	0.47	0.47	0.55	0.78	0.80	0.96	0.00	0.39	0.66	0.00	0.17
Avail Cap(c_a), veh/h	240	934	947	534	996	998	114	0	419	295	0	460
HCM Platoon Ratio	1.00	1.00	1.00	1.00	1.00	1.00	1.00	1.00	1.00	1.00	1.00	1.00
Upstream Filter(I)	0.90	0.90	0.90	0.09	0.09	0.09	1.00	0.00	1.00	1.00	0.00	1.00
Uniform Delay (d), s/veh	26.0	22.2	22.2	16.2	25.6	26.0	72.7	0.0	42.6	57.0	0.0	39.6
Incr Delay (d2), s/veh	2.2	1.5	1.5	0.1	0.6	0.6	71.3	0.0	0.6	5.5	0.0	0.2
Initial Q Delay(d3),s/veh	0.0	0.0	0.0	0.0	0.0	0.0	0.0	0.0	0.0	0.0	0.0	0.0
%ile BackOfQ(50%),veh/ln	2.0	11.7	11.8	4.1	25.3	26.3	6.8	0.0	5.5	8.2	0.0	2.4
LnGrp Delay(d),s/veh	28.2	23.7	23.7	16.3	26.2	26.7	144.0	0.0	43.1	62.5	0.0	39.8
LnGrp LOS	C	C	C	B	C	C	F		D	E		D
Approach Vol, veh/h		979			1804			272			272	
Approach Delay, s/veh		24.2			25.1			83.5			56.1	
Approach LOS		C			C			F			E	

Timer	1	2	3	4	5	6	7	8
Assigned Phs	1	2		4	5	6		8
Phs Duration (G+Y+Rc), s	16.4	84.6		49.0	11.2	89.8		49.0
Change Period (Y+Rc), s	5.4	5.4		5.4	5.4	5.4		5.4
Max Green Setting (Gmax), s	21.3	68.9		43.6	10.6	79.6		43.6
Max Q Clear Time (g_c+I1), s	10.6	25.3		38.1	5.8	55.4		45.6
Green Ext Time (p_c), s	0.5	26.9		1.6	0.1	17.9		0.0

Intersection Summary	
HCM 2010 Ctrl Delay	32.2
HCM 2010 LOS	C

Movement	EBL	EBT	EBR	WBL	WBT	WBR	NBL	NBT	NBR	SBL	SBT	SBR
Lane Configurations												
Traffic Volume (veh/h)	80	600	80	200	940	200	20	100	130	130	100	20
Future Volume (veh/h)	80	600	80	200	940	200	20	100	130	130	100	20
Number	5	2	12	1	6	16	3	8	18	7	4	14
Initial Q (Qb), veh	0	0	0	0	0	0	0	0	0	0	0	0
Ped-Bike Adj(A_pbT)	1.00		1.00	1.00		1.00	1.00		1.00	1.00		1.00
Parking Bus, Adj	1.00	1.00	1.00	1.00	1.00	1.00	1.00	1.00	1.00	1.00	1.00	1.00
Adj Sat Flow, veh/h/ln	1863	1863	1900	1863	1863	1900	1863	1863	1900	1863	1863	1900
Adj Flow Rate, veh/h	87	652	87	217	1022	217	22	109	141	141	109	22
Adj No. of Lanes	1	2	0	1	2	0	1	1	0	1	1	0
Peak Hour Factor	0.92	0.92	0.92	0.92	0.92	0.92	0.92	0.92	0.92	0.92	0.92	0.92
Percent Heavy Veh, %	2	2	2	2	2	2	2	2	2	2	2	2
Cap, veh/h	264	1702	227	558	1674	355	290	124	160	212	339	68
Arrive On Green	0.07	1.00	1.00	0.07	0.58	0.58	0.02	0.17	0.17	0.08	0.23	0.23
Sat Flow, veh/h	1774	3140	418	1774	2908	616	1774	739	955	1774	1505	304
Grp Volume(v), veh/h	87	367	372	217	621	618	22	0	250	141	0	131
Grp Sat Flow(s),veh/h/ln	1774	1770	1789	1774	1770	1754	1774	0	1694	1774	0	1809
Q Serve(g_s), s	3.3	0.0	0.0	7.9	34.4	34.6	1.5	0.0	21.6	9.6	0.0	9.1
Cycle Q Clear(g_c), s	3.3	0.0	0.0	7.9	34.4	34.6	1.5	0.0	21.6	9.6	0.0	9.1
Prop In Lane	1.00		0.23	1.00		0.35	1.00		0.56	1.00		0.17
Lane Grp Cap(c), veh/h	264	959	970	558	1019	1010	290	0	284	212	0	407
V/C Ratio(X)	0.33	0.38	0.38	0.39	0.61	0.61	0.08	0.00	0.88	0.66	0.00	0.32
Avail Cap(c_a), veh/h	339	959	970	680	1019	1010	316	0	368	240	0	499
HCM Platoon Ratio	2.00	2.00	2.00	1.00	1.00	1.00	1.00	1.00	1.00	1.00	1.00	1.00
Upstream Filter(I)	0.96	0.96	0.96	0.61	0.61	0.61	1.00	0.00	1.00	1.00	0.00	1.00
Uniform Delay (d), s/veh	17.1	0.0	0.0	12.2	20.8	20.8	50.1	0.0	61.0	46.9	0.0	48.5
Incr Delay (d2), s/veh	0.7	1.1	1.1	0.3	1.7	1.7	0.1	0.0	17.5	5.7	0.0	0.5
Initial Q Delay(d3),s/veh	0.0	0.0	0.0	0.0	0.0	0.0	0.0	0.0	0.0	0.0	0.0	0.0
%ile BackOfQ(50%),veh/ln	1.7	0.3	0.3	3.8	17.2	17.1	0.8	0.0	11.5	5.0	0.0	4.6
LnGrp Delay(d),s/veh	17.8	1.1	1.1	12.5	22.4	22.5	50.2	0.0	78.5	52.6	0.0	49.0
LnGrp LOS	B	A	A	B	C	C	D		E	D		D
Approach Vol, veh/h		826			1456			272			272	
Approach Delay, s/veh		2.9			21.0			76.2			50.9	
Approach LOS		A			C			E			D	

Timer	1	2	3	4	5	6	7	8
Assigned Phs	1	2	3	4	5	6	7	8
Phs Duration (G+Y+Rc), s	15.7	86.7	8.4	39.2	10.7	91.8	17.0	30.5
Change Period (Y+Rc), s	5.4	5.4	5.4	5.4	5.4	5.4	5.4	5.4
Max Green Setting (Gmax), s	20.6	61.2	5.2	41.4	11.6	70.2	14.0	32.6
Max Q Clear Time (g_c+I1), s	9.9	2.0	3.5	11.1	5.3	36.6	11.6	23.6
Green Ext Time (p_c), s	0.4	21.0	0.0	2.5	0.1	17.0	0.1	1.5

Intersection Summary	
HCM 2010 Ctrl Delay	23.9
HCM 2010 LOS	C

Movement	EBT	EBR	WBL	WBT	NBL	NBR
Lane Configurations						
Traffic Volume (veh/h)	620	160	230	700	60	100
Future Volume (veh/h)	620	160	230	700	60	100
Number	2	12	1	6	3	18
Initial Q (Qb), veh	0	0	0	0	0	0
Ped-Bike Adj(A_pbT)		1.00	1.00		1.00	1.00
Parking Bus, Adj	1.00	1.00	1.00	1.00	1.00	1.00
Adj Sat Flow, veh/h/ln	1863	1900	1863	1863	1863	1863
Adj Flow Rate, veh/h	674	174	250	761	65	109
Adj No. of Lanes	2	0	1	2	1	1
Peak Hour Factor	0.92	0.92	0.92	0.92	0.92	0.92
Percent Heavy Veh, %	2	2	2	2	2	2
Cap, veh/h	2133	550	578	3002	142	200
Arrive On Green	0.77	0.77	0.05	0.85	0.08	0.08
Sat Flow, veh/h	2880	719	1774	3632	1774	1583
Grp Volume(v), veh/h	428	420	250	761	65	109
Grp Sat Flow(s),veh/h/ln	1770	1736	1774	1770	1774	1583
Q Serve(g_s), s	11.2	11.2	4.3	6.2	5.2	9.7
Cycle Q Clear(g_c), s	11.2	11.2	4.3	6.2	5.2	9.7
Prop In Lane		0.41	1.00		1.00	1.00
Lane Grp Cap(c), veh/h	1354	1329	578	3002	142	200
V/C Ratio(X)	0.32	0.32	0.43	0.25	0.46	0.54
Avail Cap(c_a), veh/h	1354	1329	951	3002	244	291
HCM Platoon Ratio	1.00	1.00	1.00	1.00	1.00	1.00
Upstream Filter(I)	1.00	1.00	0.72	0.72	1.00	1.00
Uniform Delay (d), s/veh	5.4	5.4	3.6	2.2	65.9	61.4
Incr Delay (d2), s/veh	0.6	0.6	0.4	0.0	2.3	2.3
Initial Q Delay(d3),s/veh	0.0	0.0	0.0	0.0	0.0	0.0
%ile BackOfQ(50%),veh/ln	5.7	5.6	2.1	3.0	2.7	4.4
LnGrp Delay(d),s/veh	6.1	6.1	4.0	2.2	68.2	63.7
LnGrp LOS	A	A	A	A	E	E
Approach Vol, veh/h	848			1011	174	
Approach Delay, s/veh	6.1			2.7	65.4	
Approach LOS	A			A	E	

Timer	1	2	3	4	5	6	7	8
Assigned Phs	1	2				6		8
Phs Duration (G+Y+Rc), s	12.4	120.2				132.6		17.4
Change Period (Y+Rc), s	5.4	5.4				5.4		5.4
Max Green Setting (Gmax), s	38.6	74.6				118.6		20.6
Max Q Clear Time (g_c+I1), s	6.3	13.2				8.2		11.7
Green Ext Time (p_c), s	0.7	15.2				15.8		0.3

Intersection Summary	
HCM 2010 Ctrl Delay	9.5
HCM 2010 LOS	A

Movement	EBL	EBT	EBR	WBL	WBT	WBR	NBL	NBT	NBR	SBL	SBT	SBR
Lane Configurations												
Traffic Volume (veh/h)	70	590	70	90	540	90	130	100	20	130	100	20
Future Volume (veh/h)	70	590	70	90	540	90	130	100	20	130	100	20
Number	5	2	12	1	6	16	3	8	18	7	4	14
Initial Q (Qb), veh	0	0	0	0	0	0	0	0	0	0	0	0
Ped-Bike Adj(A_pbT)	1.00		1.00	1.00		1.00	1.00		1.00	1.00		1.00
Parking Bus, Adj	1.00	1.00	1.00	1.00	1.00	1.00	1.00	1.00	1.00	1.00	1.00	1.00
Adj Sat Flow, veh/h/ln	1863	1863	1900	1863	1863	1900	1863	1863	1900	1863	1863	1900
Adj Flow Rate, veh/h	76	641	76	98	587	98	141	109	22	141	109	22
Adj No. of Lanes	1	1	0	1	1	0	1	1	0	1	1	0
Peak Hour Factor	0.92	0.92	0.92	0.92	0.92	0.92	0.92	0.92	0.92	0.92	0.92	0.92
Percent Heavy Veh, %	2	2	2	2	2	2	2	2	2	2	2	2
Cap, veh/h	387	987	117	368	940	157	322	341	69	322	341	69
Arrive On Green	0.60	0.60	0.60	0.60	0.60	0.60	0.23	0.23	0.23	0.23	0.23	0.23
Sat Flow, veh/h	754	1635	194	731	1557	260	1254	1505	304	1254	1505	304
Grp Volume(v), veh/h	76	0	717	98	0	685	141	0	131	141	0	131
Grp Sat Flow(s),veh/h/ln	754	0	1829	731	0	1817	1254	0	1809	1254	0	1809
Q Serve(g_s), s	4.5	0.0	16.3	6.4	0.0	15.2	6.7	0.0	3.8	6.7	0.0	3.8
Cycle Q Clear(g_c), s	19.8	0.0	16.3	22.7	0.0	15.2	10.6	0.0	3.8	10.6	0.0	3.8
Prop In Lane	1.00		0.11	1.00		0.14	1.00		0.17	1.00		0.17
Lane Grp Cap(c), veh/h	387	0	1104	368	0	1097	322	0	410	322	0	410
V/C Ratio(X)	0.20	0.00	0.65	0.27	0.00	0.62	0.44	0.00	0.32	0.44	0.00	0.32
Avail Cap(c_a), veh/h	603	0	1628	577	0	1618	483	0	643	483	0	643
HCM Platoon Ratio	1.00	1.00	1.00	1.00	1.00	1.00	1.00	1.00	1.00	1.00	1.00	1.00
Upstream Filter(I)	1.00	0.00	1.00	1.00	0.00	1.00	1.00	0.00	1.00	1.00	0.00	1.00
Uniform Delay (d), s/veh	14.3	0.0	8.2	15.6	0.0	8.0	24.9	0.0	20.5	24.9	0.0	20.5
Incr Delay (d2), s/veh	0.2	0.0	0.7	0.4	0.0	0.6	0.9	0.0	0.4	0.9	0.0	0.4
Initial Q Delay(d3),s/veh	0.0	0.0	0.0	0.0	0.0	0.0	0.0	0.0	0.0	0.0	0.0	0.0
%ile BackOfQ(50%),veh/ln	1.0	0.0	8.2	1.3	0.0	7.6	2.4	0.0	1.9	2.4	0.0	1.9
LnGrp Delay(d),s/veh	14.6	0.0	8.9	16.0	0.0	8.6	25.8	0.0	20.9	25.8	0.0	20.9
LnGrp LOS	B		A	B		A	C		C	C		C
Approach Vol, veh/h		793			783			272			272	
Approach Delay, s/veh		9.4			9.5			23.5			23.5	
Approach LOS		A			A			C			C	

Timer	1	2	3	4	5	6	7	8
Assigned Phs		2		4		6		8
Phs Duration (G+Y+Rc), s		43.8		19.8		43.8		19.8
Change Period (Y+Rc), s		5.4		5.4		5.4		5.4
Max Green Setting (Gmax), s		56.6		22.6		56.6		22.6
Max Q Clear Time (g_c+I1), s		21.8		12.6		24.7		12.6
Green Ext Time (p_c), s		14.2		1.8		13.7		1.8

Intersection Summary	
HCM 2010 Ctrl Delay	13.1
HCM 2010 LOS	B

Movement	EBL	EBT	EBR	WBL	WBT	WBR	NBL	NBT	NBR	SBL	SBT	SBR
Lane Configurations												
Traffic Volume (veh/h)	90	255	104	45	275	723	223	968	46	279	652	31
Future Volume (veh/h)	90	255	104	45	275	723	223	968	46	279	652	31
Number	5	2	12	1	6	16	3	8	18	7	4	14
Initial Q (Qb), veh	0	0	0	0	0	0	0	0	0	0	0	0
Ped-Bike Adj(A_pbT)	1.00		1.00	1.00		1.00	1.00		1.00	1.00		1.00
Parking Bus, Adj	1.00	1.00	1.00	1.00	1.00	1.00	1.00	1.00	1.00	1.00	1.00	1.00
Adj Sat Flow, veh/h/ln	1863	1863	1900	1863	1863	1863	1863	1863	1900	1863	1863	1900
Adj Flow Rate, veh/h	130	287	130	64	458	822	328	1088	58	328	724	48
Adj No. of Lanes	1	1	0	1	1	1	1	2	0	1	2	0
Peak Hour Factor	0.69	0.89	0.80	0.70	0.60	0.88	0.68	0.89	0.79	0.85	0.90	0.64
Percent Heavy Veh, %	2	2	2	2	2	2	2	2	2	2	2	2
Cap, veh/h	173	432	196	259	658	559	397	1062	57	325	1095	73
Arrive On Green	0.04	0.36	0.36	0.03	0.35	0.35	0.14	0.31	0.31	0.16	0.32	0.32
Sat Flow, veh/h	1774	1215	550	1774	1863	1583	1774	3418	182	1774	3370	223
Grp Volume(v), veh/h	130	0	417	64	458	822	328	563	583	328	380	392
Grp Sat Flow(s),veh/h/ln	1774	0	1766	1774	1863	1583	1774	1770	1831	1774	1770	1823
Q Serve(g_s), s	5.4	0.0	29.9	3.4	31.6	53.0	18.6	46.6	46.6	23.4	27.7	27.7
Cycle Q Clear(g_c), s	5.4	0.0	29.9	3.4	31.6	53.0	18.6	46.6	46.6	23.4	27.7	27.7
Prop In Lane	1.00		0.31	1.00		1.00	1.00		0.10	1.00		0.12
Lane Grp Cap(c), veh/h	173	0	628	259	658	559	397	550	569	325	575	593
V/C Ratio(X)	0.75	0.00	0.66	0.25	0.70	1.47	0.83	1.02	1.02	1.01	0.66	0.66
Avail Cap(c_a), veh/h	173	0	628	265	658	559	479	550	569	325	575	593
HCM Platoon Ratio	1.00	1.00	1.00	1.00	1.00	1.00	1.00	1.00	1.00	1.00	1.00	1.00
Upstream Filter(I)	1.00	0.00	1.00	1.00	1.00	1.00	1.00	1.00	1.00	1.00	1.00	1.00
Uniform Delay (d), s/veh	42.6	0.0	40.8	32.3	41.6	48.5	31.7	51.7	51.7	49.7	43.5	43.5
Incr Delay (d2), s/veh	16.6	0.0	2.6	0.5	3.2	220.8	9.7	44.7	44.2	52.5	2.8	2.7
Initial Q Delay(d3),s/veh	0.0	0.0	0.0	0.0	0.0	0.0	0.0	0.0	0.0	0.1	0.0	0.0
%ile BackOfQ(50%),veh/ln	4.2	0.0	15.1	1.7	16.9	57.5	10.2	29.6	30.5	18.2	14.0	14.4
LnGrp Delay(d),s/veh	59.2	0.0	43.4	32.8	44.8	269.3	41.4	96.4	95.9	102.3	46.3	46.3
LnGrp LOS	E		D	C	D	F	D	F	F	F	D	D
Approach Vol, veh/h		547			1344			1474			1100	
Approach Delay, s/veh		47.2			181.5			84.0			63.0	
Approach LOS		D			F			F			E	

Timer	1	2	3	4	5	6	7	8
Assigned Phs	1	2	3	4	5	6	7	8
Phs Duration (G+Y+Rc), s	10.5	58.7	26.7	54.1	10.8	58.4	28.8	52.0
Change Period (Y+Rc), s	5.4	5.4	5.4	5.4	5.4	5.4	5.4	5.4
Max Green Setting (Gmax), s	5.6	52.8	28.2	41.8	5.4	53.0	23.4	46.6
Max Q Clear Time (g_c+I1), s	5.4	31.9	20.6	29.7	7.4	55.0	25.4	48.6
Green Ext Time (p_c), s	0.0	9.4	0.6	8.8	0.0	0.0	0.0	0.0

Intersection Summary	
HCM 2010 Ctrl Delay	103.7
HCM 2010 LOS	F

Movement	EBL	EBT	EBR	WBL	WBT	WBR	NBL	NBT	NBR	SBL	SBT	SBR
Lane Configurations												
Traffic Volume (veh/h)	404	984	53	316	557	658	57	1456	478	315	1106	105
Future Volume (veh/h)	404	984	53	316	557	658	57	1456	478	315	1106	105
Number	5	2	12	1	6	16	3	8	18	7	4	14
Initial Q (Qb), veh	0	0	0	0	0	0	0	0	0	0	0	0
Ped-Bike Adj(A_pbT)	1.00		1.00	1.00		1.00	1.00		1.00	1.00		1.00
Parking Bus, Adj	1.00	1.00	1.00	1.00	1.00	1.00	1.00	1.00	1.00	1.00	1.00	1.00
Adj Sat Flow, veh/h/ln	1863	1863	1900	1863	1863	1863	1863	1863	1863	1863	1863	1900
Adj Flow Rate, veh/h	408	1118	71	385	785	739	84	1754	590	470	1286	119
Adj No. of Lanes	2	2	0	2	2	1	2	2	1	2	3	0
Peak Hour Factor	0.99	0.88	0.75	0.82	0.71	0.89	0.68	0.83	0.81	0.67	0.86	0.88
Percent Heavy Veh, %	2	2	2	2	2	2	2	2	2	2	2	2
Cap, veh/h	404	921	58	314	872	594	124	1318	734	443	2204	204
Arrive On Green	0.23	0.55	0.55	0.09	0.25	0.25	0.04	0.37	0.37	0.13	0.47	0.47
Sat Flow, veh/h	3442	3380	215	3442	3539	1583	3442	3539	1583	3442	4737	438
Grp Volume(v), veh/h	408	585	604	385	785	739	84	1754	590	470	920	485
Grp Sat Flow(s),veh/h/ln	1721	1770	1825	1721	1770	1583	1721	1770	1583	1721	1695	1785
Q Serve(g_s), s	18.8	43.6	43.6	14.6	34.4	32.9	3.9	59.6	36.4	20.6	31.9	31.9
Cycle Q Clear(g_c), s	18.8	43.6	43.6	14.6	34.4	32.9	3.9	59.6	36.4	20.6	31.9	31.9
Prop In Lane	1.00		0.12	1.00		1.00	1.00		1.00	1.00		0.25
Lane Grp Cap(c), veh/h	404	482	497	314	872	594	124	1318	734	443	1577	831
V/C Ratio(X)	1.01	1.21	1.21	1.23	0.90	1.24	0.68	1.33	0.80	1.06	0.58	0.58
Avail Cap(c_a), veh/h	404	482	497	314	872	594	179	1318	734	443	1577	831
HCM Platoon Ratio	2.00	2.00	2.00	1.00	1.00	1.00	1.00	1.00	1.00	1.00	1.00	1.00
Upstream Filter(I)	0.85	0.85	0.85	1.00	1.00	1.00	1.00	1.00	1.00	1.00	1.00	1.00
Uniform Delay (d), s/veh	61.2	36.4	36.4	72.7	58.4	31.5	76.2	50.2	36.7	69.7	31.4	31.4
Incr Delay (d2), s/veh	43.6	111.6	111.6	126.6	12.4	123.8	6.3	154.0	6.5	59.8	0.6	1.0
Initial Q Delay(d3),s/veh	0.0	0.0	0.0	0.0	0.0	0.0	0.0	0.0	0.0	0.0	0.0	0.0
%ile BackOfQ(50%),veh/ln	11.3	35.8	37.0	12.5	18.3	34.7	2.0	57.3	17.1	13.5	15.1	16.0
LnGrp Delay(d),s/veh	104.8	148.0	148.0	199.3	70.8	155.3	82.6	204.2	43.1	129.5	32.0	32.4
LnGrp LOS	F	F	F	F	E	F	F	F	D	F	C	C
Approach Vol, veh/h		1597			1909			2428			1875	
Approach Delay, s/veh		137.0			129.4			160.9			56.5	
Approach LOS		F			F			F			E	

Timer	1	2	3	4	5	6	7	8
Assigned Phs	1	2	3	4	5	6	7	8
Phs Duration (G+Y+Rc), s	20.0	49.0	11.2	79.8	24.2	44.8	26.0	65.0
Change Period (Y+Rc), s	5.4	5.4	5.4	5.4	5.4	5.4	5.4	5.4
Max Green Setting (Gmax), s	14.6	43.6	8.3	71.9	18.8	39.4	20.6	59.6
Max Q Clear Time (g_c+I1), s	16.6	45.6	5.9	33.9	20.8	36.4	22.6	61.6
Green Ext Time (p_c), s	0.0	0.0	0.0	15.2	0.0	2.4	0.0	0.0

Intersection Summary	
HCM 2010 Ctrl Delay	123.2
HCM 2010 LOS	F

Movement	EBL	EBT	EBR	WBL	WBT	WBR	NBL	NBT	NBR	SBL	SBT	SBR
Lane Configurations												
Traffic Volume (veh/h)	50	2090	50	190	1550	190	30	0	20	280	20	20
Future Volume (veh/h)	50	2090	50	190	1550	190	30	0	20	280	20	20
Number	5	2	12	1	6	16	3	8	18	7	4	14
Initial Q (Qb), veh	0	0	0	0	0	0	0	0	0	0	0	0
Ped-Bike Adj(A_pbT)	1.00		1.00	1.00		1.00	1.00		1.00	1.00		1.00
Parking Bus, Adj	1.00	1.00	1.00	1.00	1.00	1.00	1.00	1.00	1.00	1.00	1.00	1.00
Adj Sat Flow, veh/h/ln	1863	1863	1900	1863	1863	1900	1900	1863	1900	1863	1863	1863
Adj Flow Rate, veh/h	54	2272	54	207	1685	207	33	0	22	320	0	22
Adj No. of Lanes	1	3	0	1	3	0	0	1	0	2	0	1
Peak Hour Factor	0.92	0.92	0.92	0.92	0.92	0.92	0.92	0.92	0.92	0.92	0.92	0.92
Percent Heavy Veh, %	2	2	2	2	2	2	2	2	2	2	2	2
Cap, veh/h	219	3333	79	231	3195	391	36	0	24	375	0	167
Arrive On Green	0.03	0.65	0.65	0.07	0.70	0.70	0.04	0.00	0.04	0.11	0.00	0.11
Sat Flow, veh/h	1774	5110	121	1774	4592	562	1015	0	677	3548	0	1583
Grp Volume(v), veh/h	54	1505	821	207	1243	649	55	0	0	320	0	22
Grp Sat Flow(s),veh/h/ln	1774	1695	1841	1774	1695	1764	1692	0	0	1774	0	1583
Q Serve(g_s), s	1.6	44.4	44.8	9.1	28.2	28.4	5.2	0.0	0.0	14.2	0.0	2.0
Cycle Q Clear(g_c), s	1.6	44.4	44.8	9.1	28.2	28.4	5.2	0.0	0.0	14.2	0.0	2.0
Prop In Lane	1.00		0.07	1.00		0.32	0.60		0.40	1.00		1.00
Lane Grp Cap(c), veh/h	219	2211	1201	231	2359	1227	59	0	0	375	0	167
V/C Ratio(X)	0.25	0.68	0.68	0.90	0.53	0.53	0.93	0.00	0.00	0.85	0.00	0.13
Avail Cap(c_a), veh/h	248	2211	1201	365	2359	1227	59	0	0	523	0	234
HCM Platoon Ratio	1.00	1.00	1.00	1.00	1.00	1.00	1.00	1.00	1.00	1.00	1.00	1.00
Upstream Filter(I)	0.80	0.80	0.80	0.89	0.89	0.89	1.00	0.00	0.00	1.00	0.00	1.00
Uniform Delay (d), s/veh	10.3	17.4	17.5	41.6	11.7	11.7	77.0	0.0	0.0	70.3	0.0	64.9
Incr Delay (d2), s/veh	0.5	1.4	2.5	14.7	0.8	1.5	91.3	0.0	0.0	9.5	0.0	0.4
Initial Q Delay(d3),s/veh	0.0	0.0	0.0	0.0	0.0	0.0	0.0	0.0	0.0	0.0	0.0	0.0
%ile BackOfQ(50%),veh/ln	0.8	21.1	23.4	10.0	13.4	14.2	3.9	0.0	0.0	7.5	0.0	0.9
LnGrp Delay(d),s/veh	10.7	18.8	20.0	56.3	12.4	13.2	168.3	0.0	0.0	79.8	0.0	65.2
LnGrp LOS	B	B	C	E	B	B	F			E		E
Approach Vol, veh/h		2380			2099			55			342	
Approach Delay, s/veh		19.0			17.0			168.3			78.9	
Approach LOS		B			B			F			E	

Timer	1	2	3	4	5	6	7	8
Assigned Phs	1	2		4	5	6		8
Phs Duration (G+Y+Rc), s	16.9	109.7		22.3	9.9	116.7		11.0
Change Period (Y+Rc), s	5.4	5.4		5.4	5.4	5.4		5.4
Max Green Setting (Gmax), s	23.6	85.6		23.6	7.2	102.0		5.6
Max Q Clear Time (g_c+I1), s	11.1	46.8		16.2	3.6	30.4		7.2
Green Ext Time (p_c), s	0.4	36.9		0.7	0.0	65.5		0.0

Intersection Summary	
HCM 2010 Ctrl Delay	24.0
HCM 2010 LOS	C

Notes

User approved volume balancing among the lanes for turning movement.

Movement	EBL	EBT	EBR	WBL	WBT	WBR	NBL	NBT	NBR	SBL	SBT	SBR
Lane Configurations												
Traffic Volume (veh/h)	1402	1068	178	90	758	57	252	808	116	138	433	244
Future Volume (veh/h)	1402	1068	178	90	758	57	252	808	116	138	433	244
Number	5	2	12	1	6	16	3	8	18	7	4	14
Initial Q (Qb), veh	0	0	0	0	0	0	0	0	0	0	0	0
Ped-Bike Adj(A_pbT)	1.00		1.00	1.00		1.00	1.00		1.00	1.00		1.00
Parking Bus, Adj	1.00	1.00	1.00	1.00	1.00	1.00	1.00	1.00	1.00	1.00	1.00	1.00
Adj Sat Flow, veh/h/ln	1863	1863	1900	1863	1863	1863	1863	1863	1863	1863	1863	1863
Adj Flow Rate, veh/h	1669	1256	254	112	833	0	315	973	147	150	492	0
Adj No. of Lanes	2	2	0	1	2	1	1	2	1	1	2	1
Peak Hour Factor	0.84	0.85	0.70	0.80	0.91	0.78	0.80	0.83	0.79	0.92	0.88	0.83
Percent Heavy Veh, %	2	2	2	2	2	2	2	2	2	2	2	2
Cap, veh/h	1347	1588	318	219	743	332	260	787	449	118	522	234
Arrive On Green	0.39	0.54	0.54	0.06	0.21	0.00	0.12	0.22	0.22	0.04	0.15	0.00
Sat Flow, veh/h	3442	2940	588	1774	3539	1583	1774	3539	1583	1774	3539	1583
Grp Volume(v), veh/h	1669	751	759	112	833	0	315	973	147	150	492	0
Grp Sat Flow(s),veh/h/ln	1721	1770	1759	1774	1770	1583	1774	1770	1583	1774	1770	1583
Q Serve(g_s), s	62.6	54.2	55.9	7.9	33.6	0.0	18.6	35.6	11.7	6.6	22.0	0.0
Cycle Q Clear(g_c), s	62.6	54.2	55.9	7.9	33.6	0.0	18.6	35.6	11.7	6.6	22.0	0.0
Prop In Lane	1.00		0.33	1.00		1.00	1.00		1.00	1.00		1.00
Lane Grp Cap(c), veh/h	1347	956	950	219	743	332	260	787	449	118	522	234
V/C Ratio(X)	1.24	0.79	0.80	0.51	1.12	0.00	1.21	1.24	0.33	1.27	0.94	0.00
Avail Cap(c_a), veh/h	1347	956	950	226	743	332	260	787	449	118	522	234
HCM Platoon Ratio	1.00	1.00	1.00	1.00	1.00	1.00	1.00	1.00	1.00	1.00	1.00	1.00
Upstream Filter(I)	1.00	1.00	1.00	0.95	0.95	0.00	1.00	1.00	1.00	1.00	1.00	0.00
Uniform Delay (d), s/veh	48.7	29.4	29.8	45.4	63.2	0.0	52.3	62.2	45.2	63.3	67.5	0.0
Incr Delay (d2), s/veh	114.3	4.4	4.9	1.7	70.8	0.0	125.1	116.9	0.4	171.8	25.8	0.0
Initial Q Delay(d3),s/veh	0.0	0.0	0.0	0.0	0.0	0.0	0.0	0.0	0.0	0.0	0.0	0.0
%ile BackOfQ(50%),veh/ln	51.1	27.7	28.3	3.9	23.7	0.0	11.4	30.2	5.2	7.6	12.7	0.0
LnGrp Delay(d),s/veh	163.0	33.8	34.7	47.1	134.0	0.0	177.4	179.1	45.7	235.1	93.3	0.0
LnGrp LOS	F	C	C	D	F		F	F	D	F	F	
Approach Vol, veh/h		3179			945			1435			642	
Approach Delay, s/veh		101.8			123.7			165.1			126.4	
Approach LOS		F			F			F			F	

Timer	1	2	3	4	5	6	7	8
Assigned Phs	1	2	3	4	5	6	7	8
Phs Duration (G+Y+Rc), s	15.2	91.8	24.0	29.0	68.0	39.0	12.0	41.0
Change Period (Y+Rc), s	5.4	5.4	5.4	5.4	5.4	5.4	5.4	5.4
Max Green Setting (Gmax), s	10.4	85.8	18.6	23.6	62.6	33.6	6.6	35.6
Max Q Clear Time (g_c+I1), s	9.9	57.9	20.6	24.0	64.6	35.6	8.6	37.6
Green Ext Time (p_c), s	0.0	19.5	0.0	0.0	0.0	0.0	0.0	0.0

Intersection Summary	
HCM 2010 Ctrl Delay	122.3
HCM 2010 LOS	F

Movement	EBL	EBT	EBR	WBL	WBT	WBR	NBL	NBT	NBR	SBL	SBT	SBR
Lane Configurations												
Traffic Volume (veh/h)	0	1195	176	171	810	0	0	0	0	295	15	5
Future Volume (veh/h)	0	1195	176	171	810	0	0	0	0	295	15	5
Number	5	2	12	1	6	16				7	4	14
Initial Q (Qb), veh	0	0	0	0	0	0				0	0	0
Ped-Bike Adj(A_pbT)	1.00		1.00	1.00		1.00				1.00		1.00
Parking Bus, Adj	1.00	1.00	1.00	1.00	1.00	1.00				1.00	1.00	1.00
Adj Sat Flow, veh/h/ln	0	1863	1863	1863	1863	0				1863	1863	1863
Adj Flow Rate, veh/h	0	1285	0	180	942	0				354	0	0
Adj No. of Lanes	0	4	1	2	2	0				2	0	1
Peak Hour Factor	1.00	0.93	0.85	0.95	0.86	1.00				0.87	0.70	0.25
Percent Heavy Veh, %	0	2	2	2	2	0				2	2	2
Cap, veh/h	0	4573	1130	230	2882	0				420	0	187
Arrive On Green	0.00	0.71	0.00	0.07	0.81	0.00				0.12	0.00	0.00
Sat Flow, veh/h	0	6669	1583	3442	3632	0				3548	0	1583
Grp Volume(v), veh/h	0	1285	0	180	942	0				354	0	0
Grp Sat Flow(s),veh/h/ln	0	1602	1583	1721	1770	0				1774	0	1583
Q Serve(g_s), s	0.0	11.5	0.0	8.2	10.8	0.0				15.6	0.0	0.0
Cycle Q Clear(g_c), s	0.0	11.5	0.0	8.2	10.8	0.0				15.6	0.0	0.0
Prop In Lane	0.00		1.00	1.00		0.00				1.00		1.00
Lane Grp Cap(c), veh/h	0	4573	1130	230	2882	0				420	0	187
V/C Ratio(X)	0.00	0.28	0.00	0.78	0.33	0.00				0.84	0.00	0.00
Avail Cap(c_a), veh/h	0	4573	1130	551	2882	0				1078	0	481
HCM Platoon Ratio	1.00	1.00	1.00	1.00	1.00	1.00				1.00	1.00	1.00
Upstream Filter(I)	0.00	0.51	0.00	0.89	0.89	0.00				1.00	0.00	0.00
Uniform Delay (d), s/veh	0.0	8.2	0.0	73.5	3.8	0.0				69.1	0.0	0.0
Incr Delay (d2), s/veh	0.0	0.1	0.0	5.1	0.3	0.0				4.7	0.0	0.0
Initial Q Delay(d3),s/veh	0.0	0.0	0.0	0.0	0.0	0.0				0.0	0.0	0.0
%ile BackOfQ(50%),veh/ln	0.0	5.1	0.0	4.1	5.3	0.0				7.9	0.0	0.0
LnGrp Delay(d),s/veh	0.0	8.3	0.0	78.6	4.0	0.0				73.8	0.0	0.0
LnGrp LOS		A		E	A					E		
Approach Vol, veh/h		1285			1122						354	
Approach Delay, s/veh		8.3			16.0						73.8	
Approach LOS		A			B						E	

Timer	1	2	3	4	5	6	7	8
Assigned Phs	1	2		4		6		
Phs Duration (G+Y+Rc), s	16.1	119.6		24.3		135.7		
Change Period (Y+Rc), s	5.4	5.4		5.4		5.4		
Max Green Setting (Gmax), s	25.6	69.6		48.6		100.6		
Max Q Clear Time (g_c+I1), s	10.2	13.5		17.6		12.8		
Green Ext Time (p_c), s	0.5	27.4		1.3		32.0		

Intersection Summary	
HCM 2010 Ctrl Delay	19.8
HCM 2010 LOS	B

Notes

User approved volume balancing among the lanes for turning movement.

Movement	EBL	EBT	EBR	WBL	WBT	WBR	NBL	NBT	NBR	SBL	SBT	SBR
Lane Configurations												
Traffic Volume (veh/h)	230	1249	0	0	849	564	161	73	178	0	0	0
Future Volume (veh/h)	230	1249	0	0	849	564	161	73	178	0	0	0
Number	5	2	12	1	6	16	3	8	18			
Initial Q (Qb), veh	0	0	0	0	0	0	0	0	0			
Ped-Bike Adj(A_pbT)	1.00		1.00	1.00		1.00	1.00		1.00			
Parking Bus, Adj	1.00	1.00	1.00	1.00	1.00	1.00	1.00	1.00	1.00			
Adj Sat Flow, veh/h/ln	1863	1863	0	0	1863	1900	1863	1863	1863			
Adj Flow Rate, veh/h	307	1419	0	0	894	0	233	79	0			
Adj No. of Lanes	2	2	0	0	4	0	2	1	1			
Peak Hour Factor	0.75	0.88	1.00	1.00	0.95	0.85	0.69	0.92	0.81			
Percent Heavy Veh, %	2	2	0	0	2	2	2	2	2			
Cap, veh/h	1261	3000	0	0	2868	0	301	158	134			
Arrive On Green	0.49	1.00	0.00	0.00	0.45	0.00	0.08	0.08	0.00			
Sat Flow, veh/h	3442	3632	0	0	6929	0	3548	1863	1583			
Grp Volume(v), veh/h	307	1419	0	0	894	0	233	79	0			
Grp Sat Flow(s),veh/h/ln	1721	1770	0	0	1602	0	1774	1863	1583			
Q Serve(g_s), s	8.3	0.0	0.0	0.0	14.3	0.0	10.3	6.5	0.0			
Cycle Q Clear(g_c), s	8.3	0.0	0.0	0.0	14.3	0.0	10.3	6.5	0.0			
Prop In Lane	1.00		0.00	0.00		0.00	1.00		1.00			
Lane Grp Cap(c), veh/h	1261	3000	0	0	2868	0	301	158	134			
V/C Ratio(X)	0.24	0.47	0.00	0.00	0.31	0.00	0.77	0.50	0.00			
Avail Cap(c_a), veh/h	1261	3000	0	0	2868	0	945	496	422			
HCM Platoon Ratio	1.33	1.33	1.00	1.00	1.00	1.00	1.00	1.00	1.00			
Upstream Filter(I)	0.94	0.94	0.00	0.00	1.00	0.00	1.00	1.00	0.00			
Uniform Delay (d), s/veh	28.1	0.0	0.0	0.0	28.4	0.0	71.7	70.0	0.0			
Incr Delay (d2), s/veh	0.1	0.5	0.0	0.0	0.3	0.0	4.3	2.4	0.0			
Initial Q Delay(d3),s/veh	0.0	0.0	0.0	0.0	0.0	0.0	0.0	0.0	0.0			
%ile BackOfQ(50%),veh/ln	3.9	0.2	0.0	0.0	6.4	0.0	5.2	3.4	0.0			
LnGrp Delay(d),s/veh	28.2	0.5	0.0	0.0	28.7	0.0	76.0	72.4	0.0			
LnGrp LOS	C	A			C		E	E				
Approach Vol, veh/h		1726			894			312				
Approach Delay, s/veh		5.4			28.7			75.1				
Approach LOS		A			C			E				

Timer	1	2	3	4	5	6	7	8
Assigned Phs		2			5	6		8
Phs Duration (G+Y+Rc), s		141.0			64.0	77.0		19.0
Change Period (Y+Rc), s		5.4			5.4	5.4		5.4
Max Green Setting (Gmax), s		106.6			29.6	71.6		42.6
Max Q Clear Time (g_c+I1), s		2.0			10.3	16.3		12.3
Green Ext Time (p_c), s		19.0			11.2	6.8		1.3

Intersection Summary	
HCM 2010 Ctrl Delay	19.9
HCM 2010 LOS	B

Notes

User approved volume balancing among the lanes for turning movement.

User approved ignoring U-Turning movement.

Movement	EBL	EBT	EBR	WBL	WBT	WBR	NBL	NBT	NBR	SBL	SBT	SBR
Lane Configurations												
Traffic Volume (veh/h)	129	1071	150	98	831	68	335	358	140	101	223	133
Future Volume (veh/h)	129	1071	150	98	831	68	335	358	140	101	223	133
Number	5	2	12	1	6	16	3	8	18	7	4	14
Initial Q (Qb), veh	0	0	0	0	0	0	0	0	0	0	0	0
Ped-Bike Adj(A_pbT)	1.00		1.00	1.00		1.00	1.00		1.00	1.00		1.00
Parking Bus, Adj	1.00	1.00	1.00	1.00	1.00	1.00	1.00	1.00	1.00	1.00	1.00	1.00
Adj Sat Flow, veh/h/ln	1863	1863	1900	1863	1863	1900	1863	1863	1863	1863	1863	1863
Adj Flow Rate, veh/h	195	1190	195	134	944	69	394	421	173	142	232	190
Adj No. of Lanes	1	2	0	1	2	0	1	1	1	1	1	1
Peak Hour Factor	0.66	0.90	0.77	0.73	0.88	0.98	0.85	0.85	0.81	0.71	0.96	0.70
Percent Heavy Veh, %	2	2	2	2	2	2	2	2	2	2	2	2
Cap, veh/h	305	1433	234	190	1507	110	416	521	527	211	269	344
Arrive On Green	0.07	0.47	0.47	0.05	0.45	0.45	0.20	0.28	0.28	0.06	0.14	0.14
Sat Flow, veh/h	1774	3048	497	1774	3345	244	1774	1863	1583	1774	1863	1583
Grp Volume(v), veh/h	195	689	696	134	499	514	394	421	173	142	232	190
Grp Sat Flow(s),veh/h/ln	1774	1770	1775	1774	1770	1820	1774	1863	1583	1774	1863	1583
Q Serve(g_s), s	9.4	54.0	54.8	6.5	34.6	34.6	29.5	33.7	13.1	9.9	19.5	17.1
Cycle Q Clear(g_c), s	9.4	54.0	54.8	6.5	34.6	34.6	29.5	33.7	13.1	9.9	19.5	17.1
Prop In Lane	1.00		0.28	1.00		0.13	1.00		1.00	1.00		1.00
Lane Grp Cap(c), veh/h	305	832	834	190	797	820	416	521	527	211	269	344
V/C Ratio(X)	0.64	0.83	0.83	0.71	0.63	0.63	0.95	0.81	0.33	0.67	0.86	0.55
Avail Cap(c_a), veh/h	381	832	834	234	797	820	417	539	543	211	286	359
HCM Platoon Ratio	1.00	1.00	1.00	1.00	1.00	1.00	1.00	1.00	1.00	1.00	1.00	1.00
Upstream Filter(I)	1.00	1.00	1.00	0.92	0.92	0.92	1.00	1.00	1.00	1.00	1.00	1.00
Uniform Delay (d), s/veh	26.2	36.8	37.0	33.7	33.7	33.7	44.8	53.7	39.9	56.6	66.9	55.7
Incr Delay (d2), s/veh	2.4	9.3	9.6	6.5	3.4	3.3	30.7	8.7	0.4	8.0	21.8	1.7
Initial Q Delay(d3),s/veh	0.0	0.0	0.0	0.0	0.0	0.0	0.0	0.0	0.0	0.0	0.0	0.0
%ile BackOfQ(50%),veh/ln	4.8	28.5	28.9	3.5	17.7	18.2	17.9	18.6	5.8	1.7	11.7	7.6
LnGrp Delay(d),s/veh	28.6	46.1	46.6	40.3	37.1	37.0	75.5	62.4	40.3	64.6	88.7	57.3
LnGrp LOS	C	D	D	D	D	D	E	E	D	E	F	E
Approach Vol, veh/h		1580			1147			988			564	
Approach Delay, s/veh		44.2			37.4			63.7			72.1	
Approach LOS		D			D			E			E	

Timer	1	2	3	4	5	6	7	8
Assigned Phs	1	2	3	4	5	6	7	8
Phs Duration (G+Y+Rc), s	14.0	80.6	36.9	28.5	17.1	77.5	15.3	50.1
Change Period (Y+Rc), s	5.4	5.4	5.4	5.4	5.4	5.4	5.4	5.4
Max Green Setting (Gmax), s	12.6	69.6	31.6	24.6	18.6	63.6	9.9	46.3
Max Q Clear Time (g_c+I1), s	8.5	56.8	31.5	21.5	11.4	36.6	11.9	35.7
Green Ext Time (p_c), s	0.1	10.3	0.0	1.6	0.3	18.2	0.0	4.0

Intersection Summary	
HCM 2010 Ctrl Delay	50.5
HCM 2010 LOS	D

Movement	EBL	EBT	WBT	WBR	SBL	SBR
Lane Configurations						
Traffic Volume (veh/h)	27	1326	933	75	127	59
Future Volume (veh/h)	27	1326	933	75	127	59
Number	5	2	6	16	7	14
Initial Q (Qb), veh	0	0	0	0	0	0
Ped-Bike Adj(A_pbT)	1.00			1.00	1.00	1.00
Parking Bus, Adj	1.00	1.00	1.00	1.00	1.00	1.00
Adj Sat Flow, veh/h/ln	1863	1863	1863	1900	1863	1863
Adj Flow Rate, veh/h	35	1579	1037	134	163	79
Adj No. of Lanes	1	2	2	0	1	1
Peak Hour Factor	0.78	0.84	0.90	0.56	0.78	0.75
Percent Heavy Veh, %	2	2	2	2	2	2
Cap, veh/h	398	2922	2604	336	190	169
Arrive On Green	1.00	1.00	0.83	0.83	0.11	0.11
Sat Flow, veh/h	477	3632	3247	407	1774	1583
Grp Volume(v), veh/h	35	1579	582	589	163	79
Grp Sat Flow(s),veh/h/ln	477	1770	1770	1791	1774	1583
Q Serve(g_s), s	1.3	0.0	13.7	13.7	14.5	7.5
Cycle Q Clear(g_c), s	15.0	0.0	13.7	13.7	14.5	7.5
Prop In Lane	1.00			0.23	1.00	1.00
Lane Grp Cap(c), veh/h	398	2922	1461	1479	190	169
V/C Ratio(X)	0.09	0.54	0.40	0.40	0.86	0.47
Avail Cap(c_a), veh/h	398	2922	1461	1479	373	332
HCM Platoon Ratio	2.00	2.00	1.00	1.00	1.00	1.00
Upstream Filter(I)	0.50	0.50	0.93	0.93	1.00	1.00
Uniform Delay (d), s/veh	0.8	0.0	3.6	3.6	70.3	67.2
Incr Delay (d2), s/veh	0.2	0.4	0.2	0.2	10.8	2.0
Initial Q Delay(d3),s/veh	0.0	0.0	0.0	0.0	0.0	0.0
%ile BackOfQ(50%),veh/ln	0.2	0.1	6.7	6.8	7.7	3.4
LnGrp Delay(d),s/veh	1.0	0.4	3.8	3.8	81.0	69.2
LnGrp LOS	A	A	A	A	F	E
Approach Vol, veh/h		1614	1171		242	
Approach Delay, s/veh		0.4	3.8		77.2	
Approach LOS		A	A		E	

Timer	1	2	3	4	5	6	7	8
Assigned Phs		2		4		6		
Phs Duration (G+Y+Rc), s		137.5		22.5		137.5		
Change Period (Y+Rc), s		5.4		5.4		5.4		
Max Green Setting (Gmax), s		115.6		33.6		115.6		
Max Q Clear Time (g_c+I1), s		17.0		16.5		15.7		
Green Ext Time (p_c), s		50.7		0.6		51.0		

Intersection Summary	
HCM 2010 Ctrl Delay	7.8
HCM 2010 LOS	A

Movement	EBL	EBT	EBR	WBL	WBT	WBR	NBL	NBT	NBR	SBL	SBT	SBR
Lane Configurations												
Traffic Volume (veh/h)	539	1063	43	8	647	71	8	4	6	54	3	73
Future Volume (veh/h)	539	1063	43	8	647	71	8	4	6	54	3	73
Number	5	2	12	1	6	16	3	8	18	7	4	14
Initial Q (Qb), veh	0	0	0	0	0	0	0	0	0	0	0	0
Ped-Bike Adj(A_pbT)	1.00		1.00	1.00		1.00	1.00		1.00	1.00		1.00
Parking Bus, Adj	1.00	1.00	1.00	1.00	1.00	1.00	1.00	1.00	1.00	1.00	1.00	1.00
Adj Sat Flow, veh/h/ln	1863	1863	1900	1863	1863	1900	1900	1863	1863	1900	1863	1863
Adj Flow Rate, veh/h	592	1107	67	12	703	97	12	12	8	75	8	91
Adj No. of Lanes	1	2	0	1	2	0	0	1	1	0	1	1
Peak Hour Factor	0.91	0.96	0.64	0.67	0.92	0.73	0.67	0.33	0.75	0.72	0.38	0.80
Percent Heavy Veh, %	2	2	2	2	2	2	2	2	2	2	2	2
Cap, veh/h	666	2924	177	390	2263	312	84	73	111	137	10	276
Arrive On Green	0.10	0.86	0.86	0.72	0.72	0.72	0.07	0.07	0.07	0.07	0.07	0.07
Sat Flow, veh/h	1774	3391	205	476	3125	431	714	1039	1583	1348	144	1583
Grp Volume(v), veh/h	592	577	597	12	398	402	24	0	8	83	0	91
Grp Sat Flow(s),veh/h/ln	1774	1770	1827	476	1770	1787	1753	0	1583	1492	0	1583
Q Serve(g_s), s	12.7	10.7	10.7	1.1	12.8	12.8	0.0	0.0	0.8	6.7	0.0	8.1
Cycle Q Clear(g_c), s	12.7	10.7	10.7	1.1	12.8	12.8	1.9	0.0	0.8	8.7	0.0	8.1
Prop In Lane	1.00		0.11	1.00		0.24	0.50		1.00	0.90		1.00
Lane Grp Cap(c), veh/h	666	1526	1575	390	1281	1294	157	0	111	148	0	276
V/C Ratio(X)	0.89	0.38	0.38	0.03	0.31	0.31	0.15	0.00	0.07	0.56	0.00	0.33
Avail Cap(c_a), veh/h	1242	1526	1575	390	1281	1294	250	0	204	231	0	369
HCM Platoon Ratio	1.00	1.00	1.00	1.00	1.00	1.00	1.00	1.00	1.00	1.00	1.00	1.00
Upstream Filter(I)	0.78	0.78	0.78	1.00	1.00	1.00	1.00	0.00	1.00	1.00	0.00	1.00
Uniform Delay (d), s/veh	8.5	2.3	2.3	6.2	7.9	7.9	70.1	0.0	69.5	73.0	0.0	57.8
Incr Delay (d2), s/veh	3.4	0.6	0.5	0.1	0.6	0.6	0.4	0.0	0.3	3.3	0.0	0.7
Initial Q Delay(d3),s/veh	0.0	0.0	0.0	0.0	0.0	0.0	0.0	0.0	0.0	0.0	0.0	0.0
%ile BackOfQ(50%),veh/ln	18.9	5.4	5.5	0.2	6.4	6.5	1.0	0.0	0.3	3.8	0.0	3.6
LnGrp Delay(d),s/veh	11.9	2.8	2.8	6.4	8.5	8.5	70.5	0.0	69.8	76.4	0.0	58.5
LnGrp LOS	B	A	A	A	A	A	E		E	E		E
Approach Vol, veh/h		1766			812			32			174	
Approach Delay, s/veh		5.9			8.5			70.3			67.0	
Approach LOS		A			A			E			E	

Timer	1	2	3	4	5	6	7	8
Assigned Phs		2		4	5	6		8
Phs Duration (G+Y+Rc), s		143.4		16.6	22.1	121.3		16.6
Change Period (Y+Rc), s		5.4		5.4	5.4	5.4		5.4
Max Green Setting (Gmax), s		128.6		20.6	68.6	54.6		20.6
Max Q Clear Time (g_c+I1), s		12.7		10.7	14.7	14.8		3.9
Green Ext Time (p_c), s		21.4		0.6	2.0	17.4		0.8

Intersection Summary	
HCM 2010 Ctrl Delay	11.2
HCM 2010 LOS	B

Movement	EBL	EBT	EBR	WBL	WBT	WBR	NBL	NBT	NBR	SBL	SBT	SBR
Lane Configurations												
Traffic Volume (veh/h)	621	304	169	164	238	31	382	2464	107	85	1208	243
Future Volume (veh/h)	621	304	169	164	238	31	382	2464	107	85	1208	243
Number	5	2	12	1	6	16	3	8	18	7	4	14
Initial Q (Qb), veh	0	0	0	0	0	0	0	0	0	0	0	0
Ped-Bike Adj(A_pbT)	1.00		1.00	1.00		1.00	1.00		1.00	1.00		1.00
Parking Bus, Adj	1.00	1.00	1.00	1.00	1.00	1.00	1.00	1.00	1.00	1.00	1.00	1.00
Adj Sat Flow, veh/h/ln	1863	1863	1863	1863	1863	1900	1863	1863	1900	1863	1863	1863
Adj Flow Rate, veh/h	714	330	0	182	319	55	434	2678	141	96	1313	289
Adj No. of Lanes	2	1	1	1	2	0	2	3	0	1	3	1
Peak Hour Factor	0.87	0.92	0.71	0.79	0.84	0.56	0.88	0.92	0.76	0.89	0.92	0.84
Percent Heavy Veh, %	2	2	2	2	2	2	2	2	2	2	2	2
Cap, veh/h	772	405	344	193	337	58	489	2475	128	114	2017	628
Arrive On Green	0.07	0.07	0.00	0.11	0.11	0.11	0.14	0.50	0.50	0.04	0.40	0.40
Sat Flow, veh/h	3548	1863	1583	1774	3103	529	3442	4951	257	1774	5085	1583
Grp Volume(v), veh/h	714	330	0	182	190	184	434	1821	998	96	1313	289
Grp Sat Flow(s),veh/h/ln	1774	1863	1583	1774	1863	1769	1721	1695	1817	1774	1695	1583
Q Serve(g_s), s	32.0	27.9	0.0	16.3	16.2	16.5	19.8	80.0	80.0	5.2	33.6	21.6
Cycle Q Clear(g_c), s	32.0	27.9	0.0	16.3	16.2	16.5	19.8	80.0	80.0	5.2	33.6	21.6
Prop In Lane	1.00		1.00	1.00		0.30	1.00		0.14	1.00		1.00
Lane Grp Cap(c), veh/h	772	405	344	193	203	192	489	1695	909	114	2017	628
V/C Ratio(X)	0.93	0.81	0.00	0.94	0.94	0.96	0.89	1.07	1.10	0.84	0.65	0.46
Avail Cap(c_a), veh/h	772	405	344	193	203	192	611	1695	909	114	2017	628
HCM Platoon Ratio	0.33	0.33	0.33	1.00	1.00	1.00	1.00	1.00	1.00	1.00	1.00	1.00
Upstream Filter(I)	1.00	1.00	0.00	1.00	1.00	1.00	1.00	1.00	1.00	1.00	1.00	1.00
Uniform Delay (d), s/veh	73.0	71.1	0.0	70.8	70.8	70.9	67.4	40.0	40.0	39.5	39.3	35.6
Incr Delay (d2), s/veh	18.6	16.3	0.0	48.7	45.9	52.1	12.7	45.0	60.2	40.9	0.7	0.5
Initial Q Delay(d3),s/veh	0.0	0.0	0.0	0.0	0.0	0.0	0.0	0.0	0.0	0.0	0.0	0.0
%ile BackOfQ(50%),veh/ln	17.8	16.3	0.0	10.6	10.9	10.9	10.3	47.8	55.3	3.8	15.8	9.5
LnGrp Delay(d),s/veh	91.6	87.4	0.0	119.5	116.7	123.1	80.1	85.0	100.2	80.4	40.0	36.1
LnGrp LOS	F	F		F	F	F	F	F	F	F	D	D
Approach Vol, veh/h		1044			556			3253			1698	
Approach Delay, s/veh		90.2			119.7			89.0			41.6	
Approach LOS		F			F			F			D	

Timer	1	2	3	4	5	6	7	8
Assigned Phs		2	3	4		6	7	8
Phs Duration (G+Y+Rc), s		40.2	28.1	68.9		22.8	11.6	85.4
Change Period (Y+Rc), s		5.4	5.4	5.4		5.4	5.4	5.4
Max Green Setting (Gmax), s		34.8	28.4	57.8		17.4	6.2	80.0
Max Q Clear Time (g_c+I1), s		34.0	21.8	35.6		18.5	7.2	82.0
Green Ext Time (p_c), s		0.4	0.9	21.9		0.0	0.0	0.0

Intersection Summary	
HCM 2010 Ctrl Delay	79.5
HCM 2010 LOS	E

Notes

User approved volume balancing among the lanes for turning movement.

Movement	EBL	EBT	EBR	WBL	WBT	WBR	NBL	NBT	NBR	SBL	SBT	SBR
Lane Configurations												
Traffic Volume (veh/h)	132	468	28	10	363	59	38	104	11	38	44	32
Future Volume (veh/h)	132	468	28	10	363	59	38	104	11	38	44	32
Number	5	2	12	1	6	16	3	8	18	7	4	14
Initial Q (Qb), veh	0	0	0	0	0	0	0	0	0	0	0	0
Ped-Bike Adj(A_pbT)	1.00		1.00	1.00		1.00	1.00		1.00	1.00		1.00
Parking Bus, Adj	1.00	1.00	1.00	1.00	1.00	1.00	1.00	1.00	1.00	1.00	1.00	1.00
Adj Sat Flow, veh/h/ln	1863	1863	1900	1863	1863	1900	1863	1863	1900	1863	1863	1900
Adj Flow Rate, veh/h	171	585	33	12	412	80	56	137	20	44	60	48
Adj No. of Lanes	1	1	0	1	1	0	1	1	0	1	1	0
Peak Hour Factor	0.77	0.80	0.84	0.83	0.88	0.74	0.68	0.76	0.55	0.86	0.73	0.67
Percent Heavy Veh, %	2	2	2	2	2	2	2	2	2	2	2	2
Cap, veh/h	414	801	45	294	588	114	288	204	30	251	116	93
Arrive On Green	0.09	0.46	0.46	0.02	0.39	0.39	0.05	0.13	0.13	0.04	0.12	0.12
Sat Flow, veh/h	1774	1747	99	1774	1516	294	1774	1590	232	1774	960	768
Grp Volume(v), veh/h	171	0	618	12	0	492	56	0	157	44	0	108
Grp Sat Flow(s),veh/h/ln	1774	0	1845	1774	0	1811	1774	0	1822	1774	0	1727
Q Serve(g_s), s	3.3	0.0	16.6	0.2	0.0	13.9	1.6	0.0	5.0	1.3	0.0	3.6
Cycle Q Clear(g_c), s	3.3	0.0	16.6	0.2	0.0	13.9	1.6	0.0	5.0	1.3	0.0	3.6
Prop In Lane	1.00		0.05	1.00		0.16	1.00		0.13	1.00		0.44
Lane Grp Cap(c), veh/h	414	0	846	294	0	703	288	0	234	251	0	209
V/C Ratio(X)	0.41	0.00	0.73	0.04	0.00	0.70	0.19	0.00	0.67	0.17	0.00	0.52
Avail Cap(c_a), veh/h	560	0	1316	419	0	1143	362	0	437	327	0	403
HCM Platoon Ratio	1.00	1.00	1.00	1.00	1.00	1.00	1.00	1.00	1.00	1.00	1.00	1.00
Upstream Filter(I)	1.00	0.00	1.00	1.00	0.00	1.00	1.00	0.00	1.00	1.00	0.00	1.00
Uniform Delay (d), s/veh	11.0	0.0	13.4	12.2	0.0	15.6	21.7	0.0	25.3	22.0	0.0	25.1
Incr Delay (d2), s/veh	0.7	0.0	1.2	0.1	0.0	1.3	0.3	0.0	3.3	0.3	0.0	2.0
Initial Q Delay(d3),s/veh	0.0	0.0	0.0	0.0	0.0	0.0	0.0	0.0	0.0	0.0	0.0	0.0
%ile BackOfQ(50%),veh/ln	1.6	0.0	8.7	0.1	0.0	7.1	0.8	0.0	2.7	0.6	0.0	1.8
LnGrp Delay(d),s/veh	11.7	0.0	14.7	12.2	0.0	16.9	22.0	0.0	28.6	22.3	0.0	27.0
LnGrp LOS	B		B	B		B	C		C	C		C
Approach Vol, veh/h		789			504			213			152	
Approach Delay, s/veh		14.0			16.8			26.9			25.6	
Approach LOS		B			B			C			C	

Timer	1	2	3	4	5	6	7	8
Assigned Phs	1	2	3	4	5	6	7	8
Phs Duration (G+Y+Rc), s	6.3	33.3	8.5	12.8	10.6	29.0	8.0	13.2
Change Period (Y+Rc), s	5.4	5.4	5.4	5.4	5.4	5.4	5.4	5.4
Max Green Setting (Gmax), s	5.2	43.4	5.6	14.2	10.2	38.4	5.2	14.6
Max Q Clear Time (g_c+I1), s	2.2	18.6	3.6	5.6	5.3	15.9	3.3	7.0
Green Ext Time (p_c), s	0.0	8.0	0.0	0.9	0.2	7.7	0.0	0.8

Intersection Summary	
HCM 2010 Ctrl Delay	17.6
HCM 2010 LOS	B

Movement	EBL	EBT	EBR	WBL	WBT	WBR	NBL	NBT	NBR	SBL	SBT	SBR
Lane Configurations												
Traffic Volume (veh/h)	126	362	57	54	206	19	85	443	72	35	231	46
Future Volume (veh/h)	126	362	57	54	206	19	85	443	72	35	231	46
Number	5	2	12	1	6	16	3	8	18	7	4	14
Initial Q (Qb), veh	0	0	0	0	0	0	0	0	0	0	0	0
Ped-Bike Adj(A_pbT)	1.00		1.00	1.00		1.00	1.00		1.00	1.00		1.00
Parking Bus, Adj	1.00	1.00	1.00	1.00	1.00	1.00	1.00	1.00	1.00	1.00	1.00	1.00
Adj Sat Flow, veh/h/ln	1863	1863	1900	1863	1863	1900	1863	1863	1900	1863	1863	1900
Adj Flow Rate, veh/h	183	398	90	72	219	42	157	482	114	44	260	78
Adj No. of Lanes	1	1	0	1	1	0	1	1	0	1	1	0
Peak Hour Factor	0.69	0.91	0.63	0.75	0.94	0.45	0.54	0.92	0.63	0.80	0.89	0.59
Percent Heavy Veh, %	2	2	2	2	2	2	2	2	2	2	2	2
Cap, veh/h	399	444	100	210	385	74	387	517	122	183	430	129
Arrive On Green	0.10	0.30	0.30	0.05	0.25	0.25	0.08	0.36	0.36	0.04	0.31	0.31
Sat Flow, veh/h	1774	1471	333	1774	1520	291	1774	1457	345	1774	1377	413
Grp Volume(v), veh/h	183	0	488	72	0	261	157	0	596	44	0	338
Grp Sat Flow(s),veh/h/ln	1774	0	1804	1774	0	1811	1774	0	1802	1774	0	1790
Q Serve(g_s), s	6.2	0.0	21.8	2.5	0.0	10.6	4.9	0.0	26.8	1.4	0.0	13.5
Cycle Q Clear(g_c), s	6.2	0.0	21.8	2.5	0.0	10.6	4.9	0.0	26.8	1.4	0.0	13.5
Prop In Lane	1.00		0.18	1.00		0.16	1.00		0.19	1.00		0.23
Lane Grp Cap(c), veh/h	399	0	544	210	0	459	387	0	640	183	0	559
V/C Ratio(X)	0.46	0.00	0.90	0.34	0.00	0.57	0.41	0.00	0.93	0.24	0.00	0.60
Avail Cap(c_a), veh/h	409	0	590	234	0	519	421	0	655	223	0	581
HCM Platoon Ratio	1.00	1.00	1.00	1.00	1.00	1.00	1.00	1.00	1.00	1.00	1.00	1.00
Upstream Filter(I)	1.00	0.00	1.00	1.00	0.00	1.00	1.00	0.00	1.00	1.00	0.00	1.00
Uniform Delay (d), s/veh	20.2	0.0	28.1	23.4	0.0	27.4	18.2	0.0	26.1	21.6	0.0	24.5
Incr Delay (d2), s/veh	0.8	0.0	15.7	1.0	0.0	1.1	0.7	0.0	20.0	0.7	0.0	1.7
Initial Q Delay(d3),s/veh	0.0	0.0	0.0	0.0	0.0	0.0	0.0	0.0	0.0	0.0	0.0	0.0
%ile BackOfQ(50%),veh/ln	3.1	0.0	13.2	1.3	0.0	5.4	2.5	0.0	16.8	0.7	0.0	6.9
LnGrp Delay(d),s/veh	21.1	0.0	43.8	24.4	0.0	28.5	18.9	0.0	46.1	22.3	0.0	26.2
LnGrp LOS	C		D	C		C	B		D	C		C
Approach Vol, veh/h		671			333			753			382	
Approach Delay, s/veh		37.6			27.6			40.4			25.8	
Approach LOS		D			C			D			C	

Timer	1	2	3	4	5	6	7	8
Assigned Phs	1	2	3	4	5	6	7	8
Phs Duration (G+Y+Rc), s	9.5	30.8	12.2	31.7	13.5	26.7	8.6	35.3
Change Period (Y+Rc), s	5.4	5.4	5.4	5.4	5.4	5.4	5.4	5.4
Max Green Setting (Gmax), s	5.2	27.5	8.4	27.3	8.6	24.1	5.1	30.6
Max Q Clear Time (g_c+I1), s	4.5	23.8	6.9	15.5	8.2	12.6	3.4	28.8
Green Ext Time (p_c), s	0.0	1.6	0.1	4.9	0.0	3.6	0.0	1.0

Intersection Summary	
HCM 2010 Ctrl Delay	34.9
HCM 2010 LOS	C

Movement	EBL	EBT	EBR	WBL	WBT	WBR	NBL	NBT	NBR	SBL	SBT	SBR
Lane Configurations												
Traffic Volume (veh/h)	391	185	13	1	134	156	29	59	8	79	28	62
Future Volume (veh/h)	391	185	13	1	134	156	29	59	8	79	28	62
Number	5	2	12	1	6	16	3	8	18	7	4	14
Initial Q (Qb), veh	0	0	0	0	0	0	0	0	0	0	0	0
Ped-Bike Adj(A_pbT)	1.00		1.00	1.00		1.00	1.00		1.00	1.00		1.00
Parking Bus, Adj	1.00	1.00	1.00	1.00	1.00	1.00	1.00	1.00	1.00	1.00	1.00	1.00
Adj Sat Flow, veh/h/ln	1863	1863	1900	1863	1863	1900	1863	1863	1900	1863	1863	1863
Adj Flow Rate, veh/h	483	240	28	4	144	205	44	72	16	90	44	95
Adj No. of Lanes	1	1	0	1	1	0	1	1	0	1	1	1
Peak Hour Factor	0.81	0.77	0.46	0.25	0.93	0.76	0.66	0.82	0.50	0.88	0.64	0.65
Percent Heavy Veh, %	2	2	2	2	2	2	2	2	2	2	2	2
Cap, veh/h	704	1066	124	782	453	646	298	232	51	276	292	248
Arrive On Green	0.65	0.65	0.65	0.65	0.65	0.65	0.16	0.16	0.16	0.16	0.16	0.16
Sat Flow, veh/h	1028	1638	191	1107	696	991	1245	1477	328	1304	1863	1583
Grp Volume(v), veh/h	483	0	268	4	0	349	44	0	88	90	44	95
Grp Sat Flow(s),veh/h/ln	1028	0	1829	1107	0	1688	1245	0	1805	1304	1863	1583
Q Serve(g_s), s	21.9	0.0	3.4	0.1	0.0	5.1	1.8	0.0	2.4	3.7	1.1	3.0
Cycle Q Clear(g_c), s	27.0	0.0	3.4	3.4	0.0	5.1	2.9	0.0	2.4	6.1	1.1	3.0
Prop In Lane	1.00		0.10	1.00		0.59	1.00		0.18	1.00		1.00
Lane Grp Cap(c), veh/h	704	0	1191	782	0	1099	298	0	283	276	292	248
V/C Ratio(X)	0.69	0.00	0.23	0.01	0.00	0.32	0.15	0.00	0.31	0.33	0.15	0.38
Avail Cap(c_a), veh/h	1234	0	2134	1353	0	1969	404	0	437	387	451	383
HCM Platoon Ratio	1.00	1.00	1.00	1.00	1.00	1.00	1.00	1.00	1.00	1.00	1.00	1.00
Upstream Filter(I)	1.00	0.00	1.00	1.00	0.00	1.00	1.00	0.00	1.00	1.00	1.00	1.00
Uniform Delay (d), s/veh	10.3	0.0	4.0	4.7	0.0	4.3	21.7	0.0	21.0	23.7	20.5	21.3
Incr Delay (d2), s/veh	1.2	0.0	0.1	0.0	0.0	0.2	0.2	0.0	0.6	0.7	0.2	1.0
Initial Q Delay(d3),s/veh	0.0	0.0	0.0	0.0	0.0	0.0	0.0	0.0	0.0	0.0	0.0	0.0
%ile BackOfQ(50%),veh/ln	6.3	0.0	1.7	0.0	0.0	2.4	0.6	0.0	1.2	1.4	0.6	1.4
LnGrp Delay(d),s/veh	11.5	0.0	4.1	4.7	0.0	4.5	22.0	0.0	21.6	24.4	20.7	22.2
LnGrp LOS	B		A	A		A	C		C	C	C	C
Approach Vol, veh/h		751			353			132			229	
Approach Delay, s/veh		8.8			4.5			21.7			22.8	
Approach LOS		A			A			C			C	

Timer	1	2	3	4	5	6	7	8
Assigned Phs		2		4		6		8
Phs Duration (G+Y+Rc), s		42.0		14.2		42.0		14.2
Change Period (Y+Rc), s		5.4		5.4		5.4		5.4
Max Green Setting (Gmax), s		65.6		13.6		65.6		13.6
Max Q Clear Time (g_c+I1), s		29.0		8.1		7.1		4.9
Green Ext Time (p_c), s		7.6		0.7		7.9		1.0

Intersection Summary	
HCM 2010 Ctrl Delay	11.1
HCM 2010 LOS	B

Movement	EBL	EBT	EBR	WBL	WBT	WBR	NBL	NBT	NBR	SBL	SBT	SBR
Lane Configurations												
Traffic Volume (veh/h)	86	71	117	57	55	11	129	833	80	16	311	40
Future Volume (veh/h)	86	71	117	57	55	11	129	833	80	16	311	40
Number	5	2	12	1	6	16	3	8	18	7	4	14
Initial Q (Qb), veh	0	0	0	0	0	0	0	0	0	0	0	0
Ped-Bike Adj(A_pbT)	1.00		1.00	1.00		1.00	1.00		1.00	1.00		1.00
Parking Bus, Adj	1.00	1.00	1.00	1.00	1.00	1.00	1.00	1.00	1.00	1.00	1.00	1.00
Adj Sat Flow, veh/h/ln	1863	1863	1900	1863	1863	1900	1863	1863	1900	1863	1863	1900
Adj Flow Rate, veh/h	126	113	167	102	100	20	150	905	123	30	349	60
Adj No. of Lanes	1	1	0	1	1	0	1	1	0	1	1	0
Peak Hour Factor	0.68	0.63	0.70	0.56	0.55	0.55	0.86	0.92	0.65	0.54	0.89	0.67
Percent Heavy Veh, %	2	2	2	2	2	2	2	2	2	2	2	2
Cap, veh/h	284	110	162	155	243	49	552	901	123	115	825	142
Arrive On Green	0.05	0.16	0.16	0.05	0.16	0.16	0.06	0.56	0.56	0.03	0.53	0.53
Sat Flow, veh/h	1774	680	1005	1774	1508	302	1774	1606	218	1774	1549	266
Grp Volume(v), veh/h	126	0	280	102	0	120	150	0	1028	30	0	409
Grp Sat Flow(s),veh/h/ln	1774	0	1685	1774	0	1810	1774	0	1824	1774	0	1816
Q Serve(g_s), s	5.4	0.0	17.4	5.2	0.0	6.4	4.1	0.0	60.6	0.8	0.0	14.7
Cycle Q Clear(g_c), s	5.4	0.0	17.4	5.2	0.0	6.4	4.1	0.0	60.6	0.8	0.0	14.7
Prop In Lane	1.00		0.60	1.00		0.17	1.00		0.12	1.00		0.15
Lane Grp Cap(c), veh/h	284	0	272	155	0	292	552	0	1024	115	0	967
V/C Ratio(X)	0.44	0.00	1.03	0.66	0.00	0.41	0.27	0.00	1.00	0.26	0.00	0.42
Avail Cap(c_a), veh/h	284	0	272	155	0	292	568	0	1024	149	0	986
HCM Platoon Ratio	1.00	1.00	1.00	1.00	1.00	1.00	1.00	1.00	1.00	1.00	1.00	1.00
Upstream Filter(I)	1.00	0.00	1.00	1.00	0.00	1.00	1.00	0.00	1.00	1.00	0.00	1.00
Uniform Delay (d), s/veh	37.4	0.0	45.3	37.0	0.0	40.7	11.2	0.0	23.7	25.9	0.0	15.2
Incr Delay (d2), s/veh	1.1	0.0	62.8	9.6	0.0	0.9	0.3	0.0	29.1	1.2	0.0	0.3
Initial Q Delay(d3),s/veh	0.0	0.0	0.0	0.0	0.0	0.0	0.0	0.0	0.0	0.0	0.0	0.0
%ile BackOfQ(50%),veh/ln	0.9	0.0	12.8	2.9	0.0	3.3	2.0	0.0	38.4	0.5	0.0	7.4
LnGrp Delay(d),s/veh	38.5	0.0	108.1	46.6	0.0	41.6	11.4	0.0	52.8	27.1	0.0	15.5
LnGrp LOS	D		F	D		D	B		F	C		B
Approach Vol, veh/h		406			222			1178			439	
Approach Delay, s/veh		86.5			43.9			47.5			16.3	
Approach LOS		F			D			D			B	

Timer	1	2	3	4	5	6	7	8
Assigned Phs	1	2	3	4	5	6	7	8
Phs Duration (G+Y+Rc), s	10.8	22.8	11.5	62.9	10.8	22.8	8.4	66.0
Change Period (Y+Rc), s	5.4	5.4	5.4	5.4	5.4	5.4	5.4	5.4
Max Green Setting (Gmax), s	5.4	17.4	7.0	58.6	5.4	17.4	5.0	60.6
Max Q Clear Time (g_c+I1), s	7.2	19.4	6.1	16.7	7.4	8.4	2.8	62.6
Green Ext Time (p_c), s	0.0	0.0	0.0	16.6	0.0	1.6	0.0	0.0

Intersection Summary	
HCM 2010 Ctrl Delay	48.1
HCM 2010 LOS	D

Movement	EBL	EBT	EBR	WBL	WBT	WBR	NBL	NBT	NBR	SBL	SBT	SBR
Lane Configurations												
Traffic Volume (veh/h)	100	1530	70	20	720	60	0	0	100	40	20	40
Future Volume (veh/h)	100	1530	70	20	720	60	0	0	100	40	20	40
Number	5	2	12	1	6	16	3	8	18	7	4	14
Initial Q (Qb), veh	0	0	0	0	0	0	0	0	0	0	0	0
Ped-Bike Adj(A_pbT)	1.00		1.00	1.00		1.00	1.00		1.00	1.00		1.00
Parking Bus, Adj	1.00	1.00	1.00	1.00	1.00	1.00	1.00	1.00	1.00	1.00	1.00	1.00
Adj Sat Flow, veh/h/ln	1863	1863	1900	1863	1863	1900	0	1863	1900	1900	1863	1863
Adj Flow Rate, veh/h	109	1663	76	22	783	65	0	0	109	43	22	43
Adj No. of Lanes	1	2	0	1	2	0	0	1	0	0	1	1
Peak Hour Factor	0.92	0.92	0.92	0.92	0.92	0.92	0.92	0.92	0.92	0.92	0.92	0.92
Percent Heavy Veh, %	2	2	2	2	2	2	0	2	2	2	2	2
Cap, veh/h	536	2811	128	253	2484	206	0	0	186	87	37	186
Arrive On Green	0.06	1.00	1.00	0.75	0.75	0.75	0.00	0.00	0.12	0.12	0.12	0.12
Sat Flow, veh/h	1774	3448	157	277	3309	275	0	0	1583	419	316	1583
Grp Volume(v), veh/h	109	850	889	22	419	429	0	0	109	65	0	43
Grp Sat Flow(s),veh/h/ln	1774	1770	1835	277	1770	1814	0	0	1583	736	0	1583
Q Serve(g_s), s	2.2	0.0	0.0	3.4	12.4	12.4	0.0	0.0	10.4	5.8	0.0	3.9
Cycle Q Clear(g_c), s	2.2	0.0	0.0	3.4	12.4	12.4	0.0	0.0	10.4	16.3	0.0	3.9
Prop In Lane	1.00		0.09	1.00		0.15	0.00		1.00	0.66		1.00
Lane Grp Cap(c), veh/h	536	1443	1496	253	1328	1362	0	0	186	124	0	186
V/C Ratio(X)	0.20	0.59	0.59	0.09	0.32	0.32	0.00	0.00	0.59	0.53	0.00	0.23
Avail Cap(c_a), veh/h	632	1443	1496	253	1328	1362	0	0	234	167	0	234
HCM Platoon Ratio	2.00	2.00	2.00	1.00	1.00	1.00	1.00	1.00	1.00	1.00	1.00	1.00
Upstream Filter(I)	0.62	0.62	0.62	0.92	0.92	0.92	0.00	0.00	1.00	1.00	0.00	1.00
Uniform Delay (d), s/veh	4.3	0.0	0.0	5.4	6.5	6.5	0.0	0.0	67.0	72.3	0.0	64.1
Incr Delay (d2), s/veh	0.1	1.1	1.1	0.6	0.6	0.6	0.0	0.0	2.9	3.4	0.0	0.6
Initial Q Delay(d3),s/veh	0.0	0.0	0.0	0.0	0.0	0.0	0.0	0.0	0.0	0.0	0.0	0.0
%ile BackOfQ(50%),veh/ln	1.1	0.4	0.5	0.3	6.3	6.4	0.0	0.0	4.7	3.0	0.0	3.6
LnGrp Delay(d),s/veh	4.4	1.1	1.1	6.0	7.1	7.1	0.0	0.0	69.9	75.8	0.0	64.7
LnGrp LOS	A	A	A	A	A	A			E	E		E
Approach Vol, veh/h		1848			870			109			108	
Approach Delay, s/veh		1.3			7.1			69.9			71.4	
Approach LOS		A			A			E			E	

Timer	1	2	3	4	5	6	7	8
Assigned Phs		2		4	5	6		8
Phs Duration (G+Y+Rc), s		135.9		24.1	10.4	125.5		24.1
Change Period (Y+Rc), s		5.4		5.4	5.4	5.4		5.4
Max Green Setting (Gmax), s		125.6		23.6	13.6	106.6		23.6
Max Q Clear Time (g_c+I1), s		2.0		18.3	4.2	14.4		12.4
Green Ext Time (p_c), s		47.3		0.5	0.1	43.0		0.8

Intersection Summary	
HCM 2010 Ctrl Delay	8.1
HCM 2010 LOS	A

Movement	EBL	EBT	EBR	WBL	WBT	WBR	NBL	NBT	NBR	SBL	SBT	SBR
Lane Configurations												
Traffic Volume (veh/h)	120	1360	120	10	700	50	150	40	230	110	20	80
Future Volume (veh/h)	120	1360	120	10	700	50	150	40	230	110	20	80
Number	5	2	12	1	6	16	3	8	18	7	4	14
Initial Q (Qb), veh	0	0	0	0	0	0	0	0	0	0	0	0
Ped-Bike Adj(A_pbT)	1.00		1.00	1.00		1.00	1.00		1.00	1.00		1.00
Parking Bus, Adj	1.00	1.00	1.00	1.00	1.00	1.00	1.00	1.00	1.00	1.00	1.00	1.00
Adj Sat Flow, veh/h/ln	1863	1863	1900	1863	1863	1900	1863	1863	1863	1863	1863	1863
Adj Flow Rate, veh/h	130	1478	130	11	761	54	163	43	250	120	22	87
Adj No. of Lanes	1	2	0	1	2	0	1	1	1	1	1	1
Peak Hour Factor	0.92	0.92	0.92	0.92	0.92	0.92	0.92	0.92	0.92	0.92	0.92	0.92
Percent Heavy Veh, %	2	2	2	2	2	2	2	2	2	2	2	2
Cap, veh/h	503	2331	204	281	2293	163	265	128	128	230	85	129
Arrive On Green	0.07	1.00	1.00	0.01	0.68	0.68	0.10	0.07	0.07	0.08	0.05	0.05
Sat Flow, veh/h	1774	3294	288	1774	3353	238	1774	1863	1583	1774	1863	1583
Grp Volume(v), veh/h	130	790	818	11	402	413	163	43	250	120	22	87
Grp Sat Flow(s),veh/h/ln	1774	1770	1812	1774	1770	1821	1774	1863	1583	1774	1863	1583
Q Serve(g_s), s	3.7	0.0	0.0	0.3	14.8	14.9	13.8	3.5	11.0	10.2	1.8	7.3
Cycle Q Clear(g_c), s	3.7	0.0	0.0	0.3	14.8	14.9	13.8	3.5	11.0	10.2	1.8	7.3
Prop In Lane	1.00		0.16	1.00		0.13	1.00		1.00	1.00		1.00
Lane Grp Cap(c), veh/h	503	1253	1282	281	1210	1245	265	128	128	230	85	129
V/C Ratio(X)	0.26	0.63	0.64	0.04	0.33	0.33	0.61	0.34	1.95	0.52	0.26	0.68
Avail Cap(c_a), veh/h	542	1253	1282	524	1210	1245	315	128	128	268	85	129
HCM Platoon Ratio	2.00	2.00	2.00	1.00	1.00	1.00	1.00	1.00	1.00	1.00	1.00	1.00
Upstream Filter(I)	0.80	0.80	0.80	0.96	0.96	0.96	1.00	1.00	1.00	1.00	1.00	1.00
Uniform Delay (d), s/veh	7.3	0.0	0.0	7.4	10.3	10.3	64.1	71.0	73.5	66.2	73.8	71.5
Incr Delay (d2), s/veh	0.2	1.9	2.0	0.1	0.7	0.7	2.6	1.5	456.1	1.8	1.6	13.2
Initial Q Delay(d3),s/veh	0.0	0.0	0.0	0.0	0.0	0.0	0.0	0.0	0.0	0.0	0.0	0.0
%ile BackOfQ(50%),veh/ln	1.8	0.7	0.7	0.2	7.5	7.7	6.9	1.9	21.9	5.1	1.0	4.2
LnGrp Delay(d),s/veh	7.5	1.9	2.0	7.5	11.0	11.0	66.7	72.5	529.6	68.0	75.4	84.6
LnGrp LOS	A	A	A	A	B	B	E	E	F	E	E	F
Approach Vol, veh/h		1738			826			456			229	
Approach Delay, s/veh		2.4			11.0			321.0			75.0	
Approach LOS		A			B			F			E	

Timer	1	2	3	4	5	6	7	8
Assigned Phs	1	2	3	4	5	6	7	8
Phs Duration (G+Y+Rc), s	7.3	118.6	21.4	12.7	11.1	114.8	17.6	16.4
Change Period (Y+Rc), s	5.4	5.4	5.4	5.4	5.4	5.4	5.4	5.4
Max Green Setting (Gmax), s	23.8	87.9	20.4	6.3	9.2	102.5	15.7	11.0
Max Q Clear Time (g_c+I1), s	2.3	2.0	15.8	9.3	5.7	16.9	12.2	13.0
Green Ext Time (p_c), s	0.0	34.0	0.2	0.0	0.1	34.0	0.1	0.0

Intersection Summary	
HCM 2010 Ctrl Delay	54.4
HCM 2010 LOS	D

Movement	EBL	EBT	WBT	WBR	SBL	SBR
Lane Configurations						
Traffic Volume (veh/h)	120	2370	1960	220	300	20
Future Volume (veh/h)	120	2370	1960	220	300	20
Number	5	2	6	16	7	14
Initial Q (Qb), veh	0	0	0	0	0	0
Ped-Bike Adj(A_pbT)	1.00			1.00	1.00	1.00
Parking Bus, Adj	1.00	1.00	1.00	1.00	1.00	1.00
Adj Sat Flow, veh/h/ln	1863	1863	1863	1900	1863	1863
Adj Flow Rate, veh/h	130	2576	2130	239	326	22
Adj No. of Lanes	1	3	3	0	2	1
Peak Hour Factor	0.92	0.92	0.92	0.92	0.92	0.92
Percent Heavy Veh, %	2	2	2	2	2	2
Cap, veh/h	182	4181	3519	389	380	175
Arrive On Green	0.03	0.82	0.76	0.76	0.11	0.11
Sat Flow, veh/h	1774	5253	4816	514	3442	1583
Grp Volume(v), veh/h	130	2576	1546	823	326	22
Grp Sat Flow(s),veh/h/ln	1774	1695	1695	1772	1721	1583
Q Serve(g_s), s	2.5	29.2	32.5	33.7	14.9	2.0
Cycle Q Clear(g_c), s	2.5	29.2	32.5	33.7	14.9	2.0
Prop In Lane	1.00			0.29	1.00	1.00
Lane Grp Cap(c), veh/h	182	4181	2567	1342	380	175
V/C Ratio(X)	0.72	0.62	0.60	0.61	0.86	0.13
Avail Cap(c_a), veh/h	333	4181	2567	1342	529	243
HCM Platoon Ratio	1.00	1.00	1.00	1.00	1.00	1.00
Upstream Filter(I)	0.72	0.72	1.00	1.00	1.00	1.00
Uniform Delay (d), s/veh	23.4	5.1	8.7	8.8	69.9	64.2
Incr Delay (d2), s/veh	3.8	0.5	1.1	2.1	9.9	0.3
Initial Q Delay(d3),s/veh	0.0	0.0	0.0	0.0	0.0	0.0
%ile BackOfQ(50%),veh/ln	4.6	13.5	15.4	17.0	7.6	1.9
LnGrp Delay(d),s/veh	27.2	5.6	9.7	10.9	79.8	64.5
LnGrp LOS	C	A	A	B	E	E
Approach Vol, veh/h		2706	2369		348	
Approach Delay, s/veh		6.7	10.1		78.9	
Approach LOS		A	B		E	

Timer	1	2	3	4	5	6	7	8
Assigned Phs		2		4	5	6		
Phs Duration (G+Y+Rc), s		136.9		23.1	10.4	126.6		
Change Period (Y+Rc), s		5.4		5.4	5.4	5.4		
Max Green Setting (Gmax), s		124.6		24.6	18.6	100.6		
Max Q Clear Time (g_c+I1), s		31.2		16.9	4.5	35.7		
Green Ext Time (p_c), s		90.4		0.8	0.2	63.4		

Intersection Summary	
HCM 2010 Ctrl Delay	12.8
HCM 2010 LOS	B

Movement	EBT	EBR	WBL	WBT	NBL	NBR
Lane Configurations						
Traffic Volume (veh/h)	2270	120	100	1920	10	100
Future Volume (veh/h)	2270	120	100	1920	10	100
Number	2	12	1	6	3	18
Initial Q (Qb), veh	0	0	0	0	0	0
Ped-Bike Adj(A_pbT)		1.00	1.00		1.00	1.00
Parking Bus, Adj	1.00	1.00	1.00	1.00	1.00	1.00
Adj Sat Flow, veh/h/ln	1863	1900	1863	1863	1863	1863
Adj Flow Rate, veh/h	2467	130	109	2087	11	109
Adj No. of Lanes	3	0	1	3	1	2
Peak Hour Factor	0.92	0.92	0.92	0.92	0.92	0.92
Percent Heavy Veh, %	2	2	2	2	2	2
Cap, veh/h	4041	211	197	4481	91	143
Arrive On Green	1.00	1.00	0.03	0.88	0.05	0.05
Sat Flow, veh/h	5117	258	1774	5253	1774	2787
Grp Volume(v), veh/h	1682	915	109	2087	11	109
Grp Sat Flow(s),veh/h/ln	1695	1817	1774	1695	1774	1393
Q Serve(g_s), s	0.0	0.0	1.5	13.2	0.9	6.2
Cycle Q Clear(g_c), s	0.0	0.0	1.5	13.2	0.9	6.2
Prop In Lane		0.14	1.00		1.00	1.00
Lane Grp Cap(c), veh/h	2768	1484	197	4481	91	143
V/C Ratio(X)	0.61	0.62	0.55	0.47	0.12	0.76
Avail Cap(c_a), veh/h	2768	1484	348	4481	118	185
HCM Platoon Ratio	2.00	2.00	1.00	1.00	1.00	1.00
Upstream Filter(I)	0.56	0.56	0.68	0.68	1.00	1.00
Uniform Delay (d), s/veh	0.0	0.0	1.8	1.9	72.4	74.9
Incr Delay (d2), s/veh	0.6	1.1	1.7	0.2	0.6	12.9
Initial Q Delay(d3),s/veh	0.0	0.0	0.0	0.0	0.0	0.0
%ile BackOfQ(50%),veh/ln	0.2	0.5	0.8	6.1	0.5	2.6
LnGrp Delay(d),s/veh	0.6	1.1	3.5	2.2	73.0	87.8
LnGrp LOS	A	A	A	A	E	F
Approach Vol, veh/h	2597			2196	120	
Approach Delay, s/veh	0.8			2.2	86.4	
Approach LOS	A			A	F	

Timer	1	2	3	4	5	6	7	8
Assigned Phs	1	2				6		8
Phs Duration (G+Y+Rc), s	10.4	136.0				146.4		13.6
Change Period (Y+Rc), s	5.4	5.4				5.4		5.4
Max Green Setting (Gmax), s	18.6	114.6				138.6		10.6
Max Q Clear Time (g_c+I1), s	3.5	2.0				15.2		8.2
Green Ext Time (p_c), s	0.2	105.9				115.4		0.1

Intersection Summary	
HCM 2010 Ctrl Delay	3.5
HCM 2010 LOS	A

HCM 2010 analysis supports speed limit in the range of 25 and 55 mph

Movement	EBL	EBT	WBT	WBR	SBL	SBR
Lane Configurations						
Traffic Volume (veh/h)	100	1850	1530	80	100	10
Future Volume (veh/h)	100	1850	1530	80	100	10
Number	5	2	6	16	7	14
Initial Q (Qb), veh	0	0	0	0	0	0
Ped-Bike Adj(A_pbT)	1.00			1.00	1.00	1.00
Parking Bus, Adj	1.00	1.00	1.00	1.00	1.00	1.00
Adj Sat Flow, veh/h/ln	1863	1863	1863	1900	1863	1863
Adj Flow Rate, veh/h	109	2011	1663	87	109	11
Adj No. of Lanes	1	3	3	0	1	1
Peak Hour Factor	0.92	0.92	0.92	0.92	0.92	0.92
Percent Heavy Veh, %	2	2	2	2	2	2
Cap, veh/h	289	4364	3927	205	132	118
Arrive On Green	0.03	0.86	0.79	0.79	0.07	0.07
Sat Flow, veh/h	1774	5253	5116	259	1774	1583
Grp Volume(v), veh/h	109	2011	1139	611	109	11
Grp Sat Flow(s),veh/h/ln	1774	1695	1695	1817	1774	1583
Q Serve(g_s), s	1.7	14.8	16.7	16.7	9.7	1.0
Cycle Q Clear(g_c), s	1.7	14.8	16.7	16.7	9.7	1.0
Prop In Lane	1.00			0.14	1.00	1.00
Lane Grp Cap(c), veh/h	289	4364	2690	1442	132	118
V/C Ratio(X)	0.38	0.46	0.42	0.42	0.83	0.09
Avail Cap(c_a), veh/h	451	4364	2690	1442	295	263
HCM Platoon Ratio	1.00	1.00	1.00	1.00	1.00	1.00
Upstream Filter(I)	1.00	1.00	0.88	0.88	1.00	1.00
Uniform Delay (d), s/veh	4.1	2.7	5.1	5.1	73.0	69.0
Incr Delay (d2), s/veh	0.8	0.4	0.1	0.2	12.2	0.3
Initial Q Delay(d3),s/veh	0.0	0.0	0.0	0.0	0.0	0.0
%ile BackOfQ(50%),veh/ln	1.0	6.8	7.8	8.4	5.2	0.9
LnGrp Delay(d),s/veh	4.9	3.0	5.2	5.3	85.3	69.4
LnGrp LOS	A	A	A	A	F	E
Approach Vol, veh/h		2120	1750		120	
Approach Delay, s/veh		3.1	5.3		83.8	
Approach LOS		A	A		F	

Timer	1	2	3	4	5	6	7	8
Assigned Phs		2		4	5	6		
Phs Duration (G+Y+Rc), s		142.7		17.3	10.4	132.4		
Change Period (Y+Rc), s		5.4		5.4	5.4	5.4		
Max Green Setting (Gmax), s		122.6		26.6	19.6	97.6		
Max Q Clear Time (g_c+I1), s		16.8		11.7	3.7	18.7		
Green Ext Time (p_c), s		84.6		0.2	0.2	66.6		

Intersection Summary	
HCM 2010 Ctrl Delay	6.5
HCM 2010 LOS	A

Movement	EBL	EBT	EBR	WBL	WBT	WBR	NBL	NBT	NBR	SBL	SBT	SBR
Lane Configurations												
Traffic Volume (veh/h)	30	1260	30	20	710	20	20	0	90	80	0	30
Future Volume (veh/h)	30	1260	30	20	710	20	20	0	90	80	0	30
Number	5	2	12	1	6	16	3	8	18	7	4	14
Initial Q (Qb), veh	0	0	0	0	0	0	0	0	0	0	0	0
Ped-Bike Adj(A_pbT)	1.00		1.00	1.00		1.00	1.00		1.00	1.00		1.00
Parking Bus, Adj	1.00	1.00	1.00	1.00	1.00	1.00	1.00	1.00	1.00	1.00	1.00	1.00
Adj Sat Flow, veh/h/ln	1863	1863	1900	1863	1863	1900	1900	1863	1900	1900	1863	1863
Adj Flow Rate, veh/h	33	1370	33	22	772	22	22	0	98	87	0	33
Adj No. of Lanes	1	2	0	1	2	0	0	2	0	0	1	1
Peak Hour Factor	0.92	0.92	0.92	0.92	0.92	0.92	0.92	0.92	0.92	0.92	0.92	0.92
Percent Heavy Veh, %	2	2	2	2	2	2	2	2	2	2	2	2
Cap, veh/h	521	2548	61	354	2519	72	88	0	228	170	0	250
Arrive On Green	0.05	1.00	1.00	0.02	0.72	0.72	0.16	0.00	0.16	0.16	0.00	0.16
Sat Flow, veh/h	1774	3532	85	1774	3515	100	273	0	1441	790	0	1583
Grp Volume(v), veh/h	33	686	717	22	389	405	22	0	98	87	0	33
Grp Sat Flow(s),veh/h/ln	1774	1770	1848	1774	1770	1845	273	0	1441	790	0	1583
Q Serve(g_s), s	0.8	0.0	0.0	0.5	12.8	12.8	2.5	0.0	9.8	10.4	0.0	2.9
Cycle Q Clear(g_c), s	0.8	0.0	0.0	0.5	12.8	12.8	22.8	0.0	9.8	20.3	0.0	2.9
Prop In Lane	1.00		0.05	1.00		0.05	1.00		1.00	1.00		1.00
Lane Grp Cap(c), veh/h	521	1276	1333	354	1268	1323	88	0	228	170	0	250
V/C Ratio(X)	0.06	0.54	0.54	0.06	0.31	0.31	0.25	0.00	0.43	0.51	0.00	0.13
Avail Cap(c_a), veh/h	563	1276	1333	403	1268	1323	125	0	267	205	0	293
HCM Platoon Ratio	2.00	2.00	2.00	1.00	1.00	1.00	1.00	1.00	1.00	1.00	1.00	1.00
Upstream Filter(I)	0.83	0.83	0.83	0.39	0.39	0.39	1.00	0.00	1.00	1.00	0.00	1.00
Uniform Delay (d), s/veh	5.9	0.0	0.0	5.6	8.2	8.2	76.3	0.0	60.9	70.0	0.0	57.9
Incr Delay (d2), s/veh	0.0	1.3	1.3	0.0	0.2	0.2	1.5	0.0	1.3	2.4	0.0	0.2
Initial Q Delay(d3),s/veh	0.0	0.0	0.0	0.0	0.0	0.0	0.0	0.0	0.0	0.0	0.0	0.0
%ile BackOfQ(50%),veh/ln	0.4	0.5	0.5	0.3	6.2	6.5	1.0	0.0	4.0	3.8	0.0	1.3
LnGrp Delay(d),s/veh	5.9	1.3	1.3	5.7	8.5	8.5	77.7	0.0	62.2	72.4	0.0	58.2
LnGrp LOS	A	A	A	A	A	A	E		E	E		E
Approach Vol, veh/h		1436			816			120			120	
Approach Delay, s/veh		1.4			8.4			65.0			68.5	
Approach LOS		A			A			E			E	

Timer	1	2	3	4	5	6	7	8
Assigned Phs	1	2		4	5	6		8
Phs Duration (G+Y+Rc), s	8.5	120.8		30.7	9.2	120.1		30.7
Change Period (Y+Rc), s	5.4	5.4		5.4	5.4	5.4		5.4
Max Green Setting (Gmax), s	7.6	106.6		29.6	7.6	106.6		29.6
Max Q Clear Time (g_c+I1), s	2.5	2.0		22.3	2.8	14.8		24.8
Green Ext Time (p_c), s	0.0	28.9		0.7	0.0	28.3		0.5

Intersection Summary	
HCM 2010 Ctrl Delay	10.0
HCM 2010 LOS	A

Movement	EBL	EBT	EBR	WBL	WBT	WBR	NBL	NBT	NBR	SBL	SBT	SBR
Lane Configurations												
Traffic Volume (veh/h)	30	1040	30	60	680	60	30	80	110	110	80	30
Future Volume (veh/h)	30	1040	30	60	680	60	30	80	110	110	80	30
Number	5	2	12	1	6	16	3	8	18	7	4	14
Initial Q (Qb), veh	0	0	0	0	0	0	0	0	0	0	0	0
Ped-Bike Adj(A_pbT)	1.00		1.00	1.00		1.00	1.00		1.00	1.00		1.00
Parking Bus, Adj	1.00	1.00	1.00	1.00	1.00	1.00	1.00	1.00	1.00	1.00	1.00	1.00
Adj Sat Flow, veh/h/ln	1863	1863	1900	1863	1863	1900	1863	1863	1900	1863	1863	1900
Adj Flow Rate, veh/h	33	1130	33	65	739	65	33	87	120	120	87	33
Adj No. of Lanes	1	2	0	1	2	0	1	1	0	1	1	0
Peak Hour Factor	0.92	0.92	0.92	0.92	0.92	0.92	0.92	0.92	0.92	0.92	0.92	0.92
Percent Heavy Veh, %	2	2	2	2	2	2	2	2	2	2	2	2
Cap, veh/h	440	2193	64	398	2074	182	250	101	139	193	241	91
Arrive On Green	0.05	1.00	1.00	0.03	0.63	0.63	0.02	0.14	0.14	0.07	0.19	0.19
Sat Flow, veh/h	1774	3512	103	1774	3292	289	1774	710	980	1774	1288	489
Grp Volume(v), veh/h	33	569	594	65	397	407	33	0	207	120	0	120
Grp Sat Flow(s),veh/h/ln	1774	1770	1845	1774	1770	1812	1774	0	1690	1774	0	1777
Q Serve(g_s), s	1.1	0.0	0.0	2.1	17.1	17.1	2.5	0.0	19.2	9.0	0.0	9.4
Cycle Q Clear(g_c), s	1.1	0.0	0.0	2.1	17.1	17.1	2.5	0.0	19.2	9.0	0.0	9.4
Prop In Lane	1.00		0.06	1.00		0.16	1.00		0.58	1.00		0.28
Lane Grp Cap(c), veh/h	440	1105	1152	398	1115	1141	250	0	240	193	0	332
V/C Ratio(X)	0.07	0.52	0.52	0.16	0.36	0.36	0.13	0.00	0.86	0.62	0.00	0.36
Avail Cap(c_a), veh/h	462	1105	1152	452	1115	1141	271	0	355	233	0	471
HCM Platoon Ratio	2.00	2.00	2.00	1.00	1.00	1.00	1.00	1.00	1.00	1.00	1.00	1.00
Upstream Filter(I)	0.91	0.91	0.91	0.97	0.97	0.97	1.00	0.00	1.00	1.00	0.00	1.00
Uniform Delay (d), s/veh	10.7	0.0	0.0	9.9	14.1	14.1	56.7	0.0	67.1	53.3	0.0	56.7
Incr Delay (d2), s/veh	0.1	1.6	1.5	0.2	0.9	0.8	0.2	0.0	13.5	3.6	0.0	0.7
Initial Q Delay(d3),s/veh	0.0	0.0	0.0	0.0	0.0	0.0	0.0	0.0	0.0	0.0	0.0	0.0
%ile BackOfQ(50%),veh/ln	0.5	0.5	0.5	1.0	8.7	8.9	1.3	0.0	9.9	4.6	0.0	4.7
LnGrp Delay(d),s/veh	10.7	1.6	1.5	10.1	15.0	15.0	57.0	0.0	80.6	56.9	0.0	57.4
LnGrp LOS	B	A	A	B	B	B	E		F	E		E
Approach Vol, veh/h		1196			869			240			240	
Approach Delay, s/veh		1.8			14.6			77.4			57.1	
Approach LOS		A			B			E			E	

Timer	1	2	3	4	5	6	7	8
Assigned Phs	1	2	3	4	5	6	7	8
Phs Duration (G+Y+Rc), s	10.1	105.3	9.2	35.3	9.2	106.2	16.4	28.1
Change Period (Y+Rc), s	5.4	5.4	5.4	5.4	5.4	5.4	5.4	5.4
Max Green Setting (Gmax), s	9.6	80.6	5.8	42.4	5.8	84.4	14.6	33.6
Max Q Clear Time (g_c+I1), s	4.1	2.0	4.5	11.4	3.1	19.1	11.0	21.2
Green Ext Time (p_c), s	0.0	21.3	0.0	2.1	0.0	20.6	0.1	1.5

Intersection Summary	
HCM 2010 Ctrl Delay	18.5
HCM 2010 LOS	B

Movement	EBT	EBR	WBL	WBT	NBL	NBR
Lane Configurations						
Traffic Volume (veh/h)	820	40	80	700	100	230
Future Volume (veh/h)	820	40	80	700	100	230
Number	2	12	1	6	3	18
Initial Q (Qb), veh	0	0	0	0	0	0
Ped-Bike Adj(A_pbT)		1.00	1.00		1.00	1.00
Parking Bus, Adj	1.00	1.00	1.00	1.00	1.00	1.00
Adj Sat Flow, veh/h/ln	1863	1900	1863	1863	1863	1863
Adj Flow Rate, veh/h	891	43	87	761	109	250
Adj No. of Lanes	2	0	1	2	1	1
Peak Hour Factor	0.92	0.92	0.92	0.92	0.92	0.92
Percent Heavy Veh, %	2	2	2	2	2	2
Cap, veh/h	2416	117	457	2716	293	310
Arrive On Green	0.70	0.70	0.03	0.77	0.17	0.17
Sat Flow, veh/h	3530	166	1774	3632	1774	1583
Grp Volume(v), veh/h	459	475	87	761	109	250
Grp Sat Flow(s),veh/h/ln	1770	1833	1774	1770	1774	1583
Q Serve(g_s), s	16.6	16.6	2.1	10.2	8.7	24.1
Cycle Q Clear(g_c), s	16.6	16.6	2.1	10.2	8.7	24.1
Prop In Lane		0.09	1.00		1.00	1.00
Lane Grp Cap(c), veh/h	1244	1289	457	2716	293	310
V/C Ratio(X)	0.37	0.37	0.19	0.28	0.37	0.81
Avail Cap(c_a), veh/h	1244	1289	764	2716	317	331
HCM Platoon Ratio	1.00	1.00	1.00	1.00	1.00	1.00
Upstream Filter(I)	1.00	1.00	0.94	0.94	1.00	1.00
Uniform Delay (d), s/veh	9.5	9.5	6.7	5.5	59.4	61.4
Incr Delay (d2), s/veh	0.8	0.8	0.2	0.1	0.8	12.9
Initial Q Delay(d3),s/veh	0.0	0.0	0.0	0.0	0.0	0.0
%ile BackOfQ(50%),veh/ln	8.3	8.6	1.0	5.0	4.4	11.6
LnGrp Delay(d),s/veh	10.4	10.3	6.9	5.6	60.2	74.4
LnGrp LOS	B	B	A	A	E	E
Approach Vol, veh/h	934			848	359	
Approach Delay, s/veh	10.4			5.7	70.1	
Approach LOS	B			A	E	

Timer	1	2	3	4	5	6	7	8
Assigned Phs	1	2				6		8
Phs Duration (G+Y+Rc), s	10.3	117.9				128.2		31.8
Change Period (Y+Rc), s	5.4	5.4				5.4		5.4
Max Green Setting (Gmax), s	32.6	82.6				120.6		28.6
Max Q Clear Time (g_c+I1), s	4.1	18.6				12.2		26.1
Green Ext Time (p_c), s	0.2	16.5				17.2		0.3

Intersection Summary	
HCM 2010 Ctrl Delay	18.5
HCM 2010 LOS	B

Movement	EBL	EBT	EBR	WBL	WBT	WBR	NBL	NBT	NBR	SBL	SBT	SBR
Lane Configurations												
Traffic Volume (veh/h)	50	510	50	40	760	40	80	130	120	190	110	30
Future Volume (veh/h)	50	510	50	40	760	40	80	130	120	190	110	30
Number	5	2	12	1	6	16	3	8	18	7	4	14
Initial Q (Qb), veh	0	0	0	0	0	0	0	0	0	0	0	0
Ped-Bike Adj(A_pbT)	1.00		1.00	1.00		1.00	1.00		1.00	1.00		1.00
Parking Bus, Adj	1.00	1.00	1.00	1.00	1.00	1.00	1.00	1.00	1.00	1.00	1.00	1.00
Adj Sat Flow, veh/h/ln	1863	1863	1900	1863	1863	1900	1863	1863	1900	1863	1863	1900
Adj Flow Rate, veh/h	54	554	54	43	826	43	87	141	130	207	120	33
Adj No. of Lanes	1	1	0	1	1	0	1	1	0	1	1	0
Peak Hour Factor	0.92	0.92	0.92	0.92	0.92	0.92	0.92	0.92	0.92	0.92	0.92	0.92
Percent Heavy Veh, %	2	2	2	2	2	2	2	2	2	2	2	2
Cap, veh/h	181	925	90	350	971	51	403	290	267	300	456	125
Arrive On Green	0.55	0.55	0.55	0.55	0.55	0.55	0.32	0.32	0.32	0.32	0.32	0.32
Sat Flow, veh/h	635	1671	163	809	1755	91	1229	894	824	1104	1407	387
Grp Volume(v), veh/h	54	0	608	43	0	869	87	0	271	207	0	153
Grp Sat Flow(s),veh/h/ln	635	0	1834	809	0	1847	1229	0	1717	1104	0	1794
Q Serve(g_s), s	6.9	0.0	19.5	3.3	0.0	35.0	5.0	0.0	11.2	16.3	0.0	5.6
Cycle Q Clear(g_c), s	41.9	0.0	19.5	22.8	0.0	35.0	10.5	0.0	11.2	27.5	0.0	5.6
Prop In Lane	1.00		0.09	1.00		0.05	1.00		0.48	1.00		0.22
Lane Grp Cap(c), veh/h	181	0	1015	350	0	1022	403	0	557	300	0	582
V/C Ratio(X)	0.30	0.00	0.60	0.12	0.00	0.85	0.22	0.00	0.49	0.69	0.00	0.26
Avail Cap(c_a), veh/h	194	0	1052	367	0	1059	403	0	557	300	0	582
HCM Platoon Ratio	1.00	1.00	1.00	1.00	1.00	1.00	1.00	1.00	1.00	1.00	1.00	1.00
Upstream Filter(I)	1.00	0.00	1.00	1.00	0.00	1.00	1.00	0.00	1.00	1.00	0.00	1.00
Uniform Delay (d), s/veh	34.3	0.0	13.2	20.8	0.0	16.6	25.9	0.0	23.9	34.9	0.0	22.0
Incr Delay (d2), s/veh	0.9	0.0	0.9	0.2	0.0	6.6	0.3	0.0	0.7	6.6	0.0	0.2
Initial Q Delay(d3),s/veh	0.0	0.0	0.0	0.0	0.0	0.0	0.0	0.0	0.0	0.0	0.0	0.0
%ile BackOfQ(50%),veh/ln	1.3	0.0	10.0	0.8	0.0	19.5	1.7	0.0	5.4	5.5	0.0	2.8
LnGrp Delay(d),s/veh	35.2	0.0	14.1	21.0	0.0	23.2	26.2	0.0	24.6	41.5	0.0	22.3
LnGrp LOS	D		B	C		C	C		C	D		C
Approach Vol, veh/h		662			912			358			360	
Approach Delay, s/veh		15.8			23.1			25.0			33.3	
Approach LOS		B			C			C			C	

Timer	1	2	3	4	5	6	7	8
Assigned Phs		2		4		6		8
Phs Duration (G+Y+Rc), s		54.2		34.0		54.2		34.0
Change Period (Y+Rc), s		5.4		5.4		5.4		5.4
Max Green Setting (Gmax), s		50.6		28.6		50.6		28.6
Max Q Clear Time (g_c+I1), s		43.9		29.5		37.0		13.2
Green Ext Time (p_c), s		4.9		0.0		8.5		3.5

Intersection Summary	
HCM 2010 Ctrl Delay	22.9
HCM 2010 LOS	C

Movement	EBL	EBT	EBR	WBL	WBT	WBR	NBL	NBT	NBR	SBL	SBT	SBR
Lane Configurations												
Traffic Volume (veh/h)	34	150	125	81	189	331	94	461	76	380	792	31
Future Volume (veh/h)	34	150	125	81	189	331	94	461	76	380	792	31
Number	5	2	12	1	6	16	3	8	18	7	4	14
Initial Q (Qb), veh	0	0	0	0	0	0	0	0	0	0	0	0
Ped-Bike Adj(A_pbT)	1.00		1.00	1.00		1.00	1.00		1.00	1.00		1.00
Parking Bus, Adj	1.00	1.00	1.00	1.00	1.00	1.00	1.00	1.00	1.00	1.00	1.00	1.00
Adj Sat Flow, veh/h/ln	1863	1863	1900	1863	1863	1863	1863	1863	1900	1863	1863	1900
Adj Flow Rate, veh/h	40	169	152	116	210	380	118	562	100	409	870	35
Adj No. of Lanes	1	1	0	1	1	1	1	2	0	1	2	0
Peak Hour Factor	0.86	0.89	0.82	0.70	0.90	0.87	0.80	0.82	0.76	0.93	0.91	0.88
Percent Heavy Veh, %	2	2	2	2	2	2	2	2	2	2	2	2
Cap, veh/h	292	210	189	264	486	413	306	714	127	486	1264	51
Arrive On Green	0.04	0.23	0.23	0.07	0.26	0.26	0.07	0.24	0.24	0.20	0.36	0.36
Sat Flow, veh/h	1774	905	814	1774	1863	1583	1774	3005	533	1774	3468	140
Grp Volume(v), veh/h	40	0	321	116	210	380	118	330	332	409	444	461
Grp Sat Flow(s),veh/h/ln	1774	0	1719	1774	1863	1583	1774	1770	1769	1774	1770	1838
Q Serve(g_s), s	1.4	0.0	14.2	4.0	7.6	18.8	4.0	14.1	14.2	13.1	17.1	17.1
Cycle Q Clear(g_c), s	1.4	0.0	14.2	4.0	7.6	18.8	4.0	14.1	14.2	13.1	17.1	17.1
Prop In Lane	1.00		0.47	1.00		1.00	1.00		0.30	1.00		0.08
Lane Grp Cap(c), veh/h	292	0	398	264	486	413	306	420	420	486	645	670
V/C Ratio(X)	0.14	0.00	0.81	0.44	0.43	0.92	0.39	0.79	0.79	0.84	0.69	0.69
Avail Cap(c_a), veh/h	339	0	448	264	490	417	385	442	441	621	723	751
HCM Platoon Ratio	1.00	1.00	1.00	1.00	1.00	1.00	1.00	1.00	1.00	1.00	1.00	1.00
Upstream Filter(I)	1.00	0.00	1.00	1.00	1.00	1.00	1.00	1.00	1.00	1.00	1.00	1.00
Uniform Delay (d), s/veh	22.2	0.0	29.2	22.7	24.8	29.0	21.1	28.8	28.8	17.8	21.7	21.7
Incr Delay (d2), s/veh	0.2	0.0	9.4	1.1	0.6	25.4	0.8	8.7	9.0	8.2	2.4	2.3
Initial Q Delay(d3),s/veh	0.0	0.0	0.0	0.0	0.0	0.0	0.0	0.0	0.0	0.0	0.0	0.0
%ile BackOfQ(50%),veh/ln	0.7	0.0	7.7	2.0	4.0	11.1	2.0	7.9	8.0	7.4	8.8	9.1
LnGrp Delay(d),s/veh	22.4	0.0	38.6	23.8	25.4	54.3	21.9	37.5	37.8	26.0	24.1	24.0
LnGrp LOS	C		D	C	C	D	C	D	D	C	C	C
Approach Vol, veh/h		361			706			780			1314	
Approach Delay, s/veh		36.8			40.7			35.2			24.7	
Approach LOS		D			D			D			C	

Timer	1	2	3	4	5	6	7	8
Assigned Phs	1	2	3	4	5	6	7	8
Phs Duration (G+Y+Rc), s	10.7	24.1	11.0	34.8	8.4	26.4	21.2	24.5
Change Period (Y+Rc), s	5.4	5.4	5.4	5.4	5.4	5.4	5.4	5.4
Max Green Setting (Gmax), s	5.3	21.0	9.2	32.9	5.1	21.2	22.0	20.1
Max Q Clear Time (g_c+I1), s	6.0	16.2	6.0	19.1	3.4	20.8	15.1	16.2
Green Ext Time (p_c), s	0.0	2.0	0.1	8.2	0.0	0.2	0.8	3.0

Intersection Summary	
HCM 2010 Ctrl Delay	32.2
HCM 2010 LOS	C

Movement	EBL	EBT	EBR	WBL	WBT	WBR	NBL	NBT	NBR	SBL	SBT	SBR
Lane Configurations												
Traffic Volume (veh/h)	222	564	111	547	1098	569	156	904	290	501	1931	207
Future Volume (veh/h)	222	564	111	547	1098	569	156	904	290	501	1931	207
Number	5	2	12	1	6	16	3	8	18	7	4	14
Initial Q (Qb), veh	0	0	0	0	0	0	0	0	0	0	0	0
Ped-Bike Adj(A_pbT)	1.00		1.00	1.00		1.00	1.00		1.00	1.00		1.00
Parking Bus, Adj	1.00	1.00	1.00	1.00	1.00	1.00	1.00	1.00	1.00	1.00	1.00	1.00
Adj Sat Flow, veh/h/ln	1863	1863	1900	1863	1863	1863	1863	1863	1863	1863	1863	1900
Adj Flow Rate, veh/h	274	600	123	615	1234	632	214	993	372	516	2194	244
Adj No. of Lanes	2	2	0	2	2	1	2	2	1	2	3	0
Peak Hour Factor	0.81	0.94	0.90	0.89	0.89	0.90	0.73	0.91	0.78	0.97	0.88	0.85
Percent Heavy Veh, %	2	2	2	2	2	2	2	2	2	2	2	2
Cap, veh/h	243	652	133	592	1147	764	197	1071	752	546	1880	206
Arrive On Green	0.14	0.45	0.45	0.17	0.32	0.32	0.06	0.30	0.30	0.16	0.40	0.40
Sat Flow, veh/h	3442	2928	599	3442	3539	1583	3442	3539	1583	3442	4654	509
Grp Volume(v), veh/h	274	362	361	615	1234	632	214	993	372	516	1589	849
Grp Sat Flow(s),veh/h/ln	1721	1770	1757	1721	1770	1583	1721	1770	1583	1721	1695	1773
Q Serve(g_s), s	10.6	28.8	29.0	25.8	48.6	33.7	8.6	40.8	9.0	22.3	60.6	60.6
Cycle Q Clear(g_c), s	10.6	28.8	29.0	25.8	48.6	33.7	8.6	40.8	9.0	22.3	60.6	60.6
Prop In Lane	1.00		0.34	1.00		1.00	1.00		1.00	1.00		0.29
Lane Grp Cap(c), veh/h	243	394	391	592	1147	764	197	1071	752	546	1370	716
V/C Ratio(X)	1.13	0.92	0.92	1.04	1.08	0.83	1.08	0.93	0.49	0.94	1.16	1.19
Avail Cap(c_a), veh/h	243	394	391	592	1147	764	197	1071	752	546	1370	716
HCM Platoon Ratio	2.00	2.00	2.00	1.00	1.00	1.00	1.00	1.00	1.00	1.00	1.00	1.00
Upstream Filter(I)	0.95	0.95	0.95	1.00	1.00	1.00	1.00	1.00	1.00	1.00	1.00	1.00
Uniform Delay (d), s/veh	64.4	40.3	40.4	62.1	50.7	15.7	70.7	50.7	10.3	62.5	44.7	44.7
Incr Delay (d2), s/veh	94.5	27.8	28.5	47.5	49.6	7.5	88.4	13.4	0.5	25.5	80.5	97.3
Initial Q Delay(d3),s/veh	0.0	0.0	0.0	0.0	0.0	0.0	0.0	0.0	0.0	0.0	0.0	0.0
%ile BackOfQ(50%),veh/ln	8.2	16.9	16.9	16.2	31.6	16.3	6.5	22.0	5.2	12.5	43.7	49.0
LnGrp Delay(d),s/veh	158.9	68.2	68.9	109.6	100.3	23.2	159.1	64.1	10.8	87.9	125.2	142.0
LnGrp LOS	F	E	E	F	F	C	F	E	B	F	F	F
Approach Vol, veh/h		997			2481			1579			2954	
Approach Delay, s/veh		93.4			83.0			64.4			123.5	
Approach LOS		F			F			E			F	

Timer	1	2	3	4	5	6	7	8
Assigned Phs	1	2	3	4	5	6	7	8
Phs Duration (G+Y+Rc), s	31.2	38.8	14.0	66.0	16.0	54.0	29.2	50.8
Change Period (Y+Rc), s	5.4	5.4	5.4	5.4	5.4	5.4	5.4	5.4
Max Green Setting (Gmax), s	25.8	33.4	8.6	60.6	10.6	48.6	23.8	45.4
Max Q Clear Time (g_c+I1), s	27.8	31.0	10.6	62.6	12.6	50.6	24.3	42.8
Green Ext Time (p_c), s	0.0	1.0	0.0	0.0	0.0	0.0	0.0	1.9

Intersection Summary	
HCM 2010 Ctrl Delay	95.6
HCM 2010 LOS	F

Movement	EBL	EBT	EBR	WBL	WBT	WBR	NBL	NBT	NBR	SBL	SBT	SBR
Lane Configurations												
Traffic Volume (veh/h)	110	1270	30	30	2250	110	20	10	20	270	20	30
Future Volume (veh/h)	110	1270	30	30	2250	110	20	10	20	270	20	30
Number	5	2	12	1	6	16	3	8	18	7	4	14
Initial Q (Qb), veh	0	0	0	0	0	0	0	0	0	0	0	0
Ped-Bike Adj(A_pbT)	1.00		1.00	1.00		1.00	1.00		1.00	1.00		1.00
Parking Bus, Adj	1.00	1.00	1.00	1.00	1.00	1.00	1.00	1.00	1.00	1.00	1.00	1.00
Adj Sat Flow, veh/h/ln	1863	1863	1900	1863	1863	1900	1900	1863	1900	1863	1863	1863
Adj Flow Rate, veh/h	120	1380	33	33	2446	120	22	11	22	309	0	33
Adj No. of Lanes	1	3	0	1	3	0	0	1	0	2	0	1
Peak Hour Factor	0.92	0.92	0.92	0.92	0.92	0.92	0.92	0.92	0.92	0.92	0.92	0.92
Percent Heavy Veh, %	2	2	2	2	2	2	2	2	2	2	2	2
Cap, veh/h	155	3512	84	348	3361	163	28	14	28	366	0	163
Arrive On Green	0.07	1.00	1.00	0.02	0.68	0.68	0.04	0.04	0.04	0.10	0.00	0.10
Sat Flow, veh/h	1774	5109	122	1774	4969	242	683	342	683	3548	0	1583
Grp Volume(v), veh/h	120	916	497	33	1662	904	55	0	0	309	0	33
Grp Sat Flow(s),veh/h/ln	1774	1695	1841	1774	1695	1820	1708	0	0	1774	0	1583
Q Serve(g_s), s	3.3	0.0	0.0	0.8	46.7	47.9	4.8	0.0	0.0	12.8	0.0	2.9
Cycle Q Clear(g_c), s	3.3	0.0	0.0	0.8	46.7	47.9	4.8	0.0	0.0	12.8	0.0	2.9
Prop In Lane	1.00		0.07	1.00		0.13	0.40		0.40	1.00		1.00
Lane Grp Cap(c), veh/h	155	2330	1266	348	2293	1231	70	0	0	366	0	163
V/C Ratio(X)	0.77	0.39	0.39	0.09	0.72	0.73	0.79	0.00	0.00	0.85	0.00	0.20
Avail Cap(c_a), veh/h	241	2330	1266	366	2293	1231	87	0	0	487	0	217
HCM Platoon Ratio	2.00	2.00	2.00	1.00	1.00	1.00	1.00	1.00	1.00	1.00	1.00	1.00
Upstream Filter(I)	0.94	0.94	0.94	0.79	0.79	0.79	1.00	0.00	0.00	1.00	0.00	1.00
Uniform Delay (d), s/veh	29.7	0.0	0.0	6.8	15.4	15.6	71.3	0.0	0.0	66.1	0.0	61.6
Incr Delay (d2), s/veh	7.5	0.5	0.9	0.1	1.6	3.1	31.4	0.0	0.0	10.0	0.0	0.6
Initial Q Delay(d3),s/veh	0.0	0.0	0.0	0.0	0.0	0.0	0.0	0.0	0.0	0.0	0.0	0.0
%ile BackOfQ(50%),veh/ln	3.6	0.2	0.3	0.4	22.2	24.9	2.9	0.0	0.0	6.8	0.0	1.3
LnGrp Delay(d),s/veh	37.2	0.5	0.9	6.9	17.0	18.7	102.7	0.0	0.0	76.1	0.0	62.2
LnGrp LOS	D	A	A	A	B	B	F			E		E
Approach Vol, veh/h		1533			2599			55			342	
Approach Delay, s/veh		3.5			17.5			102.7			74.8	
Approach LOS		A			B			F			E	

Timer	1	2	3	4	5	6	7	8
Assigned Phs	1	2		4	5	6		8
Phs Duration (G+Y+Rc), s	9.1	108.5		20.9	10.8	106.9		11.5
Change Period (Y+Rc), s	5.4	5.4		5.4	5.4	5.4		5.4
Max Green Setting (Gmax), s	5.2	95.0		20.6	12.6	87.6		7.6
Max Q Clear Time (g_c+I1), s	2.8	2.0		14.8	5.3	49.9		6.8
Green Ext Time (p_c), s	0.0	80.2		0.6	0.1	35.4		0.0

Intersection Summary	
HCM 2010 Ctrl Delay	18.1
HCM 2010 LOS	B

Notes

User approved volume balancing among the lanes for turning movement.

Movement	EBL	EBT	EBR	WBL	WBT	WBR	NBL	NBT	NBR	SBL	SBT	SBR
Lane Configurations												
Traffic Volume (veh/h)	643	779	322	195	1395	23	219	510	119	91	691	294
Future Volume (veh/h)	643	779	322	195	1395	23	219	510	119	91	691	294
Number	5	2	12	1	6	16	3	8	18	7	4	14
Initial Q (Qb), veh	0	0	0	0	0	0	0	0	0	0	0	0
Ped-Bike Adj(A_pbT)	1.00		1.00	1.00		1.00	1.00		1.00	1.00		1.00
Parking Bus, Adj	1.00	1.00	1.00	1.00	1.00	1.00	1.00	1.00	1.00	1.00	1.00	1.00
Adj Sat Flow, veh/h/ln	1863	1863	1900	1863	1863	1863	1863	1863	1863	1863	1863	1863
Adj Flow Rate, veh/h	722	906	383	212	1468	0	243	567	153	105	743	0
Adj No. of Lanes	2	2	0	1	2	1	1	2	1	1	2	1
Peak Hour Factor	0.89	0.86	0.84	0.92	0.95	0.69	0.90	0.90	0.78	0.87	0.93	0.86
Percent Heavy Veh, %	2	2	2	2	2	2	2	2	2	2	2	2
Cap, veh/h	656	1142	479	234	1359	608	209	807	527	201	675	302
Arrive On Green	0.19	0.47	0.47	0.11	0.38	0.00	0.09	0.23	0.23	0.05	0.19	0.00
Sat Flow, veh/h	3442	2432	1020	1774	3539	1583	1774	3539	1583	1774	3539	1583
Grp Volume(v), veh/h	722	657	632	212	1468	0	243	567	153	105	743	0
Grp Sat Flow(s),veh/h/ln	1721	1770	1683	1774	1770	1583	1774	1770	1583	1774	1770	1583
Q Serve(g_s), s	28.6	47.0	47.8	13.6	57.6	0.0	13.6	22.1	10.7	7.1	28.6	0.0
Cycle Q Clear(g_c), s	28.6	47.0	47.8	13.6	57.6	0.0	13.6	22.1	10.7	7.1	28.6	0.0
Prop In Lane	1.00		0.61	1.00		1.00	1.00		1.00	1.00		1.00
Lane Grp Cap(c), veh/h	656	831	790	234	1359	608	209	807	527	201	675	302
V/C Ratio(X)	1.10	0.79	0.80	0.90	1.08	0.00	1.16	0.70	0.29	0.52	1.10	0.00
Avail Cap(c_a), veh/h	656	831	790	267	1359	608	209	807	527	201	675	302
HCM Platoon Ratio	1.00	1.00	1.00	1.00	1.00	1.00	1.00	1.00	1.00	1.00	1.00	1.00
Upstream Filter(I)	1.00	1.00	1.00	0.78	0.78	0.00	1.00	1.00	1.00	1.00	1.00	0.00
Uniform Delay (d), s/veh	60.7	33.6	33.8	42.9	46.2	0.0	46.2	53.2	36.9	46.6	60.7	0.0
Incr Delay (d2), s/veh	65.8	5.2	5.8	24.5	46.8	0.0	113.4	2.8	0.3	2.4	65.6	0.0
Initial Q Delay(d3),s/veh	0.0	0.0	0.0	0.0	0.0	0.0	0.0	0.0	0.0	0.0	0.0	0.0
%ile BackOfQ(50%),veh/ln	19.6	24.2	23.4	10.3	37.0	0.0	8.5	11.1	4.7	3.6	20.1	0.0
LnGrp Delay(d),s/veh	126.5	38.8	39.6	67.5	93.0	0.0	159.6	56.0	37.2	49.0	126.3	0.0
LnGrp LOS	F	D	D	E	F		F	E	D	D	F	
Approach Vol, veh/h		2011			1680			963			848	
Approach Delay, s/veh		70.5			89.8			79.1			116.7	
Approach LOS		E			F			E			F	

Timer	1	2	3	4	5	6	7	8
Assigned Phs	1	2	3	4	5	6	7	8
Phs Duration (G+Y+Rc), s	21.2	75.8	19.0	34.0	34.0	63.0	13.4	39.6
Change Period (Y+Rc), s	5.4	5.4	5.4	5.4	5.4	5.4	5.4	5.4
Max Green Setting (Gmax), s	18.5	67.7	13.6	28.6	28.6	57.6	8.0	34.2
Max Q Clear Time (g_c+I1), s	15.6	49.8	15.6	30.6	30.6	59.6	9.1	24.1
Green Ext Time (p_c), s	0.2	10.9	0.0	0.0	0.0	0.0	0.0	6.0

Intersection Summary	
HCM 2010 Ctrl Delay	85.0
HCM 2010 LOS	F

Movement	EBL	EBT	EBR	WBL	WBT	WBR	NBL	NBT	NBR	SBL	SBT	SBR
Lane Configurations												
Traffic Volume (veh/h)	0	803	176	188	1214	0	0	0	0	379	21	309
Future Volume (veh/h)	0	803	176	188	1214	0	0	0	0	379	21	309
Number	5	2	12	1	6	16				7	4	14
Initial Q (Qb), veh	0	0	0	0	0	0				0	0	0
Ped-Bike Adj(A_pbT)	1.00		1.00	1.00		1.00				1.00		1.00
Parking Bus, Adj	1.00	1.00	1.00	1.00	1.00	1.00				1.00	1.00	1.00
Adj Sat Flow, veh/h/ln	0	1863	1863	1863	1863	0				1863	1863	1863
Adj Flow Rate, veh/h	0	956	0	235	1278	0				443	0	0
Adj No. of Lanes	0	4	1	2	2	0				2	0	1
Peak Hour Factor	1.00	0.84	0.92	0.80	0.95	1.00				0.91	0.56	0.90
Percent Heavy Veh, %	0	2	2	2	2	0				2	2	2
Cap, veh/h	0	4243	1048	288	2767	0				519	0	232
Arrive On Green	0.00	0.66	0.00	0.08	0.78	0.00				0.15	0.00	0.00
Sat Flow, veh/h	0	6669	1583	3442	3632	0				3548	0	1583
Grp Volume(v), veh/h	0	956	0	235	1278	0				443	0	0
Grp Sat Flow(s),veh/h/ln	0	1602	1583	1721	1770	0				1774	0	1583
Q Serve(g_s), s	0.0	8.9	0.0	10.1	18.5	0.0				18.3	0.0	0.0
Cycle Q Clear(g_c), s	0.0	8.9	0.0	10.1	18.5	0.0				18.3	0.0	0.0
Prop In Lane	0.00		1.00	1.00		0.00				1.00		1.00
Lane Grp Cap(c), veh/h	0	4243	1048	288	2767	0				519	0	232
V/C Ratio(X)	0.00	0.23	0.00	0.82	0.46	0.00				0.85	0.00	0.00
Avail Cap(c_a), veh/h	0	4243	1048	473	2767	0				1292	0	576
HCM Platoon Ratio	1.00	1.00	1.00	1.00	1.00	1.00				1.00	1.00	1.00
Upstream Filter(I)	0.00	0.60	0.00	0.90	0.90	0.00				1.00	0.00	0.00
Uniform Delay (d), s/veh	0.0	10.1	0.0	67.6	5.6	0.0				62.5	0.0	0.0
Incr Delay (d2), s/veh	0.0	0.1	0.0	5.1	0.5	0.0				4.1	0.0	0.0
Initial Q Delay(d3),s/veh	0.0	0.0	0.0	0.0	0.0	0.0				0.0	0.0	0.0
%ile BackOfQ(50%),veh/ln	0.0	3.9	0.0	5.0	9.1	0.0				9.3	0.0	0.0
LnGrp Delay(d),s/veh	0.0	10.1	0.0	72.7	6.1	0.0				66.6	0.0	0.0
LnGrp LOS		B		E	A					E		
Approach Vol, veh/h		956			1513						443	
Approach Delay, s/veh		10.1			16.4						66.6	
Approach LOS		B			B						E	

Timer	1	2	3	4	5	6	7	8
Assigned Phs	1	2		4		6		
Phs Duration (G+Y+Rc), s	18.0	104.7		27.3		122.7		
Change Period (Y+Rc), s	5.4	5.4		5.4		5.4		
Max Green Setting (Gmax), s	20.6	58.6		54.6		84.6		
Max Q Clear Time (g_c+I1), s	12.1	10.9		20.3		20.5		
Green Ext Time (p_c), s	0.5	26.0		1.7		29.7		

Intersection Summary	
HCM 2010 Ctrl Delay	22.0
HCM 2010 LOS	C

Notes

User approved volume balancing among the lanes for turning movement.

Movement	EBL	EBT	EBR	WBL	WBT	WBR	NBL	NBT	NBR	SBL	SBT	SBR
Lane Configurations												
Traffic Volume (veh/h)	157	995	0	0	1198	423	156	89	181	0	0	0
Future Volume (veh/h)	157	995	0	0	1198	423	156	89	181	0	0	0
Number	5	2	12	1	6	16	3	8	18			
Initial Q (Qb), veh	0	0	0	0	0	0	0	0	0			
Ped-Bike Adj(A_pbT)	1.00		1.00	1.00		1.00	1.00		1.00			
Parking Bus, Adj	1.00	1.00	1.00	1.00	1.00	1.00	1.00	1.00	1.00			
Adj Sat Flow, veh/h/ln	1863	1863	0	0	1863	1900	1863	1863	1863			
Adj Flow Rate, veh/h	180	1118	0	0	1261	0	181	105	0			
Adj No. of Lanes	2	2	0	0	4	0	2	1	1			
Peak Hour Factor	0.87	0.89	1.00	1.00	0.95	0.91	0.86	0.85	0.84			
Percent Heavy Veh, %	2	2	0	0	2	2	2	2	2			
Cap, veh/h	1095	3013	0	0	3187	0	272	143	121			
Arrive On Green	0.64	1.00	0.00	0.00	0.50	0.00	0.08	0.08	0.00			
Sat Flow, veh/h	3442	3632	0	0	6929	0	3548	1863	1583			
Grp Volume(v), veh/h	180	1118	0	0	1261	0	181	105	0			
Grp Sat Flow(s),veh/h/ln	1721	1770	0	0	1602	0	1774	1863	1583			
Q Serve(g_s), s	3.2	0.0	0.0	0.0	18.5	0.0	7.4	8.3	0.0			
Cycle Q Clear(g_c), s	3.2	0.0	0.0	0.0	18.5	0.0	7.4	8.3	0.0			
Prop In Lane	1.00		0.00	0.00		0.00	1.00		1.00			
Lane Grp Cap(c), veh/h	1095	3013	0	0	3187	0	272	143	121			
V/C Ratio(X)	0.16	0.37	0.00	0.00	0.40	0.00	0.67	0.74	0.00			
Avail Cap(c_a), veh/h	1095	3013	0	0	3187	0	913	479	407			
HCM Platoon Ratio	2.00	2.00	1.00	1.00	1.00	1.00	1.00	1.00	1.00			
Upstream Filter(I)	0.95	0.95	0.00	0.00	1.00	0.00	1.00	1.00	0.00			
Uniform Delay (d), s/veh	19.2	0.0	0.0	0.0	23.6	0.0	67.4	67.8	0.0			
Incr Delay (d2), s/veh	0.1	0.3	0.0	0.0	0.4	0.0	2.8	7.2	0.0			
Initial Q Delay(d3),s/veh	0.0	0.0	0.0	0.0	0.0	0.0	0.0	0.0	0.0			
%ile BackOfQ(50%),veh/ln	1.5	0.1	0.0	0.0	8.2	0.0	3.8	4.5	0.0			
LnGrp Delay(d),s/veh	19.3	0.3	0.0	0.0	24.0	0.0	70.2	74.9	0.0			
LnGrp LOS	B	A			C		E	E				
Approach Vol, veh/h		1298			1261			286				
Approach Delay, s/veh		3.0			24.0			71.9				
Approach LOS		A			C			E				

Timer	1	2	3	4	5	6	7	8
Assigned Phs		2			5	6		8
Phs Duration (G+Y+Rc), s		133.1			53.1	80.0		16.9
Change Period (Y+Rc), s		5.4			5.4	5.4		5.4
Max Green Setting (Gmax), s		100.6			20.6	74.6		38.6
Max Q Clear Time (g_c+I1), s		2.0			5.2	20.5		10.3
Green Ext Time (p_c), s		11.4			7.3	11.1		1.2

Intersection Summary	
HCM 2010 Ctrl Delay	19.2
HCM 2010 LOS	B

Notes

User approved volume balancing among the lanes for turning movement.

User approved ignoring U-Turning movement.

Movement	EBL	EBT	EBR	WBL	WBT	WBR	NBL	NBT	NBR	SBL	SBT	SBR
Lane Configurations												
Traffic Volume (veh/h)	88	726	276	226	1348	64	219	217	49	65	276	68
Future Volume (veh/h)	88	726	276	226	1348	64	219	217	49	65	276	68
Number	5	2	12	1	6	16	3	8	18	7	4	14
Initial Q (Qb), veh	0	0	0	0	0	0	0	0	0	0	0	0
Ped-Bike Adj(A_pbT)	1.00		1.00	1.00		1.00	1.00		1.00	1.00		1.00
Parking Bus, Adj	1.00	1.00	1.00	1.00	1.00	1.00	1.00	1.00	1.00	1.00	1.00	1.00
Adj Sat Flow, veh/h/ln	1863	1863	1900	1863	1863	1900	1863	1863	1863	1863	1863	1863
Adj Flow Rate, veh/h	105	798	321	235	1390	100	249	271	58	89	310	81
Adj No. of Lanes	1	2	0	1	2	0	1	1	1	1	1	1
Peak Hour Factor	0.84	0.91	0.86	0.96	0.97	0.64	0.88	0.80	0.84	0.73	0.89	0.84
Percent Heavy Veh, %	2	2	2	2	2	2	2	2	2	2	2	2
Cap, veh/h	177	1139	457	298	1678	120	292	497	555	275	348	366
Arrive On Green	0.04	0.46	0.46	0.08	0.50	0.50	0.12	0.27	0.27	0.04	0.19	0.19
Sat Flow, veh/h	1774	2467	991	1774	3350	240	1774	1863	1583	1774	1863	1583
Grp Volume(v), veh/h	105	572	547	235	732	758	249	271	58	89	310	81
Grp Sat Flow(s),veh/h/ln	1774	1770	1688	1774	1770	1820	1774	1863	1583	1774	1863	1583
Q Serve(g_s), s	4.7	38.6	38.7	10.1	52.8	53.4	16.6	18.7	3.7	6.1	24.3	6.2
Cycle Q Clear(g_c), s	4.7	38.6	38.7	10.1	52.8	53.4	16.6	18.7	3.7	6.1	24.3	6.2
Prop In Lane	1.00		0.59	1.00		0.13	1.00		1.00	1.00		1.00
Lane Grp Cap(c), veh/h	177	817	779	298	887	912	292	497	555	275	348	366
V/C Ratio(X)	0.59	0.70	0.70	0.79	0.83	0.83	0.85	0.55	0.10	0.32	0.89	0.22
Avail Cap(c_a), veh/h	210	817	779	399	887	912	292	534	586	275	385	397
HCM Platoon Ratio	1.00	1.00	1.00	1.00	1.00	1.00	1.00	1.00	1.00	1.00	1.00	1.00
Upstream Filter(I)	1.00	1.00	1.00	0.73	0.73	0.73	1.00	1.00	1.00	1.00	1.00	1.00
Uniform Delay (d), s/veh	30.2	32.1	32.1	27.1	31.8	32.0	42.7	47.2	32.9	46.9	59.5	46.7
Incr Delay (d2), s/veh	3.1	5.0	5.2	5.5	6.5	6.5	20.9	1.0	0.1	0.7	20.5	0.3
Initial Q Delay(d3),s/veh	0.0	0.0	0.0	0.0	0.0	0.0	0.0	0.0	0.0	0.0	0.0	0.0
%ile BackOfQ(50%),veh/ln	2.4	19.9	19.2	5.4	27.4	28.4	9.7	9.8	1.6	3.0	14.6	2.8
LnGrp Delay(d),s/veh	33.3	37.1	37.4	32.6	38.3	38.5	63.6	48.2	32.9	47.5	80.0	47.0
LnGrp LOS	C	D	D	C	D	D	E	D	C	D	E	D
Approach Vol, veh/h		1224			1725			578			480	
Approach Delay, s/veh		36.9			37.6			53.3			68.4	
Approach LOS		D			D			D			E	

Timer	1	2	3	4	5	6	7	8
Assigned Phs	1	2	3	4	5	6	7	8
Phs Duration (G+Y+Rc), s	17.9	74.7	24.0	33.5	12.0	80.6	12.0	45.4
Change Period (Y+Rc), s	5.4	5.4	5.4	5.4	5.4	5.4	5.4	5.4
Max Green Setting (Gmax), s	21.0	57.8	18.6	31.0	9.4	69.4	6.6	43.0
Max Q Clear Time (g_c+I1), s	12.1	40.7	18.6	26.3	6.7	55.4	8.1	20.7
Green Ext Time (p_c), s	0.4	13.9	0.0	1.7	0.1	11.7	0.0	4.1

Intersection Summary	
HCM 2010 Ctrl Delay	43.3
HCM 2010 LOS	D

Movement	EBL	EBT	WBT	WBR	SBL	SBR
Lane Configurations						
Traffic Volume (veh/h)	36	808	1627	80	198	65
Future Volume (veh/h)	36	808	1627	80	198	65
Number	5	2	6	16	7	14
Initial Q (Qb), veh	0	0	0	0	0	0
Ped-Bike Adj(A_pbT)	1.00			1.00	1.00	1.00
Parking Bus, Adj	1.00	1.00	1.00	1.00	1.00	1.00
Adj Sat Flow, veh/h/ln	1863	1863	1863	1900	1863	1863
Adj Flow Rate, veh/h	47	878	1643	95	241	88
Adj No. of Lanes	1	2	2	0	1	1
Peak Hour Factor	0.77	0.92	0.99	0.84	0.82	0.74
Percent Heavy Veh, %	2	2	2	2	2	2
Cap, veh/h	204	2747	2641	152	269	241
Arrive On Green	1.00	1.00	0.78	0.78	0.15	0.15
Sat Flow, veh/h	277	3632	3495	196	1774	1583
Grp Volume(v), veh/h	47	878	850	888	241	88
Grp Sat Flow(s),veh/h/ln	277	1770	1770	1828	1774	1583
Q Serve(g_s), s	8.9	0.0	31.0	31.7	20.0	7.5
Cycle Q Clear(g_c), s	40.6	0.0	31.0	31.7	20.0	7.5
Prop In Lane	1.00			0.11	1.00	1.00
Lane Grp Cap(c), veh/h	204	2747	1373	1419	269	241
V/C Ratio(X)	0.23	0.32	0.62	0.63	0.89	0.37
Avail Cap(c_a), veh/h	204	2747	1373	1419	397	355
HCM Platoon Ratio	2.00	2.00	1.00	1.00	1.00	1.00
Upstream Filter(I)	0.64	0.64	0.60	0.60	1.00	1.00
Uniform Delay (d), s/veh	5.5	0.0	7.2	7.3	62.4	57.1
Incr Delay (d2), s/veh	1.7	0.2	0.5	0.5	16.2	0.9
Initial Q Delay(d3),s/veh	0.0	0.0	0.0	0.0	0.0	0.0
%ile BackOfQ(50%),veh/ln	0.8	0.1	15.1	16.0	11.1	3.3
LnGrp Delay(d),s/veh	7.2	0.2	7.7	7.8	78.6	58.0
LnGrp LOS	A	A	A	A	E	E
Approach Vol, veh/h		925	1738		329	
Approach Delay, s/veh		0.6	7.8		73.1	
Approach LOS		A	A		E	

Timer	1	2	3	4	5	6	7	8
Assigned Phs		2		4		6		
Phs Duration (G+Y+Rc), s		121.8		28.2		121.8		
Change Period (Y+Rc), s		5.4		5.4		5.4		
Max Green Setting (Gmax), s		105.6		33.6		105.6		
Max Q Clear Time (g_c+I1), s		42.6		22.0		33.7		
Green Ext Time (p_c), s		39.5		0.8		42.6		

Intersection Summary	
HCM 2010 Ctrl Delay	12.7
HCM 2010 LOS	B

Movement	EBL	EBT	EBR	WBL	WBT	WBR	NBL	NBT	NBR	SBL	SBT	SBR
Lane Configurations												
Traffic Volume (veh/h)	234	594	11	10	1546	37	66	5	9	131	3	363
Future Volume (veh/h)	234	594	11	10	1546	37	66	5	9	131	3	363
Number	5	2	12	1	6	16	3	8	18	7	4	14
Initial Q (Qb), veh	0	0	0	0	0	0	0	0	0	0	0	0
Ped-Bike Adj(A_pbT)	1.00		1.00	1.00		1.00	1.00		1.00	1.00		1.00
Parking Bus, Adj	1.00	1.00	1.00	1.00	1.00	1.00	1.00	1.00	1.00	1.00	1.00	1.00
Adj Sat Flow, veh/h/ln	1863	1863	1900	1863	1863	1900	1900	1863	1863	1900	1863	1863
Adj Flow Rate, veh/h	269	660	16	12	1737	52	108	16	12	152	8	399
Adj No. of Lanes	1	2	0	1	2	0	0	1	1	0	1	1
Peak Hour Factor	0.87	0.90	0.69	0.83	0.89	0.71	0.61	0.31	0.75	0.86	0.38	0.91
Percent Heavy Veh, %	2	2	2	2	2	2	2	2	2	2	2	2
Cap, veh/h	294	2628	64	504	2104	63	303	39	291	307	14	463
Arrive On Green	0.11	0.74	0.74	0.60	0.60	0.60	0.18	0.18	0.18	0.18	0.18	0.18
Sat Flow, veh/h	1774	3532	86	760	3509	105	1404	212	1583	1412	74	1583
Grp Volume(v), veh/h	269	331	345	12	873	916	124	0	12	160	0	399
Grp Sat Flow(s),veh/h/ln	1774	1770	1848	760	1770	1844	1617	0	1583	1486	0	1583
Q Serve(g_s), s	13.7	8.8	8.8	1.0	58.5	59.3	0.0	0.0	0.9	4.8	0.0	27.6
Cycle Q Clear(g_c), s	13.7	8.8	8.8	1.0	58.5	59.3	9.2	0.0	0.9	14.0	0.0	27.6
Prop In Lane	1.00		0.05	1.00		0.06	0.87		1.00	0.95		1.00
Lane Grp Cap(c), veh/h	294	1317	1375	504	1061	1106	342	0	291	320	0	463
V/C Ratio(X)	0.91	0.25	0.25	0.02	0.82	0.83	0.36	0.00	0.04	0.50	0.00	0.86
Avail Cap(c_a), veh/h	393	1317	1375	504	1061	1106	342	0	291	320	0	463
HCM Platoon Ratio	1.00	1.00	1.00	1.00	1.00	1.00	1.00	1.00	1.00	1.00	1.00	1.00
Upstream Filter(I)	0.96	0.96	0.96	1.00	1.00	1.00	1.00	0.00	1.00	1.00	0.00	1.00
Uniform Delay (d), s/veh	44.2	6.0	6.0	12.2	23.7	23.9	53.7	0.0	50.3	55.4	0.0	50.2
Incr Delay (d2), s/veh	20.7	0.4	0.4	0.1	7.2	7.2	0.6	0.0	0.1	1.2	0.0	15.3
Initial Q Delay(d3),s/veh	0.0	0.0	0.0	0.0	0.0	0.0	0.0	0.0	0.0	0.0	0.0	0.0
%ile BackOfQ(50%),veh/ln	12.7	4.4	4.6	0.2	30.5	32.2	4.6	0.0	0.4	6.2	0.0	17.6
LnGrp Delay(d),s/veh	64.9	6.5	6.5	12.3	30.9	31.1	54.3	0.0	50.4	56.6	0.0	65.5
LnGrp LOS	E	A	A	B	C	C	D		D	E		E
Approach Vol, veh/h		945			1801			136			559	
Approach Delay, s/veh		23.1			30.9			54.0			63.0	
Approach LOS		C			C			D			E	

Timer	1	2	3	4	5	6	7	8
Assigned Phs		2		4	5	6		8
Phs Duration (G+Y+Rc), s		117.0		33.0	21.6	95.4		33.0
Change Period (Y+Rc), s		5.4		5.4	5.4	5.4		5.4
Max Green Setting (Gmax), s		111.6		27.6	24.6	81.6		27.6
Max Q Clear Time (g_c+I1), s		10.8		29.6	15.7	61.3		11.2
Green Ext Time (p_c), s		39.3		0.0	0.5	15.7		2.9

Intersection Summary	
HCM 2010 Ctrl Delay	34.9
HCM 2010 LOS	C

Movement	EBL	EBT	EBR	WBL	WBT	WBR	NBL	NBT	NBR	SBL	SBT	SBR
Lane Configurations												
Traffic Volume (veh/h)	339	166	269	261	309	29	305	1367	83	75	2713	424
Future Volume (veh/h)	339	166	269	261	309	29	305	1367	83	75	2713	424
Number	5	2	12	1	6	16	3	8	18	7	4	14
Initial Q (Qb), veh	0	0	0	0	0	0	0	0	0	0	0	0
Ped-Bike Adj(A_pbT)	1.00		1.00	1.00		1.00	1.00		1.00	1.00		1.00
Parking Bus, Adj	1.00	1.00	1.00	1.00	1.00	1.00	1.00	1.00	1.00	1.00	1.00	1.00
Adj Sat Flow, veh/h/ln	1863	1863	1863	1863	1863	1900	1863	1863	1900	1863	1863	1863
Adj Flow Rate, veh/h	381	195	0	230	450	41	339	1424	104	101	2981	511
Adj No. of Lanes	2	1	1	1	2	0	2	3	0	1	3	1
Peak Hour Factor	0.89	0.85	0.86	0.85	0.90	0.70	0.90	0.96	0.80	0.74	0.91	0.83
Percent Heavy Veh, %	2	2	2	2	2	2	2	2	2	2	2	2
Cap, veh/h	416	219	186	232	440	40	312	2729	199	212	2631	819
Arrive On Green	0.04	0.04	0.00	0.13	0.13	0.13	0.09	0.56	0.56	0.04	0.52	0.52
Sat Flow, veh/h	3548	1863	1583	1774	3366	305	3442	4837	353	1774	5085	1583
Grp Volume(v), veh/h	381	195	0	230	248	243	339	998	530	101	2981	511
Grp Sat Flow(s),veh/h/ln	1774	1863	1583	1774	1863	1809	1721	1695	1800	1774	1695	1583
Q Serve(g_s), s	16.1	15.6	0.0	19.4	19.6	19.6	13.6	27.3	27.3	4.6	77.6	34.5
Cycle Q Clear(g_c), s	16.1	15.6	0.0	19.4	19.6	19.6	13.6	27.3	27.3	4.6	77.6	34.5
Prop In Lane	1.00		1.00	1.00		0.17	1.00		0.20	1.00		1.00
Lane Grp Cap(c), veh/h	416	219	186	232	243	236	312	1913	1016	212	2631	819
V/C Ratio(X)	0.92	0.89	0.00	0.99	1.02	1.03	1.09	0.52	0.52	0.48	1.13	0.62
Avail Cap(c_a), veh/h	416	219	186	232	243	236	312	1913	1016	277	2631	819
HCM Platoon Ratio	0.33	0.33	0.33	1.00	1.00	1.00	1.00	1.00	1.00	1.00	1.00	1.00
Upstream Filter(I)	1.00	1.00	0.00	1.00	1.00	1.00	1.00	1.00	1.00	1.00	1.00	1.00
Uniform Delay (d), s/veh	71.4	71.2	0.0	65.1	65.2	65.2	68.2	20.2	20.2	24.4	36.2	25.8
Incr Delay (d2), s/veh	27.2	38.2	0.0	56.8	62.9	65.8	76.0	0.3	0.5	1.6	65.3	1.5
Initial Q Delay(d3),s/veh	0.0	0.0	0.0	0.0	0.1	0.1	0.0	0.0	0.0	0.0	0.0	0.0
%ile BackOfQ(50%),veh/ln	9.5	10.4	0.0	13.2	14.3	14.1	9.8	12.8	13.7	2.3	51.9	15.4
LnGrp Delay(d),s/veh	98.6	109.3	0.0	121.9	128.2	131.0	144.2	20.4	20.7	26.0	101.5	27.3
LnGrp LOS	F	F		F	F	F	F	C	C	C	F	C
Approach Vol, veh/h		576			721			1867			3593	
Approach Delay, s/veh		102.2			127.2			43.0			88.8	
Approach LOS		F			F			D			F	

Timer	1	2	3	4	5	6	7	8
Assigned Phs		2	3	4		6	7	8
Phs Duration (G+Y+Rc), s		23.0	19.0	83.0		25.0	12.0	90.0
Change Period (Y+Rc), s		5.4	5.4	5.4		5.4	5.4	5.4
Max Green Setting (Gmax), s		17.6	13.6	77.6		19.6	12.0	79.2
Max Q Clear Time (g_c+I1), s		18.1	15.6	79.6		21.6	6.6	29.3
Green Ext Time (p_c), s		0.0	0.0	0.0		0.0	0.1	19.2

Intersection Summary	
HCM 2010 Ctrl Delay	81.4
HCM 2010 LOS	F

Notes

User approved volume balancing among the lanes for turning movement.

Movement	EBL	EBT	EBR	WBL	WBT	WBR	NBL	NBT	NBR	SBL	SBT	SBR
Lane Configurations												
Traffic Volume (veh/h)	23	272	37	19	481	45	29	33	9	62	129	116
Future Volume (veh/h)	23	272	37	19	481	45	29	33	9	62	129	116
Number	5	2	12	1	6	16	3	8	18	7	4	14
Initial Q (Qb), veh	0	0	0	0	0	0	0	0	0	0	0	0
Ped-Bike Adj(A_pbT)	1.00		1.00	1.00		1.00	1.00		1.00	1.00		1.00
Parking Bus, Adj	1.00	1.00	1.00	1.00	1.00	1.00	1.00	1.00	1.00	1.00	1.00	1.00
Adj Sat Flow, veh/h/ln	1863	1863	1900	1863	1863	1900	1863	1863	1900	1863	1863	1900
Adj Flow Rate, veh/h	32	309	52	28	559	56	41	52	12	84	136	171
Adj No. of Lanes	1	1	0	1	1	0	1	1	0	1	1	0
Peak Hour Factor	0.72	0.88	0.71	0.68	0.86	0.80	0.70	0.63	0.75	0.74	0.95	0.68
Percent Heavy Veh, %	2	2	2	2	2	2	2	2	2	2	2	2
Cap, veh/h	246	637	107	423	678	68	217	290	67	428	162	204
Arrive On Green	0.03	0.41	0.41	0.03	0.41	0.41	0.04	0.20	0.20	0.06	0.22	0.22
Sat Flow, veh/h	1774	1555	262	1774	1666	167	1774	1465	338	1774	751	945
Grp Volume(v), veh/h	32	0	361	28	0	615	41	0	64	84	0	307
Grp Sat Flow(s),veh/h/ln	1774	0	1817	1774	0	1833	1774	0	1803	1774	0	1696
Q Serve(g_s), s	0.7	0.0	10.4	0.6	0.0	21.2	1.3	0.0	2.1	2.6	0.0	12.3
Cycle Q Clear(g_c), s	0.7	0.0	10.4	0.6	0.0	21.2	1.3	0.0	2.1	2.6	0.0	12.3
Prop In Lane	1.00		0.14	1.00		0.09	1.00		0.19	1.00		0.56
Lane Grp Cap(c), veh/h	246	0	745	423	0	746	217	0	357	428	0	367
V/C Ratio(X)	0.13	0.00	0.48	0.07	0.00	0.82	0.19	0.00	0.18	0.20	0.00	0.84
Avail Cap(c_a), veh/h	316	0	988	497	0	997	278	0	484	472	0	469
HCM Platoon Ratio	1.00	1.00	1.00	1.00	1.00	1.00	1.00	1.00	1.00	1.00	1.00	1.00
Upstream Filter(I)	1.00	0.00	1.00	1.00	0.00	1.00	1.00	0.00	1.00	1.00	0.00	1.00
Uniform Delay (d), s/veh	14.6	0.0	15.4	12.2	0.0	18.8	22.0	0.0	23.6	20.7	0.0	26.6
Incr Delay (d2), s/veh	0.2	0.0	0.5	0.1	0.0	4.3	0.4	0.0	0.2	0.2	0.0	10.2
Initial Q Delay(d3),s/veh	0.0	0.0	0.0	0.0	0.0	0.0	0.0	0.0	0.0	0.0	0.0	0.0
%ile BackOfQ(50%),veh/ln	0.4	0.0	5.2	0.3	0.0	11.5	0.6	0.0	1.1	1.3	0.0	6.7
LnGrp Delay(d),s/veh	14.9	0.0	15.9	12.2	0.0	23.1	22.4	0.0	23.8	20.9	0.0	36.7
LnGrp LOS	B		B	B		C	C		C	C		D
Approach Vol, veh/h		393			643			105			391	
Approach Delay, s/veh		15.8			22.6			23.3			33.3	
Approach LOS		B			C			C			C	

Timer	1	2	3	4	5	6	7	8
Assigned Phs	1	2	3	4	5	6	7	8
Phs Duration (G+Y+Rc), s	7.5	34.4	8.2	20.7	7.7	34.2	9.4	19.4
Change Period (Y+Rc), s	5.4	5.4	5.4	5.4	5.4	5.4	5.4	5.4
Max Green Setting (Gmax), s	5.1	38.5	5.2	19.6	5.1	38.5	5.8	19.0
Max Q Clear Time (g_c+I1), s	2.6	12.4	3.3	14.3	2.7	23.2	4.6	4.1
Green Ext Time (p_c), s	0.0	6.9	0.0	1.0	0.0	5.6	0.0	2.0

Intersection Summary	
HCM 2010 Ctrl Delay	23.6
HCM 2010 LOS	C

Movement	EBL	EBT	EBR	WBL	WBT	WBR	NBL	NBT	NBR	SBL	SBT	SBR
Lane Configurations												
Traffic Volume (veh/h)	32	280	63	332	430	21	55	174	29	32	493	69
Future Volume (veh/h)	32	280	63	332	430	21	55	174	29	32	493	69
Number	5	2	12	1	6	16	3	8	18	7	4	14
Initial Q (Qb), veh	0	0	0	0	0	0	0	0	0	0	0	0
Ped-Bike Adj(A_pbT)	1.00		1.00	1.00		1.00	1.00		1.00	1.00		1.00
Parking Bus, Adj	1.00	1.00	1.00	1.00	1.00	1.00	1.00	1.00	1.00	1.00	1.00	1.00
Adj Sat Flow, veh/h/ln	1863	1863	1900	1863	1863	1900	1863	1863	1900	1863	1863	1900
Adj Flow Rate, veh/h	40	326	95	382	524	30	64	200	36	48	560	84
Adj No. of Lanes	1	1	0	1	1	0	1	1	0	1	1	0
Peak Hour Factor	0.80	0.86	0.66	0.87	0.82	0.71	0.86	0.87	0.81	0.67	0.88	0.82
Percent Heavy Veh, %	2	2	2	2	2	2	2	2	2	2	2	2
Cap, veh/h	239	342	100	405	702	40	126	542	98	411	553	83
Arrive On Green	0.03	0.25	0.25	0.19	0.40	0.40	0.04	0.35	0.35	0.03	0.35	0.35
Sat Flow, veh/h	1774	1387	404	1774	1745	100	1774	1537	277	1774	1583	238
Grp Volume(v), veh/h	40	0	421	382	0	554	64	0	236	48	0	644
Grp Sat Flow(s),veh/h/ln	1774	0	1791	1774	0	1845	1774	0	1814	1774	0	1821
Q Serve(g_s), s	2.0	0.0	27.6	20.2	0.0	30.6	2.7	0.0	11.5	2.0	0.0	41.6
Cycle Q Clear(g_c), s	2.0	0.0	27.6	20.2	0.0	30.6	2.7	0.0	11.5	2.0	0.0	41.6
Prop In Lane	1.00		0.23	1.00		0.05	1.00		0.15	1.00		0.13
Lane Grp Cap(c), veh/h	239	0	442	405	0	742	126	0	639	411	0	636
V/C Ratio(X)	0.17	0.00	0.95	0.94	0.00	0.75	0.51	0.00	0.37	0.12	0.00	1.01
Avail Cap(c_a), veh/h	260	0	442	405	0	742	138	0	639	428	0	636
HCM Platoon Ratio	1.00	1.00	1.00	1.00	1.00	1.00	1.00	1.00	1.00	1.00	1.00	1.00
Upstream Filter(I)	1.00	0.00	1.00	1.00	0.00	1.00	1.00	0.00	1.00	1.00	0.00	1.00
Uniform Delay (d), s/veh	32.5	0.0	44.2	32.8	0.0	30.5	30.6	0.0	28.7	23.9	0.0	38.8
Incr Delay (d2), s/veh	0.3	0.0	31.0	30.4	0.0	4.2	3.2	0.0	0.4	0.1	0.0	39.1
Initial Q Delay(d3),s/veh	0.0	0.0	0.0	0.0	0.0	0.0	0.0	0.0	0.0	0.0	0.0	0.0
%ile BackOfQ(50%),veh/ln	1.0	0.0	17.5	15.7	0.0	16.4	1.4	0.0	5.8	1.0	0.0	27.7
LnGrp Delay(d),s/veh	32.8	0.0	75.2	63.2	0.0	34.6	33.7	0.0	29.1	24.0	0.0	77.9
LnGrp LOS	C		E	E		C	C		C	C		F
Approach Vol, veh/h		461			936			300			692	
Approach Delay, s/veh		71.5			46.3			30.1			74.1	
Approach LOS		E			D			C			E	

Timer	1	2	3	4	5	6	7	8
Assigned Phs	1	2	3	4	5	6	7	8
Phs Duration (G+Y+Rc), s	27.6	34.8	9.8	47.0	9.1	53.3	9.4	47.4
Change Period (Y+Rc), s	5.4	5.4	5.4	5.4	5.4	5.4	5.4	5.4
Max Green Setting (Gmax), s	22.2	29.4	5.2	41.6	5.1	46.5	5.1	41.7
Max Q Clear Time (g_c+I1), s	22.2	29.6	4.7	43.6	4.0	32.6	4.0	13.5
Green Ext Time (p_c), s	0.0	0.0	0.0	0.0	0.0	5.3	0.0	6.7

Intersection Summary	
HCM 2010 Ctrl Delay	57.2
HCM 2010 LOS	E

Movement	EBL	EBT	EBR	WBL	WBT	WBR	NBL	NBT	NBR	SBL	SBT	SBR
Lane Configurations												
Traffic Volume (veh/h)	55	76	17	3	322	119	18	20	7	208	144	552
Future Volume (veh/h)	55	76	17	3	322	119	18	20	7	208	144	552
Number	5	2	12	1	6	16	3	8	18	7	4	14
Initial Q (Qb), veh	0	0	0	0	0	0	0	0	0	0	0	0
Ped-Bike Adj(A_pbT)	1.00		1.00	1.00		1.00	1.00		1.00	1.00		1.00
Parking Bus, Adj	1.00	1.00	1.00	1.00	1.00	1.00	1.00	1.00	1.00	1.00	1.00	1.00
Adj Sat Flow, veh/h/ln	1863	1863	1900	1863	1863	1900	1863	1863	1900	1863	1863	1863
Adj Flow Rate, veh/h	77	141	28	4	383	157	24	24	9	229	178	627
Adj No. of Lanes	1	1	0	1	1	0	1	1	0	1	1	1
Peak Hour Factor	0.71	0.54	0.61	0.75	0.84	0.76	0.75	0.83	0.75	0.91	0.81	0.88
Percent Heavy Veh, %	2	2	2	2	2	2	2	2	2	2	2	2
Cap, veh/h	232	627	124	525	522	214	353	571	214	686	823	700
Arrive On Green	0.42	0.42	0.42	0.42	0.42	0.42	0.44	0.44	0.44	0.44	0.44	0.44
Sat Flow, veh/h	862	1510	300	1211	1257	515	674	1293	485	1370	1863	1583
Grp Volume(v), veh/h	77	0	169	4	0	540	24	0	33	229	178	627
Grp Sat Flow(s),veh/h/ln	862	0	1810	1211	0	1772	674	0	1777	1370	1863	1583
Q Serve(g_s), s	6.2	0.0	4.5	0.2	0.0	19.4	1.7	0.0	0.8	8.6	4.5	27.6
Cycle Q Clear(g_c), s	25.6	0.0	4.5	4.7	0.0	19.4	6.2	0.0	0.8	9.4	4.5	27.6
Prop In Lane	1.00		0.17	1.00		0.29	1.00		0.27	1.00		1.00
Lane Grp Cap(c), veh/h	232	0	751	525	0	735	353	0	785	686	823	700
V/C Ratio(X)	0.33	0.00	0.22	0.01	0.00	0.73	0.07	0.00	0.04	0.33	0.22	0.90
Avail Cap(c_a), veh/h	315	0	925	642	0	906	418	0	956	818	1002	851
HCM Platoon Ratio	1.00	1.00	1.00	1.00	1.00	1.00	1.00	1.00	1.00	1.00	1.00	1.00
Upstream Filter(I)	1.00	0.00	1.00	1.00	0.00	1.00	1.00	0.00	1.00	1.00	1.00	1.00
Uniform Delay (d), s/veh	29.3	0.0	14.2	15.8	0.0	18.6	14.9	0.0	12.0	14.7	13.0	19.5
Incr Delay (d2), s/veh	0.8	0.0	0.2	0.0	0.0	2.4	0.1	0.0	0.0	0.3	0.1	10.6
Initial Q Delay(d3),s/veh	0.0	0.0	0.0	0.0	0.0	0.0	0.0	0.0	0.0	0.0	0.0	0.0
%ile BackOfQ(50%),veh/ln	1.5	0.0	2.3	0.1	0.0	9.9	0.3	0.0	0.4	3.3	2.3	14.1
LnGrp Delay(d),s/veh	30.2	0.0	14.4	15.8	0.0	21.0	15.0	0.0	12.0	14.9	13.1	30.1
LnGrp LOS	C		B	B		C	B		B	B	B	C
Approach Vol, veh/h		246			544			57			1034	
Approach Delay, s/veh		19.3			21.0			13.3			23.8	
Approach LOS		B			C			B			C	

Timer	1	2	3	4	5	6	7	8
Assigned Phs		2		4		6		8
Phs Duration (G+Y+Rc), s		36.7		38.8		36.7		38.8
Change Period (Y+Rc), s		5.4		5.4		5.4		5.4
Max Green Setting (Gmax), s		38.6		40.6		38.6		40.6
Max Q Clear Time (g_c+I1), s		27.6		29.6		21.4		8.2
Green Ext Time (p_c), s		3.7		3.7		4.7		5.2

Intersection Summary	
HCM 2010 Ctrl Delay	22.1
HCM 2010 LOS	C

Movement	EBL	EBT	EBR	WBL	WBT	WBR	NBL	NBT	NBR	SBL	SBT	SBR
Lane Configurations												
Traffic Volume (veh/h)	61	52	184	100	130	4	142	437	29	2	501	126
Future Volume (veh/h)	61	52	184	100	130	4	142	437	29	2	501	126
Number	5	2	12	1	6	16	3	8	18	7	4	14
Initial Q (Qb), veh	0	0	0	0	0	0	0	0	0	0	0	0
Ped-Bike Adj(A_pbT)	1.00		1.00	1.00		1.00	1.00		1.00	1.00		1.00
Parking Bus, Adj	1.00	1.00	1.00	1.00	1.00	1.00	1.00	1.00	1.00	1.00	1.00	1.00
Adj Sat Flow, veh/h/ln	1863	1863	1900	1863	1863	1900	1863	1863	1900	1863	1863	1900
Adj Flow Rate, veh/h	90	65	214	120	160	12	197	497	44	4	626	140
Adj No. of Lanes	1	1	0	1	1	0	1	1	0	1	1	0
Peak Hour Factor	0.68	0.80	0.86	0.83	0.81	0.33	0.72	0.88	0.66	0.50	0.80	0.90
Percent Heavy Veh, %	2	2	2	2	2	2	2	2	2	2	2	2
Cap, veh/h	290	65	214	190	298	22	246	872	77	363	653	146
Arrive On Green	0.06	0.17	0.17	0.06	0.17	0.17	0.08	0.52	0.52	0.01	0.44	0.44
Sat Flow, veh/h	1774	382	1258	1774	1712	128	1774	1687	149	1774	1475	330
Grp Volume(v), veh/h	90	0	279	120	0	172	197	0	541	4	0	766
Grp Sat Flow(s),veh/h/ln	1774	0	1641	1774	0	1840	1774	0	1836	1774	0	1805
Q Serve(g_s), s	3.6	0.0	14.9	4.9	0.0	7.5	5.0	0.0	17.7	0.1	0.0	36.0
Cycle Q Clear(g_c), s	3.6	0.0	14.9	4.9	0.0	7.5	5.0	0.0	17.7	0.1	0.0	36.0
Prop In Lane	1.00		0.77	1.00		0.07	1.00		0.08	1.00		0.18
Lane Grp Cap(c), veh/h	290	0	279	190	0	320	246	0	950	363	0	798
V/C Ratio(X)	0.31	0.00	1.00	0.63	0.00	0.54	0.80	0.00	0.57	0.01	0.00	0.96
Avail Cap(c_a), veh/h	293	0	279	190	0	320	278	0	950	455	0	816
HCM Platoon Ratio	1.00	1.00	1.00	1.00	1.00	1.00	1.00	1.00	1.00	1.00	1.00	1.00
Upstream Filter(I)	1.00	0.00	1.00	1.00	0.00	1.00	1.00	0.00	1.00	1.00	0.00	1.00
Uniform Delay (d), s/veh	27.9	0.0	36.3	29.0	0.0	33.0	19.5	0.0	14.5	14.1	0.0	23.6
Incr Delay (d2), s/veh	0.6	0.0	53.6	6.6	0.0	1.8	13.8	0.0	0.8	0.0	0.0	21.9
Initial Q Delay(d3),s/veh	0.0	0.0	0.0	0.0	0.0	0.0	0.0	0.0	0.0	0.0	0.0	0.0
%ile BackOfQ(50%),veh/ln	1.8	0.0	10.8	2.7	0.0	3.9	3.4	0.0	9.1	0.1	0.0	22.7
LnGrp Delay(d),s/veh	28.5	0.0	89.9	35.7	0.0	34.7	33.3	0.0	15.3	14.1	0.0	45.5
LnGrp LOS	C		F	D		C	C		B	B		D
Approach Vol, veh/h		369			292			738			770	
Approach Delay, s/veh		74.9			35.1			20.1			45.4	
Approach LOS		E			D			C			D	

Timer	1	2	3	4	5	6	7	8
Assigned Phs	1	2	3	4	5	6	7	8
Phs Duration (G+Y+Rc), s	10.7	20.3	12.4	44.1	10.4	20.6	5.9	50.7
Change Period (Y+Rc), s	5.4	5.4	5.4	5.4	5.4	5.4	5.4	5.4
Max Green Setting (Gmax), s	5.3	14.9	8.6	39.6	5.1	15.1	5.0	43.2
Max Q Clear Time (g_c+I1), s	6.9	16.9	7.0	38.0	5.6	9.5	2.1	19.7
Green Ext Time (p_c), s	0.0	0.0	0.1	0.7	0.0	1.3	0.0	10.4

Intersection Summary	
HCM 2010 Ctrl Delay	40.4
HCM 2010 LOS	D

Movement	EBL	EBT	EBR	WBL	WBT	WBR	NBL	NBT	NBR	SBL	SBT	SBR
Lane Configurations												
Traffic Volume (veh/h)	20	790	120	70	1730	20	0	0	50	10	10	10
Future Volume (veh/h)	20	790	120	70	1730	20	0	0	50	10	10	10
Number	5	2	12	1	6	16	3	8	18	7	4	14
Initial Q (Qb), veh	0	0	0	0	0	0	0	0	0	0	0	0
Ped-Bike Adj(A_pbT)	1.00		1.00	1.00		1.00	1.00		1.00	1.00		1.00
Parking Bus, Adj	1.00	1.00	1.00	1.00	1.00	1.00	1.00	1.00	1.00	1.00	1.00	1.00
Adj Sat Flow, veh/h/ln	1863	1863	1900	1863	1863	1900	0	1863	1900	1900	1863	1863
Adj Flow Rate, veh/h	22	859	130	76	1880	22	0	0	54	11	11	11
Adj No. of Lanes	1	2	0	1	2	0	0	1	0	0	1	1
Peak Hour Factor	0.92	0.92	0.92	0.92	0.92	0.92	0.92	0.92	0.92	0.92	0.92	0.92
Percent Heavy Veh, %	2	2	2	2	2	2	0	2	2	2	2	2
Cap, veh/h	233	2719	411	516	2958	35	0	0	73	46	32	73
Arrive On Green	0.04	1.00	1.00	0.83	0.83	0.83	0.00	0.00	0.05	0.05	0.05	0.05
Sat Flow, veh/h	1774	3083	467	567	3583	42	0	0	1583	213	701	1583
Grp Volume(v), veh/h	22	493	496	76	927	975	0	0	54	22	0	11
Grp Sat Flow(s),veh/h/ln	1774	1770	1780	567	1770	1855	0	0	1583	914	0	1583
Q Serve(g_s), s	0.3	0.0	0.0	4.0	28.8	29.0	0.0	0.0	5.1	0.0	0.0	1.0
Cycle Q Clear(g_c), s	0.3	0.0	0.0	4.0	28.8	29.0	0.0	0.0	5.1	5.1	0.0	1.0
Prop In Lane	1.00		0.26	1.00		0.02	0.00		1.00	0.50		1.00
Lane Grp Cap(c), veh/h	233	1560	1570	516	1461	1532	0	0	73	78	0	73
V/C Ratio(X)	0.09	0.32	0.32	0.15	0.63	0.64	0.00	0.00	0.74	0.28	0.00	0.15
Avail Cap(c_a), veh/h	275	1560	1570	516	1461	1532	0	0	91	96	0	91
HCM Platoon Ratio	2.00	2.00	2.00	1.00	1.00	1.00	1.00	1.00	1.00	1.00	1.00	1.00
Upstream Filter(I)	0.92	0.92	0.92	0.42	0.42	0.42	0.00	0.00	1.00	1.00	0.00	1.00
Uniform Delay (d), s/veh	4.9	0.0	0.0	2.6	4.8	4.8	0.0	0.0	70.6	69.1	0.0	68.7
Incr Delay (d2), s/veh	0.2	0.5	0.5	0.3	0.9	0.9	0.0	0.0	21.2	1.9	0.0	0.9
Initial Q Delay(d3),s/veh	0.0	0.0	0.0	0.0	0.0	0.0	0.0	0.0	0.0	0.0	0.0	0.0
%ile BackOfQ(50%),veh/ln	0.2	0.2	0.2	0.7	14.0	15.0	0.0	0.0	2.7	0.9	0.0	0.9
LnGrp Delay(d),s/veh	5.1	0.5	0.5	2.9	5.7	5.7	0.0	0.0	91.8	71.0	0.0	69.6
LnGrp LOS	A	A	A	A	A	A			F	E		E
Approach Vol, veh/h		1011			1978			54			33	
Approach Delay, s/veh		0.6			5.6			91.8			70.5	
Approach LOS		A			A			F			E	

Timer	1	2	3	4	5	6	7	8
Assigned Phs		2		4	5	6		8
Phs Duration (G+Y+Rc), s		137.7		12.3	8.4	129.3		12.3
Change Period (Y+Rc), s		5.4		5.4	5.4	5.4		5.4
Max Green Setting (Gmax), s		130.6		8.6	6.6	118.6		8.6
Max Q Clear Time (g_c+I1), s		2.0		7.1	2.3	31.0		7.1
Green Ext Time (p_c), s		65.6		0.0	0.0	54.0		0.0

Intersection Summary	
HCM 2010 Ctrl Delay	6.1
HCM 2010 LOS	A

Movement	EBL	EBT	EBR	WBL	WBT	WBR	NBL	NBT	NBR	SBL	SBT	SBR
Lane Configurations												
Traffic Volume (veh/h)	70	750	70	130	1530	80	180	120	120	60	0	20
Future Volume (veh/h)	70	750	70	130	1530	80	180	120	120	60	0	20
Number	5	2	12	1	6	16	3	8	18	7	4	14
Initial Q (Qb), veh	0	0	0	0	0	0	0	0	0	0	0	0
Ped-Bike Adj(A_pbT)	1.00		1.00	1.00		1.00	1.00		1.00	1.00		1.00
Parking Bus, Adj	1.00	1.00	1.00	1.00	1.00	1.00	1.00	1.00	1.00	1.00	1.00	1.00
Adj Sat Flow, veh/h/ln	1863	1863	1900	1863	1863	1900	1863	1863	1863	1863	1863	1863
Adj Flow Rate, veh/h	76	815	76	141	1663	87	196	130	130	65	0	22
Adj No. of Lanes	1	2	0	1	2	0	1	1	1	1	1	1
Peak Hour Factor	0.92	0.92	0.92	0.92	0.92	0.92	0.92	0.92	0.92	0.92	0.92	0.92
Percent Heavy Veh, %	2	2	2	2	2	2	2	2	2	2	2	2
Cap, veh/h	203	2175	203	532	2301	120	304	198	231	165	62	103
Arrive On Green	0.06	1.00	1.00	0.04	0.67	0.67	0.12	0.11	0.11	0.05	0.00	0.03
Sat Flow, veh/h	1774	3273	305	1774	3423	178	1774	1863	1583	1774	1863	1583
Grp Volume(v), veh/h	76	441	450	141	855	895	196	130	130	65	0	22
Grp Sat Flow(s),veh/h/ln	1774	1770	1809	1774	1770	1831	1774	1863	1583	1774	1863	1583
Q Serve(g_s), s	2.1	0.0	0.0	3.8	46.0	47.0	15.6	10.1	11.5	5.3	0.0	2.0
Cycle Q Clear(g_c), s	2.1	0.0	0.0	3.8	46.0	47.0	15.6	10.1	11.5	5.3	0.0	2.0
Prop In Lane	1.00		0.17	1.00		0.10	1.00		1.00	1.00		1.00
Lane Grp Cap(c), veh/h	203	1176	1202	532	1190	1231	304	198	231	165	62	103
V/C Ratio(X)	0.37	0.37	0.37	0.27	0.72	0.73	0.64	0.66	0.56	0.39	0.00	0.21
Avail Cap(c_a), veh/h	271	1176	1202	594	1190	1231	354	236	263	189	72	112
HCM Platoon Ratio	2.00	2.00	2.00	1.00	1.00	1.00	1.00	1.00	1.00	1.00	1.00	1.00
Upstream Filter(I)	0.91	0.91	0.91	0.74	0.74	0.74	1.00	1.00	1.00	1.00	0.00	1.00
Uniform Delay (d), s/veh	16.2	0.0	0.0	7.1	15.6	15.7	58.8	64.4	59.6	66.1	0.0	66.5
Incr Delay (d2), s/veh	1.0	0.8	0.8	0.2	2.8	2.8	3.1	4.9	2.1	1.5	0.0	1.0
Initial Q Delay(d3),s/veh	0.0	0.0	0.0	0.0	0.0	0.0	0.0	0.0	0.0	0.0	0.0	0.0
%ile BackOfQ(50%),veh/ln	1.3	0.3	0.3	1.9	23.3	24.6	7.8	5.5	5.2	2.6	0.0	0.9
LnGrp Delay(d),s/veh	17.3	0.8	0.8	7.3	18.4	18.6	61.9	69.3	61.7	67.6	0.0	67.5
LnGrp LOS	B	A	A	A	B	B	E	E	E	E		E
Approach Vol, veh/h		967			1891			456			87	
Approach Delay, s/veh		2.1			17.6			64.0			67.6	
Approach LOS		A			B			E			E	

Timer	1	2	3	4	5	6	7	8
Assigned Phs	1	2	3	4	5	6	7	8
Phs Duration (G+Y+Rc), s	11.4	105.1	23.2	10.4	10.2	106.3	12.2	21.4
Change Period (Y+Rc), s	5.4	5.4	5.4	5.4	5.4	5.4	5.4	5.4
Max Green Setting (Gmax), s	11.2	89.4	22.0	5.8	10.5	90.1	8.8	19.0
Max Q Clear Time (g_c+I1), s	5.8	2.0	17.6	4.0	4.1	49.0	7.3	13.5
Green Ext Time (p_c), s	0.1	41.8	0.2	0.2	0.1	27.8	0.0	0.6

Intersection Summary	
HCM 2010 Ctrl Delay	20.7
HCM 2010 LOS	C

Movement	EBL	EBT	WBT	WBR	SBL	SBR
Lane Configurations						
Traffic Volume (veh/h)	170	1510	2370	420	260	60
Future Volume (veh/h)	170	1510	2370	420	260	60
Number	5	2	6	16	7	14
Initial Q (Qb), veh	0	0	0	0	0	0
Ped-Bike Adj(A_pbT)	1.00			1.00	1.00	1.00
Parking Bus, Adj	1.00	1.00	1.00	1.00	1.00	1.00
Adj Sat Flow, veh/h/ln	1863	1863	1863	1900	1863	1863
Adj Flow Rate, veh/h	185	1641	2576	457	283	65
Adj No. of Lanes	1	3	3	0	2	1
Peak Hour Factor	0.92	0.92	0.92	0.92	0.92	0.92
Percent Heavy Veh, %	2	2	2	2	2	2
Cap, veh/h	206	4229	3148	528	332	153
Arrive On Green	0.16	1.00	0.72	0.72	0.10	0.10
Sat Flow, veh/h	1774	5253	4554	736	3442	1583
Grp Volume(v), veh/h	185	1641	1957	1076	283	65
Grp Sat Flow(s),veh/h/ln	1774	1695	1695	1733	1721	1583
Q Serve(g_s), s	9.5	0.0	57.9	69.3	12.1	5.8
Cycle Q Clear(g_c), s	9.5	0.0	57.9	69.3	12.1	5.8
Prop In Lane	1.00			0.42	1.00	1.00
Lane Grp Cap(c), veh/h	206	4229	2433	1243	332	153
V/C Ratio(X)	0.90	0.39	0.80	0.86	0.85	0.43
Avail Cap(c_a), veh/h	276	4229	2433	1243	381	175
HCM Platoon Ratio	2.00	2.00	1.00	1.00	1.00	1.00
Upstream Filter(I)	0.92	0.92	1.00	1.00	1.00	1.00
Uniform Delay (d), s/veh	48.1	0.0	14.2	15.8	66.7	63.9
Incr Delay (d2), s/veh	22.9	0.2	2.9	8.2	15.3	1.9
Initial Q Delay(d3),s/veh	0.0	0.0	0.0	0.0	0.0	0.0
%ile BackOfQ(50%),veh/ln	8.7	0.1	27.6	35.7	6.5	5.2
LnGrp Delay(d),s/veh	71.0	0.2	17.1	23.9	82.0	65.7
LnGrp LOS	E	A	B	C	F	E
Approach Vol, veh/h		1826	3033		348	
Approach Delay, s/veh		7.4	19.5		78.9	
Approach LOS		A	B		E	

Timer	1	2	3	4	5	6	7	8
Assigned Phs		2		4	5	6		
Phs Duration (G+Y+Rc), s		130.1		19.9	17.1	113.0		
Change Period (Y+Rc), s		5.4		5.4	5.4	5.4		
Max Green Setting (Gmax), s		122.6		16.6	17.6	99.6		
Max Q Clear Time (g_c+I1), s		2.0		14.1	11.5	71.3		
Green Ext Time (p_c), s		114.0		0.3	0.2	27.9		

Intersection Summary	
HCM 2010 Ctrl Delay	19.3
HCM 2010 LOS	B

Movement	EBT	EBR	WBL	WBT	NBL	NBR
Lane Configurations						
Traffic Volume (veh/h)	1500	60	50	2380	10	100
Future Volume (veh/h)	1500	60	50	2380	10	100
Number	2	12	1	6	3	18
Initial Q (Qb), veh	0	0	0	0	0	0
Ped-Bike Adj(A_pbT)		1.00	1.00		1.00	1.00
Parking Bus, Adj	1.00	1.00	1.00	1.00	1.00	1.00
Adj Sat Flow, veh/h/ln	1863	1900	1863	1863	1863	1863
Adj Flow Rate, veh/h	1630	65	54	2587	11	109
Adj No. of Lanes	3	0	1	3	1	2
Peak Hour Factor	0.92	0.92	0.92	0.92	0.92	0.92
Percent Heavy Veh, %	2	2	2	2	2	2
Cap, veh/h	4063	162	335	4452	93	146
Arrive On Green	1.00	1.00	0.03	0.88	0.05	0.05
Sat Flow, veh/h	5185	200	1774	5253	1774	2787
Grp Volume(v), veh/h	1101	594	54	2587	11	109
Grp Sat Flow(s),veh/h/ln	1695	1827	1774	1695	1774	1393
Q Serve(g_s), s	0.0	0.0	0.7	19.3	0.9	5.8
Cycle Q Clear(g_c), s	0.0	0.0	0.7	19.3	0.9	5.8
Prop In Lane		0.11	1.00		1.00	1.00
Lane Grp Cap(c), veh/h	2745	1480	335	4452	93	146
V/C Ratio(X)	0.40	0.40	0.16	0.58	0.12	0.75
Avail Cap(c_a), veh/h	2745	1480	407	4452	149	234
HCM Platoon Ratio	2.00	2.00	1.00	1.00	1.00	1.00
Upstream Filter(I)	0.89	0.89	0.37	0.37	1.00	1.00
Uniform Delay (d), s/veh	0.0	0.0	1.7	2.4	67.8	70.1
Incr Delay (d2), s/veh	0.4	0.7	0.1	0.2	0.6	7.3
Initial Q Delay(d3),s/veh	0.0	0.0	0.0	0.0	0.0	0.0
%ile BackOfQ(50%),veh/ln	0.1	0.3	0.3	8.9	0.5	2.4
LnGrp Delay(d),s/veh	0.4	0.7	1.8	2.6	68.3	77.4
LnGrp LOS	A	A	A	A	E	E
Approach Vol, veh/h	1695			2641	120	
Approach Delay, s/veh	0.5			2.6	76.6	
Approach LOS	A			A	E	

Timer	1	2	3	4	5	6	7	8
Assigned Phs	1	2				6		8
Phs Duration (G+Y+Rc), s	9.9	126.9				136.7		13.3
Change Period (Y+Rc), s	5.4	5.4				5.4		5.4
Max Green Setting (Gmax), s	10.6	110.6				126.6		12.6
Max Q Clear Time (g_c+I1), s	2.7	2.0				21.3		7.8
Green Ext Time (p_c), s	0.0	98.3				95.5		0.1

Intersection Summary	
HCM 2010 Ctrl Delay	3.8
HCM 2010 LOS	A

HCM 2010 analysis supports speed limit in the range of 25 and 55 mph

Movement	EBL	EBT	WBT	WBR	SBL	SBR
Lane Configurations						
Traffic Volume (veh/h)	140	1280	2120	110	60	40
Future Volume (veh/h)	140	1280	2120	110	60	40
Number	5	2	6	16	7	14
Initial Q (Qb), veh	0	0	0	0	0	0
Ped-Bike Adj(A_pbT)	1.00			1.00	1.00	1.00
Parking Bus, Adj	1.00	1.00	1.00	1.00	1.00	1.00
Adj Sat Flow, veh/h/ln	1863	1863	1863	1900	1863	1863
Adj Flow Rate, veh/h	152	1391	2304	120	65	43
Adj No. of Lanes	1	3	3	0	1	1
Peak Hour Factor	0.92	0.92	0.92	0.92	0.92	0.92
Percent Heavy Veh, %	2	2	2	2	2	2
Cap, veh/h	197	4466	4006	207	88	79
Arrive On Green	0.03	0.88	0.81	0.81	0.05	0.05
Sat Flow, veh/h	1774	5253	5119	256	1774	1583
Grp Volume(v), veh/h	152	1391	1572	852	65	43
Grp Sat Flow(s),veh/h/ln	1774	1695	1695	1818	1774	1583
Q Serve(g_s), s	2.0	6.9	24.8	25.3	5.4	4.0
Cycle Q Clear(g_c), s	2.0	6.9	24.8	25.3	5.4	4.0
Prop In Lane	1.00			0.14	1.00	1.00
Lane Grp Cap(c), veh/h	197	4466	2743	1470	88	79
V/C Ratio(X)	0.77	0.31	0.57	0.58	0.74	0.55
Avail Cap(c_a), veh/h	394	4466	2743	1470	161	144
HCM Platoon Ratio	1.00	1.00	1.00	1.00	1.00	1.00
Upstream Filter(I)	1.00	1.00	0.68	0.68	1.00	1.00
Uniform Delay (d), s/veh	23.9	1.5	5.1	5.1	70.3	69.6
Incr Delay (d2), s/veh	6.2	0.2	0.2	0.4	11.3	5.8
Initial Q Delay(d3),s/veh	0.0	0.0	0.0	0.0	0.0	0.0
%ile BackOfQ(50%),veh/ln	5.5	3.2	11.4	12.7	2.9	3.6
LnGrp Delay(d),s/veh	30.1	1.7	5.3	5.5	81.6	75.4
LnGrp LOS	C	A	A	A	F	E
Approach Vol, veh/h		1543	2424		108	
Approach Delay, s/veh		4.5	5.4		79.1	
Approach LOS		A	A		E	

Timer	1	2	3	4	5	6	7	8
Assigned Phs		2		4	5	6		
Phs Duration (G+Y+Rc), s		137.1		12.9	10.4	126.8		
Change Period (Y+Rc), s		5.4		5.4	5.4	5.4		
Max Green Setting (Gmax), s		125.6		13.6	21.6	98.6		
Max Q Clear Time (g_c+I1), s		8.9		7.4	4.0	27.3		
Green Ext Time (p_c), s		93.8		0.1	0.3	62.1		

Intersection Summary	
HCM 2010 Ctrl Delay	7.0
HCM 2010 LOS	A

Movement	EBL	EBT	EBR	WBL	WBT	WBR	NBL	NBT	NBR	SBL	SBT	SBR
Lane Configurations												
Traffic Volume (veh/h)	80	620	80	180	1100	180	90	0	130	150	0	70
Future Volume (veh/h)	80	620	80	180	1100	180	90	0	130	150	0	70
Number	5	2	12	1	6	16	3	8	18	7	4	14
Initial Q (Qb), veh	0	0	0	0	0	0	0	0	0	0	0	0
Ped-Bike Adj(A_pbT)	1.00		1.00	1.00		1.00	1.00		1.00	1.00		1.00
Parking Bus, Adj	1.00	1.00	1.00	1.00	1.00	1.00	1.00	1.00	1.00	1.00	1.00	1.00
Adj Sat Flow, veh/h/ln	1863	1863	1900	1863	1863	1900	1900	1863	1900	1900	1863	1863
Adj Flow Rate, veh/h	87	674	87	196	1196	196	98	0	141	163	0	76
Adj No. of Lanes	1	2	0	1	2	0	0	2	0	0	1	1
Peak Hour Factor	0.92	0.92	0.92	0.92	0.92	0.92	0.92	0.92	0.92	0.92	0.92	0.92
Percent Heavy Veh, %	2	2	2	2	2	2	2	2	2	2	2	2
Cap, veh/h	228	1741	225	461	1769	288	151	0	400	295	0	439
Arrive On Green	0.03	0.55	0.55	0.06	0.58	0.58	0.28	0.00	0.28	0.28	0.00	0.28
Sat Flow, veh/h	1774	3154	407	1774	3048	497	371	0	1441	891	0	1583
Grp Volume(v), veh/h	87	378	383	196	692	700	98	0	141	163	0	76
Grp Sat Flow(s),veh/h/ln	1774	1770	1791	1774	1770	1775	371	0	1441	891	0	1583
Q Serve(g_s), s	3.2	18.2	18.3	7.1	40.4	41.0	11.1	0.0	11.8	18.1	0.0	5.5
Cycle Q Clear(g_c), s	3.2	18.2	18.3	7.1	40.4	41.0	41.0	0.0	11.8	29.9	0.0	5.5
Prop In Lane	1.00		0.23	1.00		0.28	1.00		1.00	1.00		1.00
Lane Grp Cap(c), veh/h	228	977	989	461	1027	1030	151	0	400	295	0	439
V/C Ratio(X)	0.38	0.39	0.39	0.43	0.67	0.68	0.65	0.00	0.35	0.55	0.00	0.17
Avail Cap(c_a), veh/h	304	977	989	558	1027	1030	151	0	400	295	0	439
HCM Platoon Ratio	1.00	1.00	1.00	1.00	1.00	1.00	1.00	1.00	1.00	1.00	1.00	1.00
Upstream Filter(I)	0.94	0.94	0.94	0.09	0.09	0.09	1.00	0.00	1.00	1.00	0.00	1.00
Uniform Delay (d), s/veh	19.3	19.1	19.1	13.8	21.7	21.8	68.9	0.0	43.4	55.4	0.0	41.1
Incr Delay (d2), s/veh	1.0	1.1	1.1	0.1	0.3	0.3	9.4	0.0	0.5	2.2	0.0	0.2
Initial Q Delay(d3),s/veh	0.0	0.0	0.0	0.0	0.0	0.0	0.0	0.0	0.0	0.0	0.0	0.0
%ile BackOfQ(50%),veh/ln	1.6	9.2	9.3	3.4	19.7	20.1	4.5	0.0	4.8	6.4	0.0	2.4
LnGrp Delay(d),s/veh	20.3	20.2	20.2	13.9	22.0	22.1	78.3	0.0	43.9	57.6	0.0	41.3
LnGrp LOS	C	C	C	B	C	C	E		D	E		D
Approach Vol, veh/h		848			1588			239			239	
Approach Delay, s/veh		20.2			21.1			58.0			52.4	
Approach LOS		C			C			E			D	

Timer	1	2	3	4	5	6	7	8
Assigned Phs	1	2		4	5	6		8
Phs Duration (G+Y+Rc), s	14.8	88.2		47.0	10.5	92.5		47.0
Change Period (Y+Rc), s	5.4	5.4		5.4	5.4	5.4		5.4
Max Green Setting (Gmax), s	17.6	74.6		41.6	11.6	80.6		41.6
Max Q Clear Time (g_c+I1), s	9.1	20.3		31.9	5.2	43.0		43.0
Green Ext Time (p_c), s	0.3	24.1		2.0	0.1	20.4		0.0

Intersection Summary	
HCM 2010 Ctrl Delay	26.4
HCM 2010 LOS	C

Movement	EBL	EBT	EBR	WBL	WBT	WBR	NBL	NBT	NBR	SBL	SBT	SBR
Lane Configurations												
Traffic Volume (veh/h)	70	520	70	180	840	180	20	90	110	110	90	20
Future Volume (veh/h)	70	520	70	180	840	180	20	90	110	110	90	20
Number	5	2	12	1	6	16	3	8	18	7	4	14
Initial Q (Qb), veh	0	0	0	0	0	0	0	0	0	0	0	0
Ped-Bike Adj(A_pbT)	1.00		1.00	1.00		1.00	1.00		1.00	1.00		1.00
Parking Bus, Adj	1.00	1.00	1.00	1.00	1.00	1.00	1.00	1.00	1.00	1.00	1.00	1.00
Adj Sat Flow, veh/h/ln	1863	1863	1900	1863	1863	1900	1863	1863	1900	1863	1863	1900
Adj Flow Rate, veh/h	76	565	76	196	913	196	22	98	120	120	98	22
Adj No. of Lanes	1	2	0	1	2	0	1	1	0	1	1	0
Peak Hour Factor	0.92	0.92	0.92	0.92	0.92	0.92	0.92	0.92	0.92	0.92	0.92	0.92
Percent Heavy Veh, %	2	2	2	2	2	2	2	2	2	2	2	2
Cap, veh/h	320	1814	243	609	1759	377	261	113	139	197	291	65
Arrive On Green	0.06	1.00	1.00	0.06	0.61	0.61	0.02	0.15	0.15	0.07	0.20	0.20
Sat Flow, veh/h	1774	3137	421	1774	2900	622	1774	763	935	1774	1474	331
Grp Volume(v), veh/h	76	318	323	196	557	552	22	0	218	120	0	120
Grp Sat Flow(s),veh/h/ln	1774	1770	1788	1774	1770	1753	1774	0	1698	1774	0	1804
Q Serve(g_s), s	2.7	0.0	0.0	6.6	27.1	27.2	1.6	0.0	18.8	8.4	0.0	8.6
Cycle Q Clear(g_c), s	2.7	0.0	0.0	6.6	27.1	27.2	1.6	0.0	18.8	8.4	0.0	8.6
Prop In Lane	1.00		0.24	1.00		0.35	1.00		0.55	1.00		0.18
Lane Grp Cap(c), veh/h	320	1023	1034	609	1073	1063	261	0	252	197	0	357
V/C Ratio(X)	0.24	0.31	0.31	0.32	0.52	0.52	0.08	0.00	0.86	0.61	0.00	0.34
Avail Cap(c_a), veh/h	389	1023	1034	745	1073	1063	292	0	358	236	0	476
HCM Platoon Ratio	2.00	2.00	2.00	1.00	1.00	1.00	1.00	1.00	1.00	1.00	1.00	1.00
Upstream Filter(I)	0.97	0.97	0.97	0.77	0.77	0.77	1.00	0.00	1.00	1.00	0.00	1.00
Uniform Delay (d), s/veh	13.5	0.0	0.0	10.7	17.0	17.0	52.5	0.0	62.4	49.2	0.0	51.7
Incr Delay (d2), s/veh	0.4	0.8	0.8	0.2	1.4	1.4	0.1	0.0	14.3	3.2	0.0	0.6
Initial Q Delay(d3),s/veh	0.0	0.0	0.0	0.0	0.0	0.0	0.0	0.0	0.0	0.0	0.0	0.0
%ile BackOfQ(50%),veh/ln	1.3	0.2	0.2	3.3	13.6	13.5	0.8	0.0	9.8	4.2	0.0	4.3
LnGrp Delay(d),s/veh	13.9	0.8	0.8	10.9	18.3	18.4	52.6	0.0	76.7	52.4	0.0	52.3
LnGrp LOS	B	A	A	B	B	B	D		E	D		D
Approach Vol, veh/h		717			1305			240			240	
Approach Delay, s/veh		2.2			17.2			74.5			52.3	
Approach LOS		A			B			E			D	

Timer	1	2	3	4	5	6	7	8
Assigned Phs	1	2	3	4	5	6	7	8
Phs Duration (G+Y+Rc), s	14.4	92.1	8.4	35.1	10.2	96.4	15.8	27.7
Change Period (Y+Rc), s	5.4	5.4	5.4	5.4	5.4	5.4	5.4	5.4
Max Green Setting (Gmax), s	20.6	62.6	5.6	39.6	10.6	72.6	13.6	31.6
Max Q Clear Time (g_c+I1), s	8.6	2.0	3.6	10.6	4.7	29.2	10.4	20.8
Green Ext Time (p_c), s	0.4	16.8	0.0	2.2	0.1	15.6	0.1	1.5

Intersection Summary	
HCM 2010 Ctrl Delay	21.8
HCM 2010 LOS	C

Movement	EBT	EBR	WBL	WBT	NBL	NBR
Lane Configurations						
Traffic Volume (veh/h)	540	140	210	630	60	90
Future Volume (veh/h)	540	140	210	630	60	90
Number	2	12	1	6	3	18
Initial Q (Qb), veh	0	0	0	0	0	0
Ped-Bike Adj(A_pbT)		1.00	1.00		1.00	1.00
Parking Bus, Adj	1.00	1.00	1.00	1.00	1.00	1.00
Adj Sat Flow, veh/h/ln	1863	1900	1863	1863	1863	1863
Adj Flow Rate, veh/h	587	152	228	685	65	98
Adj No. of Lanes	2	0	1	2	1	1
Peak Hour Factor	0.92	0.92	0.92	0.92	0.92	0.92
Percent Heavy Veh, %	2	2	2	2	2	2
Cap, veh/h	2161	558	636	3023	131	184
Arrive On Green	0.78	0.78	0.04	0.85	0.07	0.07
Sat Flow, veh/h	2879	720	1774	3632	1774	1583
Grp Volume(v), veh/h	372	367	228	685	65	98
Grp Sat Flow(s),veh/h/ln	1770	1736	1774	1770	1774	1583
Q Serve(g_s), s	9.0	9.0	3.7	5.2	5.3	8.7
Cycle Q Clear(g_c), s	9.0	9.0	3.7	5.2	5.3	8.7
Prop In Lane		0.41	1.00		1.00	1.00
Lane Grp Cap(c), veh/h	1373	1347	636	3023	131	184
V/C Ratio(X)	0.27	0.27	0.36	0.23	0.50	0.53
Avail Cap(c_a), veh/h	1373	1347	1017	3023	267	306
HCM Platoon Ratio	1.00	1.00	1.00	1.00	1.00	1.00
Upstream Filter(I)	1.00	1.00	0.82	0.82	1.00	1.00
Uniform Delay (d), s/veh	4.8	4.8	3.0	2.0	66.8	62.4
Incr Delay (d2), s/veh	0.5	0.5	0.3	0.0	2.9	2.4
Initial Q Delay(d3),s/veh	0.0	0.0	0.0	0.0	0.0	0.0
%ile BackOfQ(50%),veh/ln	4.5	4.5	1.8	2.5	2.7	3.9
LnGrp Delay(d),s/veh	5.3	5.3	3.3	2.0	69.7	64.8
LnGrp LOS	A	A	A	A	E	E
Approach Vol, veh/h	739			913	163	
Approach Delay, s/veh	5.3			2.3	66.8	
Approach LOS	A			A	E	

Timer	1	2	3	4	5	6	7	8
Assigned Phs	1	2				6		8
Phs Duration (G+Y+Rc), s	11.8	121.8				133.5		16.5
Change Period (Y+Rc), s	5.4	5.4				5.4		5.4
Max Green Setting (Gmax), s	38.6	72.6				116.6		22.6
Max Q Clear Time (g_c+I1), s	5.7	11.0				7.2		10.7
Green Ext Time (p_c), s	0.6	12.4				12.6		0.3

Intersection Summary	
HCM 2010 Ctrl Delay	9.3
HCM 2010 LOS	A

Movement	EBL	EBT	EBR	WBL	WBT	WBR	NBL	NBT	NBR	SBL	SBT	SBR
Lane Configurations												
Traffic Volume (veh/h)	60	520	60	80	500	80	110	90	20	110	90	20
Future Volume (veh/h)	60	520	60	80	500	80	110	90	20	110	90	20
Number	5	2	12	1	6	16	3	8	18	7	4	14
Initial Q (Qb), veh	0	0	0	0	0	0	0	0	0	0	0	0
Ped-Bike Adj(A_pbT)	1.00		1.00	1.00		1.00	1.00		1.00	1.00		1.00
Parking Bus, Adj	1.00	1.00	1.00	1.00	1.00	1.00	1.00	1.00	1.00	1.00	1.00	1.00
Adj Sat Flow, veh/h/ln	1863	1863	1900	1863	1863	1900	1863	1863	1900	1863	1863	1900
Adj Flow Rate, veh/h	65	565	65	87	543	87	120	98	22	120	98	22
Adj No. of Lanes	1	1	0	1	1	0	1	1	0	1	1	0
Peak Hour Factor	0.92	0.92	0.92	0.92	0.92	0.92	0.92	0.92	0.92	0.92	0.92	0.92
Percent Heavy Veh, %	2	2	2	2	2	2	2	2	2	2	2	2
Cap, veh/h	416	944	109	418	901	144	343	320	72	343	320	72
Arrive On Green	0.58	0.58	0.58	0.58	0.58	0.58	0.22	0.22	0.22	0.22	0.22	0.22
Sat Flow, veh/h	793	1641	189	793	1567	251	1266	1474	331	1266	1474	331
Grp Volume(v), veh/h	65	0	630	87	0	630	120	0	120	120	0	120
Grp Sat Flow(s),veh/h/ln	793	0	1829	793	0	1818	1266	0	1804	1266	0	1804
Q Serve(g_s), s	3.0	0.0	11.6	4.1	0.0	11.7	4.6	0.0	2.9	4.6	0.0	2.9
Cycle Q Clear(g_c), s	14.7	0.0	11.6	15.7	0.0	11.7	7.5	0.0	2.9	7.5	0.0	2.9
Prop In Lane	1.00		0.10	1.00		0.14	1.00		0.18	1.00		0.18
Lane Grp Cap(c), veh/h	416	0	1052	418	0	1046	343	0	392	343	0	392
V/C Ratio(X)	0.16	0.00	0.60	0.21	0.00	0.60	0.35	0.00	0.31	0.35	0.00	0.31
Avail Cap(c_a), veh/h	824	0	1992	825	0	1980	619	0	785	619	0	785
HCM Platoon Ratio	1.00	1.00	1.00	1.00	1.00	1.00	1.00	1.00	1.00	1.00	1.00	1.00
Upstream Filter(I)	1.00	0.00	1.00	1.00	0.00	1.00	1.00	0.00	1.00	1.00	0.00	1.00
Uniform Delay (d), s/veh	12.0	0.0	7.2	12.3	0.0	7.2	20.2	0.0	17.1	20.2	0.0	17.1
Incr Delay (d2), s/veh	0.2	0.0	0.5	0.2	0.0	0.6	0.6	0.0	0.4	0.6	0.0	0.4
Initial Q Delay(d3),s/veh	0.0	0.0	0.0	0.0	0.0	0.0	0.0	0.0	0.0	0.0	0.0	0.0
%ile BackOfQ(50%),veh/ln	0.7	0.0	5.9	0.9	0.0	5.9	1.7	0.0	1.5	1.7	0.0	1.5
LnGrp Delay(d),s/veh	12.1	0.0	7.7	12.5	0.0	7.7	20.8	0.0	17.5	20.8	0.0	17.5
LnGrp LOS	B		A	B		A	C		B	C		B
Approach Vol, veh/h		695			717			240			240	
Approach Delay, s/veh		8.1			8.3			19.2			19.2	
Approach LOS		A			A			B			B	

Timer	1	2	3	4	5	6	7	8
Assigned Phs		2		4		6		8
Phs Duration (G+Y+Rc), s		35.3		16.7		35.3		16.7
Change Period (Y+Rc), s		5.4		5.4		5.4		5.4
Max Green Setting (Gmax), s		56.6		22.6		56.6		22.6
Max Q Clear Time (g_c+I1), s		16.7		9.5		17.7		9.5
Green Ext Time (p_c), s		12.2		1.8		12.1		1.8

Intersection Summary	
HCM 2010 Ctrl Delay	11.0
HCM 2010 LOS	B

Movement	EBL	EBT	EBR	WBL	WBT	WBR	NBL	NBT	NBR	SBL	SBT	SBR
Lane Configurations												
Traffic Volume (veh/h)	103	290	118	51	312	822	254	1101	52	317	742	35
Future Volume (veh/h)	103	290	118	51	312	822	254	1101	52	317	742	35
Number	5	2	12	1	6	16	3	8	18	7	4	14
Initial Q (Qb), veh	0	0	0	0	0	0	0	0	0	0	0	0
Ped-Bike Adj(A_pbT)	1.00		1.00	1.00		1.00	1.00		1.00	1.00		1.00
Parking Bus, Adj	1.00	1.00	1.00	1.00	1.00	1.00	1.00	1.00	1.00	1.00	1.00	1.00
Adj Sat Flow, veh/h/ln	1863	1863	1900	1863	1863	1863	1863	1863	1900	1863	1863	1900
Adj Flow Rate, veh/h	149	326	148	73	520	934	374	1237	66	373	824	55
Adj No. of Lanes	1	1	0	1	1	1	1	2	0	1	2	0
Peak Hour Factor	0.69	0.89	0.80	0.70	0.60	0.88	0.68	0.89	0.79	0.85	0.90	0.64
Percent Heavy Veh, %	2	2	2	2	2	2	2	2	2	2	2	2
Cap, veh/h	152	445	202	232	685	583	394	1039	55	315	918	61
Arrive On Green	0.03	0.37	0.37	0.03	0.37	0.37	0.18	0.30	0.30	0.15	0.27	0.27
Sat Flow, veh/h	1774	1214	551	1774	1863	1583	1774	3418	182	1774	3368	225
Grp Volume(v), veh/h	149	0	474	73	520	934	374	640	663	373	433	446
Grp Sat Flow(s),veh/h/ln	1774	0	1765	1774	1863	1583	1774	1770	1831	1774	1770	1823
Q Serve(g_s), s	5.0	0.0	34.9	3.9	36.7	55.2	25.1	45.6	45.6	22.6	35.3	35.4
Cycle Q Clear(g_c), s	5.0	0.0	34.9	3.9	36.7	55.2	25.1	45.6	45.6	22.6	35.3	35.4
Prop In Lane	1.00		0.31	1.00		1.00	1.00		0.10	1.00		0.12
Lane Grp Cap(c), veh/h	152	0	647	232	685	583	394	538	557	315	482	497
V/C Ratio(X)	0.98	0.00	0.73	0.31	0.76	1.60	0.95	1.19	1.19	1.18	0.90	0.90
Avail Cap(c_a), veh/h	152	0	647	232	685	583	407	538	557	315	482	497
HCM Platoon Ratio	1.00	1.00	1.00	1.00	1.00	1.00	1.00	1.00	1.00	1.00	1.00	1.00
Upstream Filter(I)	1.00	0.00	1.00	1.00	1.00	1.00	1.00	1.00	1.00	1.00	1.00	1.00
Uniform Delay (d), s/veh	49.4	0.0	41.1	32.4	41.6	47.4	42.6	52.2	52.2	48.8	52.5	52.6
Incr Delay (d2), s/veh	66.8	0.0	4.3	0.8	4.9	279.3	31.2	102.6	103.1	110.0	19.4	18.9
Initial Q Delay(d3),s/veh	0.0	0.0	0.0	0.0	0.0	0.0	0.0	0.0	0.0	0.0	0.0	0.0
%ile BackOfQ(50%),veh/ln	6.7	0.0	17.8	1.9	19.9	69.3	18.7	37.6	39.0	22.7	19.9	20.5
LnGrp Delay(d),s/veh	116.2	0.0	45.4	33.2	46.5	326.7	73.8	154.8	155.3	158.8	71.9	71.5
LnGrp LOS	F		D	C	D	F	E	F	F	F	E	E
Approach Vol, veh/h		623			1527			1677			1252	
Approach Delay, s/veh		62.3			217.2			137.0			97.7	
Approach LOS		E			F			F			F	

Timer	1	2	3	4	5	6	7	8
Assigned Phs	1	2	3	4	5	6	7	8
Phs Duration (G+Y+Rc), s	10.6	60.4	32.7	46.3	10.4	60.6	28.0	51.0
Change Period (Y+Rc), s	5.4	5.4	5.4	5.4	5.4	5.4	5.4	5.4
Max Green Setting (Gmax), s	5.2	55.0	28.4	39.8	5.0	55.2	22.6	45.6
Max Q Clear Time (g_c+I1), s	5.9	36.9	27.1	37.4	7.0	57.2	24.6	47.6
Green Ext Time (p_c), s	0.0	10.3	0.2	2.2	0.0	0.0	0.0	0.0

Intersection Summary	
HCM 2010 Ctrl Delay	142.3
HCM 2010 LOS	F

Movement	EBL	EBT	EBR	WBL	WBT	WBR	NBL	NBT	NBR	SBL	SBT	SBR
Lane Configurations												
Traffic Volume (veh/h)	460	1088	61	349	634	727	64	1657	529	348	1259	119
Future Volume (veh/h)	460	1088	61	349	634	727	64	1657	529	348	1259	119
Number	5	2	12	1	6	16	3	8	18	7	4	14
Initial Q (Qb), veh	0	0	0	0	0	0	0	0	0	0	0	0
Ped-Bike Adj(A_pbT)	1.00		1.00	1.00		1.00	1.00		1.00	1.00		1.00
Parking Bus, Adj	1.00	1.00	1.00	1.00	1.00	1.00	1.00	1.00	1.00	1.00	1.00	1.00
Adj Sat Flow, veh/h/ln	1863	1863	1900	1863	1863	1863	1863	1863	1863	1863	1863	1900
Adj Flow Rate, veh/h	465	1236	81	426	893	817	94	1996	653	519	1464	135
Adj No. of Lanes	2	2	0	2	2	1	2	2	1	2	3	0
Peak Hour Factor	0.99	0.88	0.75	0.82	0.71	0.89	0.68	0.83	0.81	0.67	0.86	0.88
Percent Heavy Veh, %	2	2	2	2	2	2	2	2	2	2	2	2
Cap, veh/h	336	905	59	316	929	617	493	1366	756	437	1752	162
Arrive On Green	0.10	0.27	0.27	0.09	0.26	0.26	0.14	0.39	0.39	0.13	0.37	0.37
Sat Flow, veh/h	3442	3373	221	3442	3539	1583	3442	3539	1583	3442	4739	437
Grp Volume(v), veh/h	465	648	669	426	893	817	94	1996	653	519	1047	552
Grp Sat Flow(s),veh/h/ln	1721	1770	1824	1721	1770	1583	1721	1770	1583	1721	1695	1786
Q Serve(g_s), s	16.6	45.6	45.6	15.6	42.3	37.7	4.1	65.6	46.7	21.6	47.9	47.9
Cycle Q Clear(g_c), s	16.6	45.6	45.6	15.6	42.3	37.7	4.1	65.6	46.7	21.6	47.9	47.9
Prop In Lane	1.00		0.12	1.00		1.00	1.00		1.00	1.00		0.24
Lane Grp Cap(c), veh/h	336	475	489	316	929	617	493	1366	756	437	1254	660
V/C Ratio(X)	1.38	1.36	1.37	1.35	0.96	1.33	0.19	1.46	0.86	1.19	0.84	0.84
Avail Cap(c_a), veh/h	336	475	489	316	929	617	493	1366	756	437	1559	821
HCM Platoon Ratio	1.00	1.00	1.00	1.00	1.00	1.00	1.00	1.00	1.00	1.00	1.00	1.00
Upstream Filter(I)	0.78	0.78	0.78	1.00	1.00	1.00	1.00	1.00	1.00	1.00	1.00	1.00
Uniform Delay (d), s/veh	76.7	62.2	62.2	77.2	61.9	34.5	64.2	52.2	39.5	74.2	48.8	48.9
Incr Delay (d2), s/veh	186.7	174.5	175.8	176.6	20.8	157.3	0.2	211.8	10.2	105.0	3.4	6.2
Initial Q Delay(d3),s/veh	0.0	0.0	0.0	0.0	0.0	0.0	0.0	0.0	0.0	0.0	0.0	0.0
%ile BackOfQ(50%),veh/ln	16.6	45.3	46.8	15.2	23.4	43.4	2.0	72.2	22.6	16.6	23.0	24.7
LnGrp Delay(d),s/veh	263.4	236.7	238.0	253.8	82.6	191.8	64.3	264.0	49.6	179.2	52.2	55.1
LnGrp LOS	F	F	F	F	F	F	E	F	D	F	D	E
Approach Vol, veh/h		1782			2136			2743			2118	
Approach Delay, s/veh		244.1			158.5			206.1			84.1	
Approach LOS		F			F			F			F	

Timer	1	2	3	4	5	6	7	8
Assigned Phs	1	2	3	4	5	6	7	8
Phs Duration (G+Y+Rc), s	21.0	51.0	29.7	68.3	22.0	50.0	27.0	71.0
Change Period (Y+Rc), s	5.4	5.4	5.4	5.4	5.4	5.4	5.4	5.4
Max Green Setting (Gmax), s	15.6	45.6	9.0	78.2	16.6	44.6	21.6	65.6
Max Q Clear Time (g_c+I1), s	17.6	47.6	6.1	49.9	18.6	44.3	23.6	67.6
Green Ext Time (p_c), s	0.0	0.0	0.7	13.0	0.0	0.2	0.0	0.0

Intersection Summary	
HCM 2010 Ctrl Delay	172.8
HCM 2010 LOS	F

Movement	EBL	EBT	EBR	WBL	WBT	WBR	NBL	NBT	NBR	SBL	SBT	SBR
Lane Configurations												
Traffic Volume (veh/h)	60	2300	60	210	1710	210	30	0	30	310	20	20
Future Volume (veh/h)	60	2300	60	210	1710	210	30	0	30	310	20	20
Number	5	2	12	1	6	16	3	8	18	7	4	14
Initial Q (Qb), veh	0	0	0	0	0	0	0	0	0	0	0	0
Ped-Bike Adj(A_pbT)	1.00		1.00	1.00		1.00	1.00		1.00	1.00		1.00
Parking Bus, Adj	1.00	1.00	1.00	1.00	1.00	1.00	1.00	1.00	1.00	1.00	1.00	1.00
Adj Sat Flow, veh/h/ln	1863	1863	1900	1863	1863	1900	1900	1863	1900	1863	1863	1863
Adj Flow Rate, veh/h	65	2500	65	228	1859	228	33	0	33	353	0	22
Adj No. of Lanes	1	3	0	1	3	0	0	1	0	2	0	1
Peak Hour Factor	0.92	0.92	0.92	0.92	0.92	0.92	0.92	0.92	0.92	0.92	0.92	0.92
Percent Heavy Veh, %	2	2	2	2	2	2	2	2	2	2	2	2
Cap, veh/h	189	3333	86	251	3208	391	28	0	28	404	0	180
Arrive On Green	0.06	1.00	1.00	0.07	0.70	0.70	0.03	0.00	0.03	0.11	0.00	0.11
Sat Flow, veh/h	1774	5098	132	1774	4595	559	837	0	837	3548	0	1583
Grp Volume(v), veh/h	65	1659	906	228	1368	719	66	0	0	353	0	22
Grp Sat Flow(s),veh/h/ln	1774	1695	1839	1774	1695	1764	1673	0	0	1774	0	1583
Q Serve(g_s), s	2.1	0.0	0.0	9.8	34.7	35.3	5.6	0.0	0.0	16.6	0.0	2.1
Cycle Q Clear(g_c), s	2.1	0.0	0.0	9.8	34.7	35.3	5.6	0.0	0.0	16.6	0.0	2.1
Prop In Lane	1.00		0.07	1.00		0.32	0.50		0.50	1.00		1.00
Lane Grp Cap(c), veh/h	189	2217	1203	251	2367	1231	55	0	0	404	0	180
V/C Ratio(X)	0.34	0.75	0.75	0.91	0.58	0.58	1.20	0.00	0.00	0.87	0.00	0.12
Avail Cap(c_a), veh/h	241	2217	1203	379	2367	1231	55	0	0	513	0	229
HCM Platoon Ratio	2.00	2.00	2.00	1.00	1.00	1.00	1.00	1.00	1.00	1.00	1.00	1.00
Upstream Filter(I)	0.74	0.74	0.74	0.85	0.85	0.85	1.00	0.00	0.00	1.00	0.00	1.00
Uniform Delay (d), s/veh	11.9	0.0	0.0	31.6	13.0	13.1	82.2	0.0	0.0	74.1	0.0	67.7
Incr Delay (d2), s/veh	0.8	1.8	3.3	16.5	0.9	1.7	184.3	0.0	0.0	12.8	0.0	0.3
Initial Q Delay(d3),s/veh	0.0	0.0	0.0	0.0	0.0	0.0	0.0	0.0	0.0	0.0	0.0	0.0
%ile BackOfQ(50%),veh/ln	1.0	0.5	1.1	11.7	16.4	17.8	5.4	0.0	0.0	8.9	0.0	0.9
LnGrp Delay(d),s/veh	12.7	1.8	3.3	48.1	13.9	14.8	266.5	0.0	0.0	87.0	0.0	68.0
LnGrp LOS	B	A	A	D	B	B	F			F		E
Approach Vol, veh/h		2630			2315			66			375	
Approach Delay, s/veh		2.6			17.5			266.5			85.8	
Approach LOS		A			B			F			F	

Timer	1	2	3	4	5	6	7	8
Assigned Phs	1	2		4	5	6		8
Phs Duration (G+Y+Rc), s	17.7	116.6		24.8	10.2	124.1		11.0
Change Period (Y+Rc), s	5.4	5.4		5.4	5.4	5.4		5.4
Max Green Setting (Gmax), s	24.6	93.6		24.6	9.8	108.4		5.6
Max Q Clear Time (g_c+I1), s	11.8	2.0		18.6	4.1	37.3		7.6
Green Ext Time (p_c), s	0.5	86.4		0.7	0.0	67.9		0.0

Intersection Summary	
HCM 2010 Ctrl Delay	18.0
HCM 2010 LOS	B

Notes

User approved volume balancing among the lanes for turning movement.

Movement	EBL	EBT	EBR	WBL	WBT	WBR	NBL	NBT	NBR	SBL	SBT	SBR
Lane Configurations												
Traffic Volume (veh/h)	1549	1145	197	96	838	62	278	893	124	148	479	270
Future Volume (veh/h)	1549	1145	197	96	838	62	278	893	124	148	479	270
Number	5	2	12	1	6	16	3	8	18	7	4	14
Initial Q (Qb), veh	0	0	0	0	0	0	0	0	0	0	0	0
Ped-Bike Adj(A_pbT)	1.00		1.00	1.00		1.00	1.00		1.00	1.00		1.00
Parking Bus, Adj	1.00	1.00	1.00	1.00	1.00	1.00	1.00	1.00	1.00	1.00	1.00	1.00
Adj Sat Flow, veh/h/ln	1863	1863	1900	1863	1863	1863	1863	1863	1863	1863	1863	1863
Adj Flow Rate, veh/h	1844	1347	281	120	921	0	348	1076	157	161	544	0
Adj No. of Lanes	2	2	0	1	2	1	1	2	1	1	2	1
Peak Hour Factor	0.84	0.85	0.70	0.80	0.91	0.78	0.80	0.83	0.79	0.92	0.88	0.83
Percent Heavy Veh, %	2	2	2	2	2	2	2	2	2	2	2	2
Cap, veh/h	1348	1556	319	165	741	332	250	804	469	122	554	248
Arrive On Green	0.39	0.53	0.53	0.07	0.21	0.00	0.12	0.23	0.23	0.04	0.16	0.00
Sat Flow, veh/h	3442	2926	601	1774	3539	1583	1774	3539	1583	1774	3539	1583
Grp Volume(v), veh/h	1844	806	822	120	921	0	348	1076	157	161	544	0
Grp Sat Flow(s),veh/h/ln	1721	1770	1757	1774	1770	1583	1774	1770	1583	1774	1770	1583
Q Serve(g_s), s	66.6	66.6	69.9	10.0	35.6	0.0	19.6	38.6	13.2	7.6	26.0	0.0
Cycle Q Clear(g_c), s	66.6	66.6	69.9	10.0	35.6	0.0	19.6	38.6	13.2	7.6	26.0	0.0
Prop In Lane	1.00		0.34	1.00		1.00	1.00		1.00	1.00		1.00
Lane Grp Cap(c), veh/h	1348	941	934	165	741	332	250	804	469	122	554	248
V/C Ratio(X)	1.37	0.86	0.88	0.73	1.24	0.00	1.39	1.34	0.33	1.32	0.98	0.00
Avail Cap(c_a), veh/h	1348	941	934	165	741	332	250	804	469	122	554	248
HCM Platoon Ratio	1.00	1.00	1.00	1.00	1.00	1.00	1.00	1.00	1.00	1.00	1.00	1.00
Upstream Filter(I)	1.00	1.00	1.00	0.94	0.94	0.00	1.00	1.00	1.00	1.00	1.00	0.00
Uniform Delay (d), s/veh	51.7	34.2	35.0	61.1	67.2	0.0	53.5	65.7	46.7	65.2	71.5	0.0
Incr Delay (d2), s/veh	170.3	7.9	9.7	13.8	119.9	0.0	199.8	160.9	0.4	191.5	33.6	0.0
Initial Q Delay(d3),s/veh	0.0	0.0	0.0	0.0	0.0	0.0	0.0	0.0	0.0	0.0	0.0	0.0
%ile BackOfQ(50%),veh/ln	63.5	34.5	36.3	5.5	29.7	0.0	15.9	36.8	5.8	8.5	15.4	0.0
LnGrp Delay(d),s/veh	222.0	42.1	44.7	75.0	187.1	0.0	253.3	226.6	47.1	256.7	105.1	0.0
LnGrp LOS	F	D	D	E	F		F	F	D	F	F	
Approach Vol, veh/h		3472			1041			1581			705	
Approach Delay, s/veh		138.3			174.2			214.7			139.7	
Approach LOS		F			F			F			F	

Timer	1	2	3	4	5	6	7	8
Assigned Phs	1	2	3	4	5	6	7	8
Phs Duration (G+Y+Rc), s	17.2	95.8	25.0	32.0	72.0	41.0	13.0	44.0
Change Period (Y+Rc), s	5.4	5.4	5.4	5.4	5.4	5.4	5.4	5.4
Max Green Setting (Gmax), s	11.8	90.4	19.6	26.6	66.6	35.6	7.6	38.6
Max Q Clear Time (g_c+I1), s	12.0	71.9	21.6	28.0	68.6	37.6	9.6	40.6
Green Ext Time (p_c), s	0.0	16.4	0.0	0.0	0.0	0.0	0.0	0.0

Intersection Summary	
HCM 2010 Ctrl Delay	161.7
HCM 2010 LOS	F

Movement	EBL	EBT	EBR	WBL	WBT	WBR	NBL	NBT	NBR	SBL	SBT	SBR
Lane Configurations												
Traffic Volume (veh/h)	0	1281	188	184	868	0	0	0	0	316	16	6
Future Volume (veh/h)	0	1281	188	184	868	0	0	0	0	316	16	6
Number	5	2	12	1	6	16				7	4	14
Initial Q (Qb), veh	0	0	0	0	0	0				0	0	0
Ped-Bike Adj(A_pbT)	1.00		1.00	1.00		1.00				1.00		1.00
Parking Bus, Adj	1.00	1.00	1.00	1.00	1.00	1.00				1.00	1.00	1.00
Adj Sat Flow, veh/h/ln	0	1863	1863	1863	1863	0				1863	1863	1863
Adj Flow Rate, veh/h	0	1377	0	194	1009	0				379	0	0
Adj No. of Lanes	0	4	1	2	2	0				2	0	1
Peak Hour Factor	1.00	0.93	0.85	0.95	0.86	1.00				0.87	0.70	0.25
Percent Heavy Veh, %	0	2	2	2	2	0				2	2	2
Cap, veh/h	0	4548	1124	242	2873	0				442	0	197
Arrive On Green	0.00	0.71	0.00	0.07	0.81	0.00				0.12	0.00	0.00
Sat Flow, veh/h	0	6669	1583	3442	3632	0				3548	0	1583
Grp Volume(v), veh/h	0	1377	0	194	1009	0				379	0	0
Grp Sat Flow(s),veh/h/ln	0	1602	1583	1721	1770	0				1774	0	1583
Q Serve(g_s), s	0.0	13.5	0.0	9.4	12.8	0.0				17.8	0.0	0.0
Cycle Q Clear(g_c), s	0.0	13.5	0.0	9.4	12.8	0.0				17.8	0.0	0.0
Prop In Lane	0.00		1.00	1.00		0.00				1.00		1.00
Lane Grp Cap(c), veh/h	0	4548	1124	242	2873	0				442	0	197
V/C Ratio(X)	0.00	0.30	0.00	0.80	0.35	0.00				0.86	0.00	0.00
Avail Cap(c_a), veh/h	0	4548	1124	559	2873	0				1077	0	481
HCM Platoon Ratio	1.00	1.00	1.00	1.00	1.00	1.00				1.00	1.00	1.00
Upstream Filter(I)	0.00	0.38	0.00	0.90	0.90	0.00				1.00	0.00	0.00
Uniform Delay (d), s/veh	0.0	9.1	0.0	77.8	4.2	0.0				72.9	0.0	0.0
Incr Delay (d2), s/veh	0.0	0.1	0.0	5.5	0.3	0.0				4.9	0.0	0.0
Initial Q Delay(d3),s/veh	0.0	0.0	0.0	0.0	0.0	0.0				0.0	0.0	0.0
%ile BackOfQ(50%),veh/ln	0.0	5.9	0.0	4.7	6.3	0.0				9.0	0.0	0.0
LnGrp Delay(d),s/veh	0.0	9.2	0.0	83.3	4.5	0.0				77.8	0.0	0.0
LnGrp LOS		A		F	A					E		
Approach Vol, veh/h		1377			1203						379	
Approach Delay, s/veh		9.2			17.2						77.8	
Approach LOS		A			B						E	

Timer	1	2	3	4	5	6	7	8
Assigned Phs	1	2		4		6		
Phs Duration (G+Y+Rc), s	17.4	126.0		26.6		143.4		
Change Period (Y+Rc), s	5.4	5.4		5.4		5.4		
Max Green Setting (Gmax), s	27.6	74.6		51.6		107.6		
Max Q Clear Time (g_c+I1), s	11.4	15.5		19.8		14.8		
Green Ext Time (p_c), s	0.5	31.4		1.4		37.6		

Intersection Summary	
HCM 2010 Ctrl Delay	21.2
HCM 2010 LOS	C

Notes

User approved volume balancing among the lanes for turning movement.

Movement	EBL	EBT	EBR	WBL	WBT	WBR	NBL	NBT	NBR	SBL	SBT	SBR
Lane Configurations												
Traffic Volume (veh/h)	246	1338	0	0	909	605	172	78	190	0	0	0
Future Volume (veh/h)	246	1338	0	0	909	605	172	78	190	0	0	0
Number	5	2	12	1	6	16	3	8	18			
Initial Q (Qb), veh	0	0	0	0	0	0	0	0	0			
Ped-Bike Adj(A_pbT)	1.00		1.00	1.00		1.00	1.00		1.00			
Parking Bus, Adj	1.00	1.00	1.00	1.00	1.00	1.00	1.00	1.00	1.00			
Adj Sat Flow, veh/h/ln	1863	1863	0	0	1863	1900	1863	1863	1863			
Adj Flow Rate, veh/h	328	1520	0	0	957	0	249	85	0			
Adj No. of Lanes	2	2	0	0	4	0	2	1	1			
Peak Hour Factor	0.75	0.88	1.00	1.00	0.95	0.85	0.69	0.92	0.81			
Percent Heavy Veh, %	2	2	0	0	2	2	2	2	2			
Cap, veh/h	385	3001	0	0	4513	0	314	165	140			
Arrive On Green	0.04	0.28	0.00	0.00	0.70	0.00	0.09	0.09	0.00			
Sat Flow, veh/h	3442	3632	0	0	6929	0	3548	1863	1583			
Grp Volume(v), veh/h	328	1520	0	0	957	0	249	85	0			
Grp Sat Flow(s),veh/h/ln	1721	1770	0	0	1602	0	1774	1863	1583			
Q Serve(g_s), s	16.1	61.3	0.0	0.0	8.8	0.0	11.7	7.4	0.0			
Cycle Q Clear(g_c), s	16.1	61.3	0.0	0.0	8.8	0.0	11.7	7.4	0.0			
Prop In Lane	1.00		0.00	0.00		0.00	1.00		1.00			
Lane Grp Cap(c), veh/h	385	3001	0	0	4513	0	314	165	140			
V/C Ratio(X)	0.85	0.51	0.00	0.00	0.21	0.00	0.79	0.51	0.00			
Avail Cap(c_a), veh/h	619	3001	0	0	4513	0	931	489	415			
HCM Platoon Ratio	0.33	0.33	1.00	1.00	1.00	1.00	1.00	1.00	1.00			
Upstream Filter(I)	0.93	0.93	0.00	0.00	1.00	0.00	1.00	1.00	0.00			
Uniform Delay (d), s/veh	80.5	31.4	0.0	0.0	8.7	0.0	75.9	74.0	0.0			
Incr Delay (d2), s/veh	6.1	0.6	0.0	0.0	0.1	0.0	4.5	2.5	0.0			
Initial Q Delay(d3),s/veh	0.0	0.0	0.0	0.0	0.0	0.0	0.0	0.0	0.0			
%ile BackOfQ(50%),veh/ln	8.0	30.4	0.0	0.0	3.9	0.0	5.9	3.9	0.0			
LnGrp Delay(d),s/veh	86.5	32.0	0.0	0.0	8.8	0.0	80.4	76.4	0.0			
LnGrp LOS	F	C			A		F	E				
Approach Vol, veh/h		1848			957			334				
Approach Delay, s/veh		41.6			8.8			79.4				
Approach LOS		D			A			E				

Timer	1	2	3	4	5	6	7	8
Assigned Phs		2			5	6		8
Phs Duration (G+Y+Rc), s		149.5			24.4	125.1		20.5
Change Period (Y+Rc), s		5.4			5.4	5.4		5.4
Max Green Setting (Gmax), s		114.6			30.6	78.6		44.6
Max Q Clear Time (g_c+I1), s		63.3			18.1	10.8		13.7
Green Ext Time (p_c), s		31.3			0.9	36.4		1.4

Intersection Summary	
HCM 2010 Ctrl Delay	35.7
HCM 2010 LOS	D

Notes

User approved volume balancing among the lanes for turning movement.

User approved ignoring U-Turning movement.

Movement	EBL	EBT	EBR	WBL	WBT	WBR	NBL	NBT	NBR	SBL	SBT	SBR
Lane Configurations												
Traffic Volume (veh/h)	138	1148	161	105	890	73	360	384	150	109	239	142
Future Volume (veh/h)	138	1148	161	105	890	73	360	384	150	109	239	142
Number	5	2	12	1	6	16	3	8	18	7	4	14
Initial Q (Qb), veh	0	0	0	0	0	0	0	0	0	0	0	0
Ped-Bike Adj(A_pbT)	1.00		1.00	1.00		1.00	1.00		1.00	1.00		1.00
Parking Bus, Adj	1.00	1.00	1.00	1.00	1.00	1.00	1.00	1.00	1.00	1.00	1.00	1.00
Adj Sat Flow, veh/h/ln	1863	1863	1900	1863	1863	1900	1863	1863	1863	1863	1863	1863
Adj Flow Rate, veh/h	209	1276	209	144	1011	74	424	452	185	154	249	203
Adj No. of Lanes	1	2	0	1	2	0	1	1	1	1	1	1
Peak Hour Factor	0.66	0.90	0.77	0.73	0.88	0.98	0.85	0.85	0.81	0.71	0.96	0.70
Percent Heavy Veh, %	2	2	2	2	2	2	2	2	2	2	2	2
Cap, veh/h	285	1417	230	169	1484	109	420	528	538	206	275	356
Arrive On Green	0.08	0.46	0.46	0.06	0.44	0.44	0.20	0.28	0.28	0.07	0.15	0.15
Sat Flow, veh/h	1774	3049	496	1774	3344	245	1774	1863	1583	1774	1863	1583
Grp Volume(v), veh/h	209	736	749	144	535	550	424	452	185	154	249	203
Grp Sat Flow(s),veh/h/ln	1774	1770	1775	1774	1770	1820	1774	1863	1583	1774	1863	1583
Q Serve(g_s), s	10.8	64.9	66.3	7.5	41.0	41.0	34.7	39.0	14.8	11.6	22.4	19.4
Cycle Q Clear(g_c), s	10.8	64.9	66.3	7.5	41.0	41.0	34.7	39.0	14.8	11.6	22.4	19.4
Prop In Lane	1.00		0.28	1.00		0.13	1.00		1.00	1.00		1.00
Lane Grp Cap(c), veh/h	285	822	825	169	785	808	420	528	538	206	275	356
V/C Ratio(X)	0.73	0.90	0.91	0.85	0.68	0.68	1.01	0.86	0.34	0.75	0.91	0.57
Avail Cap(c_a), veh/h	354	822	825	200	785	808	420	534	543	206	281	361
HCM Platoon Ratio	1.00	1.00	1.00	1.00	1.00	1.00	1.00	1.00	1.00	1.00	1.00	1.00
Upstream Filter(I)	1.00	1.00	1.00	0.90	0.90	0.90	1.00	1.00	1.00	1.00	1.00	1.00
Uniform Delay (d), s/veh	30.4	41.7	42.1	38.7	37.7	37.7	50.4	57.6	41.9	59.5	71.3	58.6
Incr Delay (d2), s/veh	6.0	14.4	15.5	23.1	4.3	4.2	46.6	12.8	0.4	14.0	30.2	2.1
Initial Q Delay(d3),s/veh	0.0	0.0	0.0	0.0	0.0	0.0	0.0	0.0	0.0	0.0	0.0	0.0
%ile BackOfQ(50%),veh/ln	5.8	35.0	36.0	4.7	21.0	21.6	25.1	22.0	6.5	2.2	13.9	8.7
LnGrp Delay(d),s/veh	36.3	56.1	57.6	61.8	42.0	41.9	97.1	70.4	42.3	73.5	101.5	60.6
LnGrp LOS	D	E	E	E	D	D	F	E	D	E	F	E
Approach Vol, veh/h		1694			1229			1061			606	
Approach Delay, s/veh		54.3			44.2			76.2			80.7	
Approach LOS		D			D			E			F	

Timer	1	2	3	4	5	6	7	8
Assigned Phs	1	2	3	4	5	6	7	8
Phs Duration (G+Y+Rc), s	15.0	84.4	40.1	30.5	18.6	80.8	17.0	53.6
Change Period (Y+Rc), s	5.4	5.4	5.4	5.4	5.4	5.4	5.4	5.4
Max Green Setting (Gmax), s	12.6	75.5	34.7	25.6	19.8	68.3	11.6	48.7
Max Q Clear Time (g_c+I1), s	9.5	68.3	36.7	24.4	12.8	43.0	13.6	41.0
Green Ext Time (p_c), s	0.1	6.3	0.0	0.7	0.3	18.7	0.0	3.5

Intersection Summary	
HCM 2010 Ctrl Delay	60.2
HCM 2010 LOS	E

Movement	EBL	EBT	WBT	WBR	SBL	SBR
Lane Configurations						
Traffic Volume (veh/h)	29	1421	1000	81	137	63
Future Volume (veh/h)	29	1421	1000	81	137	63
Number	5	2	6	16	7	14
Initial Q (Qb), veh	0	0	0	0	0	0
Ped-Bike Adj(A_pbT)	1.00			1.00	1.00	1.00
Parking Bus, Adj	1.00	1.00	1.00	1.00	1.00	1.00
Adj Sat Flow, veh/h/ln	1863	1863	1863	1900	1863	1863
Adj Flow Rate, veh/h	37	1692	1111	145	176	84
Adj No. of Lanes	1	2	2	0	1	1
Peak Hour Factor	0.78	0.84	0.90	0.56	0.78	0.75
Percent Heavy Veh, %	2	2	2	2	2	2
Cap, veh/h	362	2913	2592	338	201	180
Arrive On Green	1.00	1.00	0.82	0.82	0.11	0.11
Sat Flow, veh/h	440	3632	3243	410	1774	1583
Grp Volume(v), veh/h	37	1692	623	633	176	84
Grp Sat Flow(s),veh/h/ln	440	1770	1770	1790	1774	1583
Q Serve(g_s), s	1.9	0.0	16.4	16.4	16.6	8.4
Cycle Q Clear(g_c), s	18.3	0.0	16.4	16.4	16.6	8.4
Prop In Lane	1.00			0.23	1.00	1.00
Lane Grp Cap(c), veh/h	362	2913	1457	1474	201	180
V/C Ratio(X)	0.10	0.58	0.43	0.43	0.87	0.47
Avail Cap(c_a), veh/h	362	2913	1457	1474	361	322
HCM Platoon Ratio	2.00	2.00	1.00	1.00	1.00	1.00
Upstream Filter(I)	0.38	0.38	0.91	0.91	1.00	1.00
Uniform Delay (d), s/veh	1.1	0.0	4.1	4.1	74.2	70.6
Incr Delay (d2), s/veh	0.2	0.3	0.2	0.2	11.3	1.9
Initial Q Delay(d3),s/veh	0.0	0.0	0.0	0.0	0.0	0.0
%ile BackOfQ(50%),veh/ln	0.2	0.1	7.9	8.2	8.8	3.8
LnGrp Delay(d),s/veh	1.3	0.3	4.3	4.3	85.4	72.4
LnGrp LOS	A	A	A	A	F	E
Approach Vol, veh/h		1729	1256		260	
Approach Delay, s/veh		0.3	4.3		81.2	
Approach LOS		A	A		F	

Timer	1	2	3	4	5	6	7	8
Assigned Phs		2		4		6		
Phs Duration (G+Y+Rc), s		145.3		24.7		145.3		
Change Period (Y+Rc), s		5.4		5.4		5.4		
Max Green Setting (Gmax), s		124.6		34.6		124.6		
Max Q Clear Time (g_c+I1), s		20.3		18.6		18.4		
Green Ext Time (p_c), s		60.4		0.7		61.0		

Intersection Summary	
HCM 2010 Ctrl Delay	8.4
HCM 2010 LOS	A

Movement	EBL	EBT	EBR	WBL	WBT	WBR	NBL	NBT	NBR	SBL	SBT	SBR
Lane Configurations												
Traffic Volume (veh/h)	578	1139	46	9	693	76	9	4	7	58	3	78
Future Volume (veh/h)	578	1139	46	9	693	76	9	4	7	58	3	78
Number	5	2	12	1	6	16	3	8	18	7	4	14
Initial Q (Qb), veh	0	0	0	0	0	0	0	0	0	0	0	0
Ped-Bike Adj(A_pbT)	1.00		1.00	1.00		1.00	1.00		1.00	1.00		1.00
Parking Bus, Adj	1.00	1.00	1.00	1.00	1.00	1.00	1.00	1.00	1.00	1.00	1.00	1.00
Adj Sat Flow, veh/h/ln	1863	1863	1900	1863	1863	1900	1900	1863	1863	1900	1863	1863
Adj Flow Rate, veh/h	635	1186	72	13	753	104	13	12	9	81	8	98
Adj No. of Lanes	1	2	0	1	2	0	0	1	1	0	1	1
Peak Hour Factor	0.91	0.96	0.64	0.67	0.92	0.73	0.67	0.33	0.75	0.72	0.38	0.80
Percent Heavy Veh, %	2	2	2	2	2	2	2	2	2	2	2	2
Cap, veh/h	663	2925	177	350	2188	302	89	72	117	140	10	324
Arrive On Green	0.13	0.86	0.86	0.70	0.70	0.70	0.07	0.07	0.07	0.07	0.07	0.07
Sat Flow, veh/h	1774	3390	206	439	3125	431	768	981	1583	1356	134	1583
Grp Volume(v), veh/h	635	619	639	13	426	431	25	0	9	89	0	98
Grp Sat Flow(s),veh/h/ln	1774	1770	1826	439	1770	1787	1750	0	1583	1490	0	1583
Q Serve(g_s), s	18.1	12.5	12.6	1.6	16.2	16.2	0.0	0.0	0.9	7.7	0.0	8.9
Cycle Q Clear(g_c), s	18.1	12.5	12.6	1.6	16.2	16.2	2.2	0.0	0.9	9.9	0.0	8.9
Prop In Lane	1.00		0.11	1.00		0.24	0.52		1.00	0.91		1.00
Lane Grp Cap(c), veh/h	663	1527	1576	350	1239	1251	161	0	117	150	0	324
V/C Ratio(X)	0.96	0.41	0.41	0.04	0.34	0.34	0.16	0.00	0.08	0.59	0.00	0.30
Avail Cap(c_a), veh/h	1219	1527	1576	350	1239	1251	246	0	201	226	0	409
HCM Platoon Ratio	1.00	1.00	1.00	1.00	1.00	1.00	1.00	1.00	1.00	1.00	1.00	1.00
Upstream Filter(I)	0.75	0.75	0.75	1.00	1.00	1.00	1.00	0.00	1.00	1.00	0.00	1.00
Uniform Delay (d), s/veh	16.4	2.5	2.5	7.9	10.1	10.1	73.9	0.0	73.4	77.3	0.0	57.3
Incr Delay (d2), s/veh	8.0	0.6	0.6	0.2	0.8	0.8	0.4	0.0	0.3	3.7	0.0	0.5
Initial Q Delay(d3),s/veh	0.0	0.0	0.0	0.0	0.0	0.0	0.0	0.0	0.0	0.0	0.0	0.0
%ile BackOfQ(50%),veh/ln	30.6	6.3	6.5	0.2	8.1	8.2	1.1	0.0	0.4	4.3	0.0	3.9
LnGrp Delay(d),s/veh	24.4	3.1	3.0	8.1	10.8	10.8	74.4	0.0	73.6	81.0	0.0	57.8
LnGrp LOS	C	A	A	A	B	B	E		E	F		E
Approach Vol, veh/h		1893			870			34			187	
Approach Delay, s/veh		10.2			10.8			74.2			68.9	
Approach LOS		B			B			E			E	

Timer	1	2	3	4	5	6	7	8
Assigned Phs		2		4	5	6		8
Phs Duration (G+Y+Rc), s		152.1		17.9	27.7	124.4		17.9
Change Period (Y+Rc), s		5.4		5.4	5.4	5.4		5.4
Max Green Setting (Gmax), s		137.6		21.6	75.6	56.6		21.6
Max Q Clear Time (g_c+I1), s		14.6		11.9	20.1	18.2		4.2
Green Ext Time (p_c), s		25.4		0.6	2.2	19.1		0.8

Intersection Summary	
HCM 2010 Ctrl Delay	14.8
HCM 2010 LOS	B

Movement	EBL	EBT	EBR	WBL	WBT	WBR	NBL	NBT	NBR	SBL	SBT	SBR
Lane Configurations												
Traffic Volume (veh/h)	665	304	181	164	255	31	410	2641	107	85	1295	261
Future Volume (veh/h)	665	304	181	164	255	31	410	2641	107	85	1295	261
Number	5	2	12	1	6	16	3	8	18	7	4	14
Initial Q (Qb), veh	0	0	0	0	0	0	0	0	0	0	0	0
Ped-Bike Adj(A_pbT)	1.00		1.00	1.00		1.00	1.00		1.00	1.00		1.00
Parking Bus, Adj	1.00	1.00	1.00	1.00	1.00	1.00	1.00	1.00	1.00	1.00	1.00	1.00
Adj Sat Flow, veh/h/ln	1863	1863	1863	1863	1863	1900	1863	1863	1900	1863	1863	1863
Adj Flow Rate, veh/h	764	330	0	189	331	55	466	2871	141	96	1408	311
Adj No. of Lanes	2	1	1	1	2	0	2	3	0	1	3	1
Peak Hour Factor	0.87	0.92	0.71	0.79	0.84	0.56	0.88	0.92	0.76	0.89	0.92	0.84
Percent Heavy Veh, %	2	2	2	2	2	2	2	2	2	2	2	2
Cap, veh/h	818	430	365	184	323	53	519	2532	122	95	1973	614
Arrive On Green	0.08	0.08	0.00	0.10	0.10	0.10	0.15	0.51	0.51	0.03	0.39	0.39
Sat Flow, veh/h	3548	1863	1583	1774	3122	513	3442	4970	240	1774	5085	1583
Grp Volume(v), veh/h	764	330	0	189	196	190	466	1944	1068	96	1408	311
Grp Sat Flow(s),veh/h/ln	1774	1863	1583	1774	1863	1772	1721	1695	1820	1774	1695	1583
Q Serve(g_s), s	36.4	29.6	0.0	17.6	17.6	17.6	22.6	86.6	86.6	5.0	39.8	25.4
Cycle Q Clear(g_c), s	36.4	29.6	0.0	17.6	17.6	17.6	22.6	86.6	86.6	5.0	39.8	25.4
Prop In Lane	1.00		1.00	1.00		0.29	1.00		0.13	1.00		1.00
Lane Grp Cap(c), veh/h	818	430	365	184	193	183	519	1727	927	95	1973	614
V/C Ratio(X)	0.93	0.77	0.00	1.03	1.02	1.04	0.90	1.13	1.15	1.02	0.71	0.51
Avail Cap(c_a), veh/h	818	430	365	184	193	183	640	1727	927	95	1973	614
HCM Platoon Ratio	0.33	0.33	0.33	1.00	1.00	1.00	1.00	1.00	1.00	1.00	1.00	1.00
Upstream Filter(I)	1.00	1.00	0.00	1.00	1.00	1.00	1.00	1.00	1.00	1.00	1.00	1.00
Uniform Delay (d), s/veh	77.2	74.1	0.0	76.2	76.2	76.2	70.9	41.7	41.7	47.2	44.0	39.6
Incr Delay (d2), s/veh	19.0	12.4	0.0	74.2	69.2	76.0	13.5	64.7	80.8	96.8	1.2	0.7
Initial Q Delay(d3),s/veh	0.0	0.0	0.0	0.2	0.1	0.2	0.0	0.0	0.0	0.1	0.0	0.0
%ile BackOfQ(50%),veh/ln	20.1	16.8	0.0	12.4	12.8	12.5	11.7	55.8	64.1	7.2	18.9	11.3
LnGrp Delay(d),s/veh	96.2	86.5	0.0	150.6	145.6	152.3	84.4	106.4	122.5	144.2	45.3	40.3
LnGrp LOS	F	F		F	F	F	F	F	F	F	D	D
Approach Vol, veh/h		1094			575			3478			1815	
Approach Delay, s/veh		93.3			149.5			108.4			49.7	
Approach LOS		F			F			F			D	

Timer	1	2	3	4	5	6	7	8
Assigned Phs		2	3	4		6	7	8
Phs Duration (G+Y+Rc), s		44.6	31.0	71.4		23.0	10.4	92.0
Change Period (Y+Rc), s		5.4	5.4	5.4		5.4	5.4	5.4
Max Green Setting (Gmax), s		39.2	31.6	60.0		17.6	5.0	86.6
Max Q Clear Time (g_c+I1), s		38.4	24.6	41.8		19.6	7.0	88.6
Green Ext Time (p_c), s		0.4	1.0	18.0		0.0	0.0	0.0

Intersection Summary	
HCM 2010 Ctrl Delay	94.1
HCM 2010 LOS	F

Notes

User approved volume balancing among the lanes for turning movement.

Movement	EBL	EBT	EBR	WBL	WBT	WBR	NBL	NBT	NBR	SBL	SBT	SBR
Lane Configurations												
Traffic Volume (veh/h)	132	468	28	10	363	59	38	104	11	38	44	32
Future Volume (veh/h)	132	468	28	10	363	59	38	104	11	38	44	32
Number	5	2	12	1	6	16	3	8	18	7	4	14
Initial Q (Qb), veh	0	0	0	0	0	0	0	0	0	0	0	0
Ped-Bike Adj(A_pbT)	1.00		1.00	1.00		1.00	1.00		1.00	1.00		1.00
Parking Bus, Adj	1.00	1.00	1.00	1.00	1.00	1.00	1.00	1.00	1.00	1.00	1.00	1.00
Adj Sat Flow, veh/h/ln	1863	1863	1900	1863	1863	1900	1863	1863	1900	1863	1863	1900
Adj Flow Rate, veh/h	171	585	33	12	412	80	56	137	20	44	60	48
Adj No. of Lanes	1	1	0	1	1	0	1	1	0	1	1	0
Peak Hour Factor	0.77	0.80	0.84	0.83	0.88	0.74	0.68	0.76	0.55	0.86	0.73	0.67
Percent Heavy Veh, %	2	2	2	2	2	2	2	2	2	2	2	2
Cap, veh/h	414	801	45	294	588	114	288	204	30	251	116	93
Arrive On Green	0.09	0.46	0.46	0.02	0.39	0.39	0.05	0.13	0.13	0.04	0.12	0.12
Sat Flow, veh/h	1774	1747	99	1774	1516	294	1774	1590	232	1774	960	768
Grp Volume(v), veh/h	171	0	618	12	0	492	56	0	157	44	0	108
Grp Sat Flow(s),veh/h/ln	1774	0	1845	1774	0	1811	1774	0	1822	1774	0	1727
Q Serve(g_s), s	3.3	0.0	16.6	0.2	0.0	13.9	1.6	0.0	5.0	1.3	0.0	3.6
Cycle Q Clear(g_c), s	3.3	0.0	16.6	0.2	0.0	13.9	1.6	0.0	5.0	1.3	0.0	3.6
Prop In Lane	1.00		0.05	1.00		0.16	1.00		0.13	1.00		0.44
Lane Grp Cap(c), veh/h	414	0	846	294	0	703	288	0	234	251	0	209
V/C Ratio(X)	0.41	0.00	0.73	0.04	0.00	0.70	0.19	0.00	0.67	0.17	0.00	0.52
Avail Cap(c_a), veh/h	560	0	1316	419	0	1143	362	0	437	327	0	403
HCM Platoon Ratio	1.00	1.00	1.00	1.00	1.00	1.00	1.00	1.00	1.00	1.00	1.00	1.00
Upstream Filter(I)	1.00	0.00	1.00	1.00	0.00	1.00	1.00	0.00	1.00	1.00	0.00	1.00
Uniform Delay (d), s/veh	11.0	0.0	13.4	12.2	0.0	15.6	21.7	0.0	25.3	22.0	0.0	25.1
Incr Delay (d2), s/veh	0.7	0.0	1.2	0.1	0.0	1.3	0.3	0.0	3.3	0.3	0.0	2.0
Initial Q Delay(d3),s/veh	0.0	0.0	0.0	0.0	0.0	0.0	0.0	0.0	0.0	0.0	0.0	0.0
%ile BackOfQ(50%),veh/ln	1.6	0.0	8.7	0.1	0.0	7.1	0.8	0.0	2.7	0.6	0.0	1.8
LnGrp Delay(d),s/veh	11.7	0.0	14.7	12.2	0.0	16.9	22.0	0.0	28.6	22.3	0.0	27.0
LnGrp LOS	B		B	B		B	C		C	C		C
Approach Vol, veh/h		789			504			213			152	
Approach Delay, s/veh		14.0			16.8			26.9			25.6	
Approach LOS		B			B			C			C	

Timer	1	2	3	4	5	6	7	8
Assigned Phs	1	2	3	4	5	6	7	8
Phs Duration (G+Y+Rc), s	6.3	33.3	8.5	12.8	10.6	29.0	8.0	13.2
Change Period (Y+Rc), s	5.4	5.4	5.4	5.4	5.4	5.4	5.4	5.4
Max Green Setting (Gmax), s	5.2	43.4	5.6	14.2	10.2	38.4	5.2	14.6
Max Q Clear Time (g_c+I1), s	2.2	18.6	3.6	5.6	5.3	15.9	3.3	7.0
Green Ext Time (p_c), s	0.0	8.0	0.0	0.9	0.2	7.7	0.0	0.8

Intersection Summary	
HCM 2010 Ctrl Delay	17.6
HCM 2010 LOS	B

Movement	EBL	EBT	EBR	WBL	WBT	WBR	NBL	NBT	NBR	SBL	SBT	SBR
Lane Configurations												
Traffic Volume (veh/h)	126	362	57	54	206	19	85	443	72	35	231	46
Future Volume (veh/h)	126	362	57	54	206	19	85	443	72	35	231	46
Number	5	2	12	1	6	16	3	8	18	7	4	14
Initial Q (Qb), veh	0	0	0	0	0	0	0	0	0	0	0	0
Ped-Bike Adj(A_pbT)	1.00		1.00	1.00		1.00	1.00		1.00	1.00		1.00
Parking Bus, Adj	1.00	1.00	1.00	1.00	1.00	1.00	1.00	1.00	1.00	1.00	1.00	1.00
Adj Sat Flow, veh/h/ln	1863	1863	1900	1863	1863	1900	1863	1863	1900	1863	1863	1900
Adj Flow Rate, veh/h	183	398	90	72	219	42	157	482	114	44	260	78
Adj No. of Lanes	1	1	0	1	1	0	1	1	0	1	1	0
Peak Hour Factor	0.69	0.91	0.63	0.75	0.94	0.45	0.54	0.92	0.63	0.80	0.89	0.59
Percent Heavy Veh, %	2	2	2	2	2	2	2	2	2	2	2	2
Cap, veh/h	399	444	100	210	385	74	387	517	122	183	430	129
Arrive On Green	0.10	0.30	0.30	0.05	0.25	0.25	0.08	0.36	0.36	0.04	0.31	0.31
Sat Flow, veh/h	1774	1471	333	1774	1520	291	1774	1457	345	1774	1377	413
Grp Volume(v), veh/h	183	0	488	72	0	261	157	0	596	44	0	338
Grp Sat Flow(s),veh/h/ln	1774	0	1804	1774	0	1811	1774	0	1802	1774	0	1790
Q Serve(g_s), s	6.2	0.0	21.8	2.5	0.0	10.6	4.9	0.0	26.8	1.4	0.0	13.5
Cycle Q Clear(g_c), s	6.2	0.0	21.8	2.5	0.0	10.6	4.9	0.0	26.8	1.4	0.0	13.5
Prop In Lane	1.00		0.18	1.00		0.16	1.00		0.19	1.00		0.23
Lane Grp Cap(c), veh/h	399	0	544	210	0	459	387	0	640	183	0	559
V/C Ratio(X)	0.46	0.00	0.90	0.34	0.00	0.57	0.41	0.00	0.93	0.24	0.00	0.60
Avail Cap(c_a), veh/h	409	0	590	234	0	519	421	0	655	223	0	581
HCM Platoon Ratio	1.00	1.00	1.00	1.00	1.00	1.00	1.00	1.00	1.00	1.00	1.00	1.00
Upstream Filter(I)	1.00	0.00	1.00	1.00	0.00	1.00	1.00	0.00	1.00	1.00	0.00	1.00
Uniform Delay (d), s/veh	20.2	0.0	28.1	23.4	0.0	27.4	18.2	0.0	26.1	21.6	0.0	24.5
Incr Delay (d2), s/veh	0.8	0.0	15.7	1.0	0.0	1.1	0.7	0.0	20.0	0.7	0.0	1.7
Initial Q Delay(d3),s/veh	0.0	0.0	0.0	0.0	0.0	0.0	0.0	0.0	0.0	0.0	0.0	0.0
%ile BackOfQ(50%),veh/ln	3.1	0.0	13.2	1.3	0.0	5.4	2.5	0.0	16.8	0.7	0.0	6.9
LnGrp Delay(d),s/veh	21.1	0.0	43.8	24.4	0.0	28.5	18.9	0.0	46.1	22.3	0.0	26.2
LnGrp LOS	C		D	C		C	B		D	C		C
Approach Vol, veh/h		671			333			753			382	
Approach Delay, s/veh		37.6			27.6			40.4			25.8	
Approach LOS		D			C			D			C	

Timer	1	2	3	4	5	6	7	8
Assigned Phs	1	2	3	4	5	6	7	8
Phs Duration (G+Y+Rc), s	9.5	30.8	12.2	31.7	13.5	26.7	8.6	35.3
Change Period (Y+Rc), s	5.4	5.4	5.4	5.4	5.4	5.4	5.4	5.4
Max Green Setting (Gmax), s	5.2	27.5	8.4	27.3	8.6	24.1	5.1	30.6
Max Q Clear Time (g_c+I1), s	4.5	23.8	6.9	15.5	8.2	12.6	3.4	28.8
Green Ext Time (p_c), s	0.0	1.6	0.1	4.9	0.0	3.6	0.0	1.0

Intersection Summary	
HCM 2010 Ctrl Delay	34.9
HCM 2010 LOS	C

Movement	EBL	EBT	EBR	WBL	WBT	WBR	NBL	NBT	NBR	SBL	SBT	SBR
Lane Configurations												
Traffic Volume (veh/h)	391	185	13	1	134	156	29	59	8	79	28	62
Future Volume (veh/h)	391	185	13	1	134	156	29	59	8	79	28	62
Number	5	2	12	1	6	16	3	8	18	7	4	14
Initial Q (Qb), veh	0	0	0	0	0	0	0	0	0	0	0	0
Ped-Bike Adj(A_pbT)	1.00		1.00	1.00		1.00	1.00		1.00	1.00		1.00
Parking Bus, Adj	1.00	1.00	1.00	1.00	1.00	1.00	1.00	1.00	1.00	1.00	1.00	1.00
Adj Sat Flow, veh/h/ln	1863	1863	1900	1863	1863	1900	1863	1863	1900	1863	1863	1863
Adj Flow Rate, veh/h	483	240	28	4	144	205	44	72	16	90	44	95
Adj No. of Lanes	1	1	0	1	1	0	1	1	0	1	1	1
Peak Hour Factor	0.81	0.77	0.46	0.25	0.93	0.76	0.66	0.82	0.50	0.88	0.64	0.65
Percent Heavy Veh, %	2	2	2	2	2	2	2	2	2	2	2	2
Cap, veh/h	704	1066	124	782	453	646	298	232	51	276	292	248
Arrive On Green	0.65	0.65	0.65	0.65	0.65	0.65	0.16	0.16	0.16	0.16	0.16	0.16
Sat Flow, veh/h	1028	1638	191	1107	696	991	1245	1477	328	1304	1863	1583
Grp Volume(v), veh/h	483	0	268	4	0	349	44	0	88	90	44	95
Grp Sat Flow(s),veh/h/ln	1028	0	1829	1107	0	1688	1245	0	1805	1304	1863	1583
Q Serve(g_s), s	21.9	0.0	3.4	0.1	0.0	5.1	1.8	0.0	2.4	3.7	1.1	3.0
Cycle Q Clear(g_c), s	27.0	0.0	3.4	3.4	0.0	5.1	2.9	0.0	2.4	6.1	1.1	3.0
Prop In Lane	1.00		0.10	1.00		0.59	1.00		0.18	1.00		1.00
Lane Grp Cap(c), veh/h	704	0	1191	782	0	1099	298	0	283	276	292	248
V/C Ratio(X)	0.69	0.00	0.23	0.01	0.00	0.32	0.15	0.00	0.31	0.33	0.15	0.38
Avail Cap(c_a), veh/h	1234	0	2134	1353	0	1969	404	0	437	387	451	383
HCM Platoon Ratio	1.00	1.00	1.00	1.00	1.00	1.00	1.00	1.00	1.00	1.00	1.00	1.00
Upstream Filter(I)	1.00	0.00	1.00	1.00	0.00	1.00	1.00	0.00	1.00	1.00	1.00	1.00
Uniform Delay (d), s/veh	10.3	0.0	4.0	4.7	0.0	4.3	21.7	0.0	21.0	23.7	20.5	21.3
Incr Delay (d2), s/veh	1.2	0.0	0.1	0.0	0.0	0.2	0.2	0.0	0.6	0.7	0.2	1.0
Initial Q Delay(d3),s/veh	0.0	0.0	0.0	0.0	0.0	0.0	0.0	0.0	0.0	0.0	0.0	0.0
%ile BackOfQ(50%),veh/ln	6.3	0.0	1.7	0.0	0.0	2.4	0.6	0.0	1.2	1.4	0.6	1.4
LnGrp Delay(d),s/veh	11.5	0.0	4.1	4.7	0.0	4.5	22.0	0.0	21.6	24.4	20.7	22.2
LnGrp LOS	B		A	A		A	C		C	C	C	C
Approach Vol, veh/h		751			353			132			229	
Approach Delay, s/veh		8.8			4.5			21.7			22.8	
Approach LOS		A			A			C			C	

Timer	1	2	3	4	5	6	7	8
Assigned Phs		2		4		6		8
Phs Duration (G+Y+Rc), s		42.0		14.2		42.0		14.2
Change Period (Y+Rc), s		5.4		5.4		5.4		5.4
Max Green Setting (Gmax), s		65.6		13.6		65.6		13.6
Max Q Clear Time (g_c+I1), s		29.0		8.1		7.1		4.9
Green Ext Time (p_c), s		7.6		0.7		7.9		1.0

Intersection Summary	
HCM 2010 Ctrl Delay	11.1
HCM 2010 LOS	B

Movement	EBL	EBT	EBR	WBL	WBT	WBR	NBL	NBT	NBR	SBL	SBT	SBR
Lane Configurations												
Traffic Volume (veh/h)	86	71	117	57	55	11	129	833	80	16	311	40
Future Volume (veh/h)	86	71	117	57	55	11	129	833	80	16	311	40
Number	5	2	12	1	6	16	3	8	18	7	4	14
Initial Q (Qb), veh	0	0	0	0	0	0	0	0	0	0	0	0
Ped-Bike Adj(A_pbT)	1.00		1.00	1.00		1.00	1.00		1.00	1.00		1.00
Parking Bus, Adj	1.00	1.00	1.00	1.00	1.00	1.00	1.00	1.00	1.00	1.00	1.00	1.00
Adj Sat Flow, veh/h/ln	1863	1863	1900	1863	1863	1900	1863	1863	1900	1863	1863	1900
Adj Flow Rate, veh/h	126	113	167	102	100	20	150	905	123	30	349	60
Adj No. of Lanes	1	1	0	1	1	0	1	1	0	1	1	0
Peak Hour Factor	0.68	0.63	0.70	0.56	0.55	0.55	0.86	0.92	0.65	0.54	0.89	0.67
Percent Heavy Veh, %	2	2	2	2	2	2	2	2	2	2	2	2
Cap, veh/h	284	110	162	155	243	49	552	901	123	115	825	142
Arrive On Green	0.05	0.16	0.16	0.05	0.16	0.16	0.06	0.56	0.56	0.03	0.53	0.53
Sat Flow, veh/h	1774	680	1005	1774	1508	302	1774	1606	218	1774	1549	266
Grp Volume(v), veh/h	126	0	280	102	0	120	150	0	1028	30	0	409
Grp Sat Flow(s),veh/h/ln	1774	0	1685	1774	0	1810	1774	0	1824	1774	0	1816
Q Serve(g_s), s	5.4	0.0	17.4	5.2	0.0	6.4	4.1	0.0	60.6	0.8	0.0	14.7
Cycle Q Clear(g_c), s	5.4	0.0	17.4	5.2	0.0	6.4	4.1	0.0	60.6	0.8	0.0	14.7
Prop In Lane	1.00		0.60	1.00		0.17	1.00		0.12	1.00		0.15
Lane Grp Cap(c), veh/h	284	0	272	155	0	292	552	0	1024	115	0	967
V/C Ratio(X)	0.44	0.00	1.03	0.66	0.00	0.41	0.27	0.00	1.00	0.26	0.00	0.42
Avail Cap(c_a), veh/h	284	0	272	155	0	292	568	0	1024	149	0	986
HCM Platoon Ratio	1.00	1.00	1.00	1.00	1.00	1.00	1.00	1.00	1.00	1.00	1.00	1.00
Upstream Filter(I)	1.00	0.00	1.00	1.00	0.00	1.00	1.00	0.00	1.00	1.00	0.00	1.00
Uniform Delay (d), s/veh	37.4	0.0	45.3	37.0	0.0	40.7	11.2	0.0	23.7	25.9	0.0	15.2
Incr Delay (d2), s/veh	1.1	0.0	62.8	9.6	0.0	0.9	0.3	0.0	29.1	1.2	0.0	0.3
Initial Q Delay(d3),s/veh	0.0	0.0	0.0	0.0	0.0	0.0	0.0	0.0	0.0	0.0	0.0	0.0
%ile BackOfQ(50%),veh/ln	0.9	0.0	12.8	2.9	0.0	3.3	2.0	0.0	38.4	0.5	0.0	7.4
LnGrp Delay(d),s/veh	38.5	0.0	108.1	46.6	0.0	41.6	11.4	0.0	52.8	27.1	0.0	15.5
LnGrp LOS	D		F	D		D	B		F	C		B
Approach Vol, veh/h		406			222			1178			439	
Approach Delay, s/veh		86.5			43.9			47.5			16.3	
Approach LOS		F			D			D			B	

Timer	1	2	3	4	5	6	7	8
Assigned Phs	1	2	3	4	5	6	7	8
Phs Duration (G+Y+Rc), s	10.8	22.8	11.5	62.9	10.8	22.8	8.4	66.0
Change Period (Y+Rc), s	5.4	5.4	5.4	5.4	5.4	5.4	5.4	5.4
Max Green Setting (Gmax), s	5.4	17.4	7.0	58.6	5.4	17.4	5.0	60.6
Max Q Clear Time (g_c+I1), s	7.2	19.4	6.1	16.7	7.4	8.4	2.8	62.6
Green Ext Time (p_c), s	0.0	0.0	0.0	16.6	0.0	1.6	0.0	0.0

Intersection Summary	
HCM 2010 Ctrl Delay	48.1
HCM 2010 LOS	D

Movement	EBL	EBT	EBR	WBL	WBT	WBR	NBL	NBT	NBR	SBL	SBT	SBR
Lane Configurations												
Traffic Volume (veh/h)	110	1630	70	30	770	60	0	0	110	40	30	40
Future Volume (veh/h)	110	1630	70	30	770	60	0	0	110	40	30	40
Number	5	2	12	1	6	16	3	8	18	7	4	14
Initial Q (Qb), veh	0	0	0	0	0	0	0	0	0	0	0	0
Ped-Bike Adj(A_pbT)	1.00		1.00	1.00		1.00	1.00		1.00	1.00		1.00
Parking Bus, Adj	1.00	1.00	1.00	1.00	1.00	1.00	1.00	1.00	1.00	1.00	1.00	1.00
Adj Sat Flow, veh/h/ln	1863	1863	1900	1863	1863	1900	0	1863	1900	1900	1863	1863
Adj Flow Rate, veh/h	120	1772	76	33	837	65	0	0	120	43	33	43
Adj No. of Lanes	1	2	0	1	2	0	0	1	0	0	1	1
Peak Hour Factor	0.92	0.92	0.92	0.92	0.92	0.92	0.92	0.92	0.92	0.92	0.92	0.92
Percent Heavy Veh, %	2	2	2	2	2	2	0	2	2	2	2	2
Cap, veh/h	503	2802	119	229	2493	194	0	0	200	79	52	200
Arrive On Green	0.06	1.00	1.00	0.75	0.75	0.75	0.00	0.00	0.13	0.13	0.13	0.13
Sat Flow, veh/h	1774	3459	147	249	3328	258	0	0	1583	360	409	1583
Grp Volume(v), veh/h	120	902	946	33	445	457	0	0	120	76	0	43
Grp Sat Flow(s),veh/h/ln	1774	1770	1837	249	1770	1817	0	0	1583	770	0	1583
Q Serve(g_s), s	2.7	0.0	0.0	6.5	14.3	14.3	0.0	0.0	12.2	6.7	0.0	4.1
Cycle Q Clear(g_c), s	2.7	0.0	0.0	6.5	14.3	14.3	0.0	0.0	12.2	18.9	0.0	4.1
Prop In Lane	1.00		0.08	1.00		0.14	0.00		1.00	0.57		1.00
Lane Grp Cap(c), veh/h	503	1434	1488	229	1326	1361	0	0	200	130	0	200
V/C Ratio(X)	0.24	0.63	0.64	0.14	0.34	0.34	0.00	0.00	0.60	0.58	0.00	0.22
Avail Cap(c_a), veh/h	583	1434	1488	229	1326	1361	0	0	248	175	0	248
HCM Platoon Ratio	2.00	2.00	2.00	1.00	1.00	1.00	1.00	1.00	1.00	1.00	1.00	1.00
Upstream Filter(I)	0.55	0.55	0.55	0.88	0.88	0.88	0.00	0.00	1.00	1.00	0.00	1.00
Uniform Delay (d), s/veh	4.8	0.0	0.0	6.2	7.1	7.1	0.0	0.0	70.2	75.9	0.0	66.7
Incr Delay (d2), s/veh	0.1	1.2	1.2	1.2	0.6	0.6	0.0	0.0	2.9	4.1	0.0	0.5
Initial Q Delay(d3),s/veh	0.0	0.0	0.0	0.0	0.0	0.0	0.0	0.0	0.0	0.0	0.0	0.0
%ile BackOfQ(50%),veh/ln	1.3	0.5	0.5	0.5	7.1	7.3	0.0	0.0	5.5	3.7	0.0	3.8
LnGrp Delay(d),s/veh	5.0	1.2	1.2	7.3	7.8	7.7	0.0	0.0	73.1	80.0	0.0	67.2
LnGrp LOS	A	A	A	A	A	A			E	E		E
Approach Vol, veh/h		1968			935			120			119	
Approach Delay, s/veh		1.4			7.7			73.1			75.4	
Approach LOS		A			A			E			E	

Timer	1	2	3	4	5	6	7	8
Assigned Phs		2		4	5	6		8
Phs Duration (G+Y+Rc), s		143.1		26.9	10.4	132.7		26.9
Change Period (Y+Rc), s		5.4		5.4	5.4	5.4		5.4
Max Green Setting (Gmax), s		132.6		26.6	12.6	114.6		26.6
Max Q Clear Time (g_c+I1), s		2.0		20.9	4.7	16.3		14.2
Green Ext Time (p_c), s		58.9		0.6	0.2	52.4		1.0

Intersection Summary	
HCM 2010 Ctrl Delay	8.8
HCM 2010 LOS	A

Movement	EBL	EBT	EBR	WBL	WBT	WBR	NBL	NBT	NBR	SBL	SBT	SBR
Lane Configurations												
Traffic Volume (veh/h)	130	1450	130	10	750	50	160	50	240	120	20	80
Future Volume (veh/h)	130	1450	130	10	750	50	160	50	240	120	20	80
Number	5	2	12	1	6	16	3	8	18	7	4	14
Initial Q (Qb), veh	0	0	0	0	0	0	0	0	0	0	0	0
Ped-Bike Adj(A_pbT)	1.00		1.00	1.00		1.00	1.00		1.00	1.00		1.00
Parking Bus, Adj	1.00	1.00	1.00	1.00	1.00	1.00	1.00	1.00	1.00	1.00	1.00	1.00
Adj Sat Flow, veh/h/ln	1863	1863	1900	1863	1863	1900	1863	1863	1863	1863	1863	1863
Adj Flow Rate, veh/h	141	1576	141	11	815	54	174	54	261	130	22	87
Adj No. of Lanes	1	2	0	1	2	0	1	1	1	1	1	1
Peak Hour Factor	0.92	0.92	0.92	0.92	0.92	0.92	0.92	0.92	0.92	0.92	0.92	0.92
Percent Heavy Veh, %	2	2	2	2	2	2	2	2	2	2	2	2
Cap, veh/h	488	2373	210	261	2349	156	258	108	110	219	64	111
Arrive On Green	0.07	1.00	1.00	0.01	0.70	0.70	0.11	0.06	0.06	0.08	0.03	0.03
Sat Flow, veh/h	1774	3289	292	1774	3370	223	1774	1863	1583	1774	1863	1583
Grp Volume(v), veh/h	141	842	875	11	428	441	174	54	261	130	22	87
Grp Sat Flow(s),veh/h/ln	1774	1770	1811	1774	1770	1823	1774	1863	1583	1774	1863	1583
Q Serve(g_s), s	4.1	0.0	0.0	0.3	16.4	16.4	15.8	4.8	9.8	11.9	2.0	5.8
Cycle Q Clear(g_c), s	4.1	0.0	0.0	0.3	16.4	16.4	15.8	4.8	9.8	11.9	2.0	5.8
Prop In Lane	1.00		0.16	1.00		0.12	1.00		1.00	1.00		1.00
Lane Grp Cap(c), veh/h	488	1277	1307	261	1234	1271	258	108	110	219	64	111
V/C Ratio(X)	0.29	0.66	0.67	0.04	0.35	0.35	0.67	0.50	2.37	0.59	0.35	0.78
Avail Cap(c_a), veh/h	530	1277	1307	496	1234	1271	276	108	110	237	64	111
HCM Platoon Ratio	2.00	2.00	2.00	1.00	1.00	1.00	1.00	1.00	1.00	1.00	1.00	1.00
Upstream Filter(I)	0.76	0.76	0.76	0.95	0.95	0.95	1.00	1.00	1.00	1.00	1.00	1.00
Uniform Delay (d), s/veh	7.2	0.0	0.0	7.2	10.3	10.3	69.2	77.7	79.1	71.7	80.2	77.7
Incr Delay (d2), s/veh	0.2	2.0	2.1	0.1	0.7	0.7	5.8	3.7	642.4	3.5	3.2	29.2
Initial Q Delay(d3),s/veh	0.0	0.0	0.0	0.0	0.0	0.0	0.0	0.0	0.0	0.0	0.0	0.0
%ile BackOfQ(50%),veh/ln	1.9	0.7	0.8	0.2	8.2	8.5	8.2	2.6	24.9	6.0	1.1	4.9
LnGrp Delay(d),s/veh	7.4	2.0	2.1	7.3	11.0	11.0	75.1	81.4	721.4	75.2	83.5	106.9
LnGrp LOS	A	A	A	A	B	B	E	F	F	E	F	F
Approach Vol, veh/h		1858			880			489			239	
Approach Delay, s/veh		2.5			11.0			420.8			87.5	
Approach LOS		A			B			F			F	

Timer	1	2	3	4	5	6	7	8
Assigned Phs	1	2	3	4	5	6	7	8
Phs Duration (G+Y+Rc), s	7.4	128.1	23.3	11.2	11.6	123.9	19.3	15.2
Change Period (Y+Rc), s	5.4	5.4	5.4	5.4	5.4	5.4	5.4	5.4
Max Green Setting (Gmax), s	24.6	98.4	19.6	5.8	10.2	112.8	15.6	9.8
Max Q Clear Time (g_c+I1), s	2.3	2.0	17.8	7.8	6.1	18.4	13.9	11.8
Green Ext Time (p_c), s	0.0	41.3	0.1	0.0	0.1	41.0	0.0	0.0

Intersection Summary	
HCM 2010 Ctrl Delay	69.5
HCM 2010 LOS	E

Movement	EBL	EBT	WBT	WBR	SBL	SBR
Lane Configurations						
Traffic Volume (veh/h)	140	2610	2170	240	340	20
Future Volume (veh/h)	140	2610	2170	240	340	20
Number	5	2	6	16	7	14
Initial Q (Qb), veh	0	0	0	0	0	0
Ped-Bike Adj(A_pbT)	1.00			1.00	1.00	1.00
Parking Bus, Adj	1.00	1.00	1.00	1.00	1.00	1.00
Adj Sat Flow, veh/h/ln	1863	1863	1863	1900	1863	1863
Adj Flow Rate, veh/h	152	2837	2359	261	370	22
Adj No. of Lanes	1	3	3	0	2	1
Peak Hour Factor	0.92	0.92	0.92	0.92	0.92	0.92
Percent Heavy Veh, %	2	2	2	2	2	2
Cap, veh/h	172	4141	3446	373	421	194
Arrive On Green	0.09	1.00	0.74	0.74	0.12	0.12
Sat Flow, veh/h	1774	5253	4827	504	3442	1583
Grp Volume(v), veh/h	152	2837	1702	918	370	22
Grp Sat Flow(s),veh/h/ln	1774	1695	1695	1774	1721	1583
Q Serve(g_s), s	5.0	0.0	44.6	47.5	18.0	2.1
Cycle Q Clear(g_c), s	5.0	0.0	44.6	47.5	18.0	2.1
Prop In Lane	1.00			0.28	1.00	1.00
Lane Grp Cap(c), veh/h	172	4141	2507	1312	421	194
V/C Ratio(X)	0.88	0.69	0.68	0.70	0.88	0.11
Avail Cap(c_a), veh/h	313	4141	2507	1312	539	248
HCM Platoon Ratio	2.00	2.00	1.00	1.00	1.00	1.00
Upstream Filter(I)	0.64	0.64	1.00	1.00	1.00	1.00
Uniform Delay (d), s/veh	39.3	0.0	11.6	12.0	73.4	66.4
Incr Delay (d2), s/veh	9.4	0.6	1.5	3.1	12.8	0.3
Initial Q Delay(d3),s/veh	0.0	0.0	0.0	0.0	0.0	0.0
%ile BackOfQ(50%),veh/ln	7.4	0.2	21.1	24.1	9.3	2.0
LnGrp Delay(d),s/veh	48.7	0.6	13.1	15.1	86.2	66.7
LnGrp LOS	D	A	B	B	F	E
Approach Vol, veh/h		2989	2620		392	
Approach Delay, s/veh		3.0	13.8		85.1	
Approach LOS		A	B		F	

Timer	1	2	3	4	5	6	7	8
Assigned Phs		2		4	5	6		
Phs Duration (G+Y+Rc), s		143.8		26.2	12.7	131.1		
Change Period (Y+Rc), s		5.4		5.4	5.4	5.4		
Max Green Setting (Gmax), s		132.6		26.6	20.8	106.4		
Max Q Clear Time (g_c+I1), s		2.0		20.0	7.0	49.5		
Green Ext Time (p_c), s		128.2		0.8	0.3	56.4		

Intersection Summary	
HCM 2010 Ctrl Delay	13.1
HCM 2010 LOS	B

Movement	EBT	EBR	WBL	WBT	NBL	NBR
Lane Configurations						
Traffic Volume (veh/h)	2510	130	110	2120	10	110
Future Volume (veh/h)	2510	130	110	2120	10	110
Number	2	12	1	6	3	18
Initial Q (Qb), veh	0	0	0	0	0	0
Ped-Bike Adj(A_pbT)		1.00	1.00		1.00	1.00
Parking Bus, Adj	1.00	1.00	1.00	1.00	1.00	1.00
Adj Sat Flow, veh/h/ln	1863	1900	1863	1863	1863	1863
Adj Flow Rate, veh/h	2728	141	120	2304	11	120
Adj No. of Lanes	3	0	1	3	1	2
Peak Hour Factor	0.92	0.92	0.92	0.92	0.92	0.92
Percent Heavy Veh, %	2	2	2	2	2	2
Cap, veh/h	4069	207	168	4485	97	152
Arrive On Green	1.00	1.00	0.03	0.88	0.05	0.05
Sat Flow, veh/h	5124	252	1774	5253	1774	2787
Grp Volume(v), veh/h	1853	1016	120	2304	11	120
Grp Sat Flow(s),veh/h/ln	1695	1818	1774	1695	1774	1393
Q Serve(g_s), s	0.0	0.0	1.7	16.6	1.0	7.2
Cycle Q Clear(g_c), s	0.0	0.0	1.7	16.6	1.0	7.2
Prop In Lane		0.14	1.00		1.00	1.00
Lane Grp Cap(c), veh/h	2783	1493	168	4485	97	152
V/C Ratio(X)	0.67	0.68	0.71	0.51	0.11	0.79
Avail Cap(c_a), veh/h	2783	1493	321	4485	111	174
HCM Platoon Ratio	2.00	2.00	1.00	1.00	1.00	1.00
Upstream Filter(I)	0.39	0.39	0.56	0.56	1.00	1.00
Uniform Delay (d), s/veh	0.0	0.0	17.6	2.2	76.5	79.4
Incr Delay (d2), s/veh	0.5	1.0	3.2	0.2	0.5	19.1
Initial Q Delay(d3),s/veh	0.0	0.0	0.0	0.0	0.0	0.0
%ile BackOfQ(50%),veh/ln	0.2	0.4	4.8	7.6	0.5	3.2
LnGrp Delay(d),s/veh	0.5	1.0	20.8	2.4	77.0	98.5
LnGrp LOS	A	A	C	A	E	F
Approach Vol, veh/h	2869			2424	131	
Approach Delay, s/veh	0.7			3.3	96.7	
Approach LOS	A			A	F	

Timer	1	2	3	4	5	6	7	8
Assigned Phs	1	2				6		8
Phs Duration (G+Y+Rc), s	10.4	145.0				155.3		14.7
Change Period (Y+Rc), s	5.4	5.4				5.4		5.4
Max Green Setting (Gmax), s	19.6	123.6				148.6		10.6
Max Q Clear Time (g_c+I1), s	3.7	2.0				18.6		9.2
Green Ext Time (p_c), s	0.2	118.1				126.0		0.0

Intersection Summary	
HCM 2010 Ctrl Delay	4.2
HCM 2010 LOS	A

HCM 2010 analysis supports speed limit in the range of 25 and 55 mph

Movement	EBL	EBT	WBT	WBR	SBL	SBR
Lane Configurations						
Traffic Volume (veh/h)	110	2050	1680	90	110	10
Future Volume (veh/h)	110	2050	1680	90	110	10
Number	5	2	6	16	7	14
Initial Q (Qb), veh	0	0	0	0	0	0
Ped-Bike Adj(A_pbT)	1.00			1.00	1.00	1.00
Parking Bus, Adj	1.00	1.00	1.00	1.00	1.00	1.00
Adj Sat Flow, veh/h/ln	1863	1863	1863	1900	1863	1863
Adj Flow Rate, veh/h	120	2228	1826	98	120	11
Adj No. of Lanes	1	3	3	0	1	1
Peak Hour Factor	0.92	0.92	0.92	0.92	0.92	0.92
Percent Heavy Veh, %	2	2	2	2	2	2
Cap, veh/h	250	4356	3931	211	142	127
Arrive On Green	0.03	0.86	0.80	0.80	0.08	0.08
Sat Flow, veh/h	1774	5253	5109	265	1774	1583
Grp Volume(v), veh/h	120	2228	1252	672	120	11
Grp Sat Flow(s),veh/h/ln	1774	1695	1695	1816	1774	1583
Q Serve(g_s), s	2.0	19.0	20.4	20.4	11.3	1.1
Cycle Q Clear(g_c), s	2.0	19.0	20.4	20.4	11.3	1.1
Prop In Lane	1.00			0.15	1.00	1.00
Lane Grp Cap(c), veh/h	250	4356	2697	1445	142	127
V/C Ratio(X)	0.48	0.51	0.46	0.47	0.85	0.09
Avail Cap(c_a), veh/h	424	4356	2697	1445	288	257
HCM Platoon Ratio	1.00	1.00	1.00	1.00	1.00	1.00
Upstream Filter(I)	1.00	1.00	0.83	0.83	1.00	1.00
Uniform Delay (d), s/veh	5.5	3.1	5.6	5.6	77.2	72.5
Incr Delay (d2), s/veh	1.4	0.4	0.1	0.2	12.8	0.3
Initial Q Delay(d3),s/veh	0.0	0.0	0.0	0.0	0.0	0.0
%ile BackOfQ(50%),veh/ln	1.6	8.8	9.4	10.2	6.1	1.0
LnGrp Delay(d),s/veh	6.9	3.5	5.7	5.8	89.9	72.8
LnGrp LOS	A	A	A	A	F	E
Approach Vol, veh/h		2348	1924		131	
Approach Delay, s/veh		3.7	5.8		88.5	
Approach LOS		A	A		F	

Timer	1	2	3	4	5	6	7	8
Assigned Phs		2		4	5	6		
Phs Duration (G+Y+Rc), s		151.0		19.0	10.4	140.6		
Change Period (Y+Rc), s		5.4		5.4	5.4	5.4		
Max Green Setting (Gmax), s		131.6		27.6	21.6	104.6		
Max Q Clear Time (g_c+I1), s		21.0		13.3	4.0	22.4		
Green Ext Time (p_c), s		96.7		0.3	0.2	74.3		

Intersection Summary	
HCM 2010 Ctrl Delay	7.1
HCM 2010 LOS	A

Movement	EBL	EBT	EBR	WBL	WBT	WBR	NBL	NBT	NBR	SBL	SBT	SBR
Lane Configurations												
Traffic Volume (veh/h)	40	1450	40	20	820	20	20	0	100	90	0	40
Future Volume (veh/h)	40	1450	40	20	820	20	20	0	100	90	0	40
Number	5	2	12	1	6	16	3	8	18	7	4	14
Initial Q (Qb), veh	0	0	0	0	0	0	0	0	0	0	0	0
Ped-Bike Adj(A_pbT)	1.00		1.00	1.00		1.00	1.00		1.00	1.00		1.00
Parking Bus, Adj	1.00	1.00	1.00	1.00	1.00	1.00	1.00	1.00	1.00	1.00	1.00	1.00
Adj Sat Flow, veh/h/ln	1863	1863	1900	1863	1863	1900	1900	1863	1900	1900	1863	1863
Adj Flow Rate, veh/h	43	1576	43	22	891	22	22	0	109	98	0	43
Adj No. of Lanes	1	2	0	1	2	0	0	2	0	0	1	1
Peak Hour Factor	0.92	0.92	0.92	0.92	0.92	0.92	0.92	0.92	0.92	0.92	0.92	0.92
Percent Heavy Veh, %	2	2	2	2	2	2	2	2	2	2	2	2
Cap, veh/h	459	2515	68	296	2499	62	82	0	247	175	0	271
Arrive On Green	0.05	1.00	1.00	0.02	0.71	0.71	0.17	0.00	0.17	0.17	0.00	0.17
Sat Flow, veh/h	1774	3520	96	1774	3530	87	231	0	1441	773	0	1583
Grp Volume(v), veh/h	43	791	828	22	447	466	22	0	109	98	0	43
Grp Sat Flow(s),veh/h/ln	1774	1770	1846	1774	1770	1847	231	0	1441	773	0	1583
Q Serve(g_s), s	1.1	0.0	0.0	0.6	16.8	16.8	2.7	0.0	11.5	12.6	0.0	3.9
Cycle Q Clear(g_c), s	1.1	0.0	0.0	0.6	16.8	16.8	26.9	0.0	11.5	24.2	0.0	3.9
Prop In Lane	1.00		0.05	1.00		0.05	1.00		1.00	1.00		1.00
Lane Grp Cap(c), veh/h	459	1264	1319	296	1253	1308	82	0	247	175	0	271
V/C Ratio(X)	0.09	0.63	0.63	0.07	0.36	0.36	0.27	0.00	0.44	0.56	0.00	0.16
Avail Cap(c_a), veh/h	482	1264	1319	331	1253	1308	94	0	259	186	0	285
HCM Platoon Ratio	2.00	2.00	2.00	1.00	1.00	1.00	1.00	1.00	1.00	1.00	1.00	1.00
Upstream Filter(I)	0.72	0.72	0.72	0.33	0.33	0.33	1.00	0.00	1.00	1.00	0.00	1.00
Uniform Delay (d), s/veh	6.9	0.0	0.0	6.4	9.7	9.7	81.4	0.0	63.2	74.0	0.0	60.0
Incr Delay (d2), s/veh	0.1	1.7	1.6	0.0	0.3	0.2	1.7	0.0	1.2	3.4	0.0	0.3
Initial Q Delay(d3),s/veh	0.0	0.0	0.0	0.0	0.0	0.0	0.0	0.0	0.0	0.0	0.0	0.0
%ile BackOfQ(50%),veh/ln	0.5	0.6	0.6	0.3	8.3	8.6	1.1	0.0	4.7	4.7	0.0	1.7
LnGrp Delay(d),s/veh	7.0	1.7	1.6	6.5	10.0	9.9	83.2	0.0	64.4	77.4	0.0	60.3
LnGrp LOS	A	A	A	A	A	A	F		E	E		E
Approach Vol, veh/h		1662			935			131			141	
Approach Delay, s/veh		1.8			9.9			67.6			72.1	
Approach LOS		A			A			E			E	

Timer	1	2	3	4	5	6	7	8
Assigned Phs	1	2		4	5	6		8
Phs Duration (G+Y+Rc), s	8.6	126.9		34.5	9.7	125.7		34.5
Change Period (Y+Rc), s	5.4	5.4		5.4	5.4	5.4		5.4
Max Green Setting (Gmax), s	6.6	116.6		30.6	6.6	116.6		30.6
Max Q Clear Time (g_c+I1), s	2.6	2.0		26.2	3.1	18.8		28.9
Green Ext Time (p_c), s	0.0	42.6		0.6	0.0	40.7		0.2

Intersection Summary	
HCM 2010 Ctrl Delay	10.9
HCM 2010 LOS	B

Movement	EBL	EBT	EBR	WBL	WBT	WBR	NBL	NBT	NBR	SBL	SBT	SBR
Lane Configurations												
Traffic Volume (veh/h)	30	1200	30	70	780	70	30	90	130	130	90	30
Future Volume (veh/h)	30	1200	30	70	780	70	30	90	130	130	90	30
Number	5	2	12	1	6	16	3	8	18	7	4	14
Initial Q (Qb), veh	0	0	0	0	0	0	0	0	0	0	0	0
Ped-Bike Adj(A_pbT)	1.00		1.00	1.00		1.00	1.00		1.00	1.00		1.00
Parking Bus, Adj	1.00	1.00	1.00	1.00	1.00	1.00	1.00	1.00	1.00	1.00	1.00	1.00
Adj Sat Flow, veh/h/ln	1863	1863	1900	1863	1863	1900	1863	1863	1900	1863	1863	1900
Adj Flow Rate, veh/h	33	1304	33	76	848	76	33	98	141	141	98	33
Adj No. of Lanes	1	2	0	1	2	0	1	1	0	1	1	0
Peak Hour Factor	0.92	0.92	0.92	0.92	0.92	0.92	0.92	0.92	0.92	0.92	0.92	0.92
Percent Heavy Veh, %	2	2	2	2	2	2	2	2	2	2	2	2
Cap, veh/h	372	2144	54	341	2015	181	273	110	158	203	284	96
Arrive On Green	0.05	1.00	1.00	0.03	0.61	0.61	0.02	0.16	0.16	0.08	0.21	0.21
Sat Flow, veh/h	1774	3527	89	1774	3286	294	1774	692	995	1774	1334	449
Grp Volume(v), veh/h	33	654	683	76	457	467	33	0	239	141	0	131
Grp Sat Flow(s),veh/h/ln	1774	1770	1847	1774	1770	1811	1774	0	1687	1774	0	1783
Q Serve(g_s), s	1.2	0.0	0.0	2.8	22.9	22.9	2.6	0.0	23.6	11.0	0.0	10.6
Cycle Q Clear(g_c), s	1.2	0.0	0.0	2.8	22.9	22.9	2.6	0.0	23.6	11.0	0.0	10.6
Prop In Lane	1.00		0.05	1.00		0.16	1.00		0.59	1.00		0.25
Lane Grp Cap(c), veh/h	372	1076	1123	341	1085	1111	273	0	269	203	0	380
V/C Ratio(X)	0.09	0.61	0.61	0.22	0.42	0.42	0.12	0.00	0.89	0.70	0.00	0.34
Avail Cap(c_a), veh/h	389	1076	1123	404	1085	1111	290	0	343	239	0	478
HCM Platoon Ratio	2.00	2.00	2.00	1.00	1.00	1.00	1.00	1.00	1.00	1.00	1.00	1.00
Upstream Filter(I)	0.87	0.87	0.87	0.95	0.95	0.95	1.00	0.00	1.00	1.00	0.00	1.00
Uniform Delay (d), s/veh	13.0	0.0	0.0	11.7	17.1	17.1	57.9	0.0	70.0	54.4	0.0	56.8
Incr Delay (d2), s/veh	0.1	2.2	2.1	0.3	1.1	1.1	0.2	0.0	20.1	6.9	0.0	0.5
Initial Q Delay(d3),s/veh	0.0	0.0	0.0	0.0	0.0	0.0	0.0	0.0	0.0	0.0	0.0	0.0
%ile BackOfQ(50%),veh/ln	0.6	0.7	0.7	1.4	11.5	11.8	1.3	0.0	12.5	5.8	0.0	5.3
LnGrp Delay(d),s/veh	13.1	2.2	2.1	12.0	18.3	18.2	58.1	0.0	90.2	61.3	0.0	57.3
LnGrp LOS	B	A	A	B	B	B	E		F	E		E
Approach Vol, veh/h		1370			1000			272			272	
Approach Delay, s/veh		2.4			17.8			86.3			59.4	
Approach LOS		A			B			F			E	

Timer	1	2	3	4	5	6	7	8
Assigned Phs	1	2	3	4	5	6	7	8
Phs Duration (G+Y+Rc), s	10.3	108.7	9.3	41.6	9.3	109.7	18.5	32.5
Change Period (Y+Rc), s	5.4	5.4	5.4	5.4	5.4	5.4	5.4	5.4
Max Green Setting (Gmax), s	10.9	86.3	5.6	45.6	5.6	91.6	16.6	34.6
Max Q Clear Time (g_c+I1), s	4.8	2.0	4.6	12.6	3.2	24.9	13.0	25.6
Green Ext Time (p_c), s	0.1	29.3	0.0	2.5	0.0	27.5	0.1	1.5

Intersection Summary	
HCM 2010 Ctrl Delay	20.9
HCM 2010 LOS	C

Movement	EBT	EBR	WBL	WBT	NBL	NBR
Lane Configurations						
Traffic Volume (veh/h)	940	50	90	790	110	260
Future Volume (veh/h)	940	50	90	790	110	260
Number	2	12	1	6	3	18
Initial Q (Qb), veh	0	0	0	0	0	0
Ped-Bike Adj(A_pbT)		1.00	1.00		1.00	1.00
Parking Bus, Adj	1.00	1.00	1.00	1.00	1.00	1.00
Adj Sat Flow, veh/h/ln	1863	1900	1863	1863	1863	1863
Adj Flow Rate, veh/h	1022	54	98	859	120	283
Adj No. of Lanes	2	0	1	2	1	1
Peak Hour Factor	0.92	0.92	0.92	0.92	0.92	0.92
Percent Heavy Veh, %	2	2	2	2	2	2
Cap, veh/h	2419	128	398	2719	298	312
Arrive On Green	0.71	0.71	0.03	0.77	0.17	0.17
Sat Flow, veh/h	3513	181	1774	3632	1774	1583
Grp Volume(v), veh/h	529	547	98	859	120	283
Grp Sat Flow(s),veh/h/ln	1770	1831	1774	1770	1774	1583
Q Serve(g_s), s	21.2	21.2	2.5	12.6	10.3	28.6
Cycle Q Clear(g_c), s	21.2	21.2	2.5	12.6	10.3	28.6
Prop In Lane		0.10	1.00		1.00	1.00
Lane Grp Cap(c), veh/h	1252	1295	398	2719	298	312
V/C Ratio(X)	0.42	0.42	0.25	0.32	0.40	0.91
Avail Cap(c_a), veh/h	1252	1295	718	2719	298	312
HCM Platoon Ratio	1.00	1.00	1.00	1.00	1.00	1.00
Upstream Filter(I)	1.00	1.00	0.91	0.91	1.00	1.00
Uniform Delay (d), s/veh	10.4	10.4	7.7	6.0	63.1	66.7
Incr Delay (d2), s/veh	1.0	1.0	0.3	0.1	0.9	28.3
Initial Q Delay(d3),s/veh	0.0	0.0	0.0	0.0	0.0	0.0
%ile BackOfQ(50%),veh/ln	10.6	11.0	1.2	6.1	5.1	15.5
LnGrp Delay(d),s/veh	11.4	11.4	7.9	6.1	63.9	95.0
LnGrp LOS	B	B	A	A	E	F
Approach Vol, veh/h	1076			957	403	
Approach Delay, s/veh	11.4			6.3	85.7	
Approach LOS	B			A	F	

Timer	1	2	3	4	5	6	7	8
Assigned Phs	1	2				6		8
Phs Duration (G+Y+Rc), s	10.4	125.6				136.0		34.0
Change Period (Y+Rc), s	5.4	5.4				5.4		5.4
Max Green Setting (Gmax), s	35.6	89.6				130.6		28.6
Max Q Clear Time (g_c+I1), s	4.5	23.2				14.6		30.6
Green Ext Time (p_c), s	0.2	21.3				22.8		0.0

Intersection Summary	
HCM 2010 Ctrl Delay	21.7
HCM 2010 LOS	C

Movement	EBL	EBT	EBR	WBL	WBT	WBR	NBL	NBT	NBR	SBL	SBT	SBR
Lane Configurations												
Traffic Volume (veh/h)	50	590	50	50	850	50	90	150	130	220	110	40
Future Volume (veh/h)	50	590	50	50	850	50	90	150	130	220	110	40
Number	5	2	12	1	6	16	3	8	18	7	4	14
Initial Q (Qb), veh	0	0	0	0	0	0	0	0	0	0	0	0
Ped-Bike Adj(A_pbT)	1.00		1.00	1.00		1.00	1.00		1.00	1.00		1.00
Parking Bus, Adj	1.00	1.00	1.00	1.00	1.00	1.00	1.00	1.00	1.00	1.00	1.00	1.00
Adj Sat Flow, veh/h/ln	1863	1863	1900	1863	1863	1900	1863	1863	1900	1863	1863	1900
Adj Flow Rate, veh/h	54	641	54	54	924	54	98	163	141	239	120	43
Adj No. of Lanes	1	1	0	1	1	0	1	1	0	1	1	0
Peak Hour Factor	0.92	0.92	0.92	0.92	0.92	0.92	0.92	0.92	0.92	0.92	0.92	0.92
Percent Heavy Veh, %	2	2	2	2	2	2	2	2	2	2	2	2
Cap, veh/h	119	953	80	301	980	57	383	293	254	264	416	149
Arrive On Green	0.56	0.56	0.56	0.56	0.56	0.56	0.32	0.32	0.32	0.32	0.32	0.32
Sat Flow, veh/h	573	1695	143	747	1743	102	1218	923	799	1071	1310	470
Grp Volume(v), veh/h	54	0	695	54	0	978	98	0	304	239	0	163
Grp Sat Flow(s),veh/h/ln	573	0	1838	747	0	1845	1218	0	1722	1071	0	1780
Q Serve(g_s), s	6.1	0.0	24.0	4.9	0.0	44.5	5.9	0.0	13.2	15.4	0.0	6.2
Cycle Q Clear(g_c), s	50.6	0.0	24.0	28.9	0.0	44.5	12.1	0.0	13.2	28.6	0.0	6.2
Prop In Lane	1.00		0.08	1.00		0.06	1.00		0.46	1.00		0.26
Lane Grp Cap(c), veh/h	119	0	1033	301	0	1037	383	0	547	264	0	566
V/C Ratio(X)	0.45	0.00	0.67	0.18	0.00	0.94	0.26	0.00	0.56	0.91	0.00	0.29
Avail Cap(c_a), veh/h	119	0	1033	301	0	1037	383	0	547	264	0	566
HCM Platoon Ratio	1.00	1.00	1.00	1.00	1.00	1.00	1.00	1.00	1.00	1.00	1.00	1.00
Upstream Filter(I)	1.00	0.00	1.00	1.00	0.00	1.00	1.00	0.00	1.00	1.00	0.00	1.00
Uniform Delay (d), s/veh	42.8	0.0	13.9	24.0	0.0	18.4	27.6	0.0	25.4	39.1	0.0	23.1
Incr Delay (d2), s/veh	2.7	0.0	1.7	0.3	0.0	16.1	0.3	0.0	1.2	32.0	0.0	0.3
Initial Q Delay(d3),s/veh	0.0	0.0	0.0	0.0	0.0	0.0	0.0	0.0	0.0	0.0	0.0	0.0
%ile BackOfQ(50%),veh/ln	1.4	0.0	12.5	1.0	0.0	26.9	2.0	0.0	6.4	8.3	0.0	3.1
LnGrp Delay(d),s/veh	45.5	0.0	15.6	24.3	0.0	34.4	27.9	0.0	26.7	71.1	0.0	23.3
LnGrp LOS	D		B	C		C	C		C	E		C
Approach Vol, veh/h		749			1032			402			402	
Approach Delay, s/veh		17.7			33.9			27.0			51.7	
Approach LOS		B			C			C			D	

Timer	1	2	3	4	5	6	7	8
Assigned Phs		2		4		6		8
Phs Duration (G+Y+Rc), s		56.0		34.0		56.0		34.0
Change Period (Y+Rc), s		5.4		5.4		5.4		5.4
Max Green Setting (Gmax), s		50.6		28.6		50.6		28.6
Max Q Clear Time (g_c+I1), s		52.6		30.6		46.5		15.2
Green Ext Time (p_c), s		0.0		0.0		3.5		3.7

Intersection Summary	
HCM 2010 Ctrl Delay	30.9
HCM 2010 LOS	C

Movement	EBL	EBT	EBR	WBL	WBT	WBR	NBL	NBT	NBR	SBL	SBT	SBR
Lane Configurations												
Traffic Volume (veh/h)	38	171	143	92	215	377	107	525	87	433	901	35
Future Volume (veh/h)	38	171	143	92	215	377	107	525	87	433	901	35
Number	5	2	12	1	6	16	3	8	18	7	4	14
Initial Q (Qb), veh	0	0	0	0	0	0	0	0	0	0	0	0
Ped-Bike Adj(A_pbT)	1.00		1.00	1.00		1.00	1.00		1.00	1.00		1.00
Parking Bus, Adj	1.00	1.00	1.00	1.00	1.00	1.00	1.00	1.00	1.00	1.00	1.00	1.00
Adj Sat Flow, veh/h/ln	1863	1863	1900	1863	1863	1863	1863	1863	1900	1863	1863	1900
Adj Flow Rate, veh/h	44	192	174	131	239	433	134	640	114	466	990	40
Adj No. of Lanes	1	1	0	1	1	1	1	2	0	1	2	0
Peak Hour Factor	0.86	0.89	0.82	0.70	0.90	0.87	0.80	0.82	0.76	0.93	0.91	0.88
Percent Heavy Veh, %	2	2	2	2	2	2	2	2	2	2	2	2
Cap, veh/h	263	210	190	221	483	410	290	686	122	501	1318	53
Arrive On Green	0.04	0.23	0.23	0.06	0.26	0.26	0.08	0.23	0.23	0.23	0.38	0.38
Sat Flow, veh/h	1774	902	817	1774	1863	1583	1774	3004	534	1774	3468	140
Grp Volume(v), veh/h	44	0	366	131	239	433	134	377	377	466	505	525
Grp Sat Flow(s),veh/h/ln	1774	0	1719	1774	1863	1583	1774	1770	1768	1774	1770	1838
Q Serve(g_s), s	1.6	0.0	18.2	4.9	9.6	22.7	5.0	18.3	18.3	17.7	21.7	21.7
Cycle Q Clear(g_c), s	1.6	0.0	18.2	4.9	9.6	22.7	5.0	18.3	18.3	17.7	21.7	21.7
Prop In Lane	1.00		0.48	1.00		1.00	1.00		0.30	1.00		0.08
Lane Grp Cap(c), veh/h	263	0	400	221	483	410	290	404	404	501	673	699
V/C Ratio(X)	0.17	0.00	0.92	0.59	0.50	1.06	0.46	0.93	0.93	0.93	0.75	0.75
Avail Cap(c_a), veh/h	298	0	416	221	483	410	302	404	404	533	693	719
HCM Platoon Ratio	1.00	1.00	1.00	1.00	1.00	1.00	1.00	1.00	1.00	1.00	1.00	1.00
Upstream Filter(I)	1.00	0.00	1.00	1.00	1.00	1.00	1.00	1.00	1.00	1.00	1.00	1.00
Uniform Delay (d), s/veh	24.2	0.0	32.8	25.6	27.6	32.5	23.4	33.2	33.2	21.7	23.6	23.6
Incr Delay (d2), s/veh	0.3	0.0	24.1	4.2	0.8	59.8	1.1	28.4	28.9	22.4	4.5	4.3
Initial Q Delay(d3),s/veh	0.0	0.0	0.0	0.0	0.0	0.0	0.0	0.0	0.0	0.0	0.0	0.0
%ile BackOfQ(50%),veh/ln	0.8	0.0	11.3	2.6	5.0	16.7	2.5	12.1	12.2	14.0	11.4	11.8
LnGrp Delay(d),s/veh	24.5	0.0	56.9	29.8	28.4	92.2	24.6	61.6	62.1	44.1	28.0	27.9
LnGrp LOS	C		E	C	C	F	C	E	E	D	C	C
Approach Vol, veh/h		410			803			888			1496	
Approach Delay, s/veh		53.4			63.0			56.2			33.0	
Approach LOS		D			E			E			C	

Timer	1	2	3	4	5	6	7	8
Assigned Phs	1	2	3	4	5	6	7	8
Phs Duration (G+Y+Rc), s	11.0	25.8	12.1	38.7	8.7	28.1	25.4	25.4
Change Period (Y+Rc), s	5.4	5.4	5.4	5.4	5.4	5.4	5.4	5.4
Max Green Setting (Gmax), s	5.6	21.2	7.3	34.3	5.0	21.8	21.6	20.0
Max Q Clear Time (g_c+I1), s	6.9	20.2	7.0	23.7	3.6	24.7	19.7	20.3
Green Ext Time (p_c), s	0.0	0.2	0.0	7.5	0.0	0.0	0.4	0.0

Intersection Summary	
HCM 2010 Ctrl Delay	47.8
HCM 2010 LOS	D

Movement	EBL	EBT	EBR	WBL	WBT	WBR	NBL	NBT	NBR	SBL	SBT	SBR
Lane Configurations												
Traffic Volume (veh/h)	253	623	126	604	1249	629	177	1028	321	553	2197	236
Future Volume (veh/h)	253	623	126	604	1249	629	177	1028	321	553	2197	236
Number	5	2	12	1	6	16	3	8	18	7	4	14
Initial Q (Qb), veh	0	0	0	0	0	0	0	0	0	0	0	0
Ped-Bike Adj(A_pbT)	1.00		1.00	1.00		1.00	1.00		1.00	1.00		1.00
Parking Bus, Adj	1.00	1.00	1.00	1.00	1.00	1.00	1.00	1.00	1.00	1.00	1.00	1.00
Adj Sat Flow, veh/h/ln	1863	1863	1900	1863	1863	1863	1863	1863	1863	1863	1863	1900
Adj Flow Rate, veh/h	312	663	140	679	1403	699	242	1130	412	570	2497	278
Adj No. of Lanes	2	2	0	2	2	1	2	2	1	2	3	0
Peak Hour Factor	0.81	0.94	0.90	0.89	0.89	0.90	0.73	0.91	0.78	0.97	0.88	0.85
Percent Heavy Veh, %	2	2	2	2	2	2	2	2	2	2	2	2
Cap, veh/h	266	710	150	519	1123	752	197	1076	720	541	1883	204
Arrive On Green	0.15	0.49	0.49	0.15	0.32	0.32	0.06	0.30	0.30	0.16	0.40	0.40
Sat Flow, veh/h	3442	2910	614	3442	3539	1583	3442	3539	1583	3442	4660	504
Grp Volume(v), veh/h	312	403	400	679	1403	699	242	1130	412	570	1797	978
Grp Sat Flow(s),veh/h/ln	1721	1770	1754	1721	1770	1583	1721	1770	1583	1721	1695	1774
Q Serve(g_s), s	11.6	32.1	32.2	22.6	47.6	40.3	8.6	45.6	10.2	23.6	60.6	60.6
Cycle Q Clear(g_c), s	11.6	32.1	32.2	22.6	47.6	40.3	8.6	45.6	10.2	23.6	60.6	60.6
Prop In Lane	1.00		0.35	1.00		1.00	1.00		1.00	1.00		0.28
Lane Grp Cap(c), veh/h	266	432	428	519	1123	752	197	1076	720	541	1370	717
V/C Ratio(X)	1.17	0.93	0.93	1.31	1.25	0.93	1.23	1.05	0.57	1.05	1.31	1.36
Avail Cap(c_a), veh/h	266	432	428	519	1123	752	197	1076	720	541	1370	717
HCM Platoon Ratio	2.00	2.00	2.00	1.00	1.00	1.00	1.00	1.00	1.00	1.00	1.00	1.00
Upstream Filter(I)	0.90	0.90	0.90	1.00	1.00	1.00	1.00	1.00	1.00	1.00	1.00	1.00
Uniform Delay (d), s/veh	63.4	37.2	37.3	63.7	51.2	17.2	70.7	52.2	11.7	63.2	44.7	44.7
Incr Delay (d2), s/veh	107.3	27.3	27.8	152.6	119.7	18.0	138.3	41.6	1.1	53.3	145.7	173.1
Initial Q Delay(d3),s/veh	0.0	0.0	0.0	0.0	0.0	0.0	0.0	0.0	0.0	0.0	0.0	0.0
%ile BackOfQ(50%),veh/ln	9.4	18.7	18.6	21.7	41.9	21.2	7.9	28.5	6.6	15.2	56.1	64.1
LnGrp Delay(d),s/veh	170.7	64.6	65.0	216.3	170.9	35.3	209.0	93.8	12.8	116.5	190.4	217.8
LnGrp LOS	F	E	E	F	F	D	F	F	B	F	F	F
Approach Vol, veh/h		1115			2781			1784			3345	
Approach Delay, s/veh		94.5			147.9			90.7			185.8	
Approach LOS		F			F			F			F	

Timer	1	2	3	4	5	6	7	8
Assigned Phs	1	2	3	4	5	6	7	8
Phs Duration (G+Y+Rc), s	28.0	42.0	14.0	66.0	17.0	53.0	29.0	51.0
Change Period (Y+Rc), s	5.4	5.4	5.4	5.4	5.4	5.4	5.4	5.4
Max Green Setting (Gmax), s	22.6	36.6	8.6	60.6	11.6	47.6	23.6	45.6
Max Q Clear Time (g_c+I1), s	24.6	34.2	10.6	62.6	13.6	49.6	25.6	47.6
Green Ext Time (p_c), s	0.0	1.1	0.0	0.0	0.0	0.0	0.0	0.0

Intersection Summary	
HCM 2010 Ctrl Delay	144.1
HCM 2010 LOS	F

Movement	EBL	EBT	EBR	WBL	WBT	WBR	NBL	NBT	NBR	SBL	SBT	SBR
Lane Configurations												
Traffic Volume (veh/h)	120	1400	30	30	2500	120	20	20	20	300	20	30
Future Volume (veh/h)	120	1400	30	30	2500	120	20	20	20	300	20	30
Number	5	2	12	1	6	16	3	8	18	7	4	14
Initial Q (Qb), veh	0	0	0	0	0	0	0	0	0	0	0	0
Ped-Bike Adj(A_pbT)	1.00		1.00	1.00		1.00	1.00		1.00	1.00		1.00
Parking Bus, Adj	1.00	1.00	1.00	1.00	1.00	1.00	1.00	1.00	1.00	1.00	1.00	1.00
Adj Sat Flow, veh/h/ln	1863	1863	1900	1863	1863	1900	1900	1863	1900	1863	1863	1863
Adj Flow Rate, veh/h	130	1522	33	33	2717	130	22	22	22	342	0	33
Adj No. of Lanes	1	3	0	1	3	0	0	1	0	2	0	1
Peak Hour Factor	0.92	0.92	0.92	0.92	0.92	0.92	0.92	0.92	0.92	0.92	0.92	0.92
Percent Heavy Veh, %	2	2	2	2	2	2	2	2	2	2	2	2
Cap, veh/h	151	3462	75	309	3258	154	25	25	25	395	0	176
Arrive On Green	0.09	1.00	1.00	0.02	0.65	0.65	0.04	0.04	0.04	0.11	0.00	0.11
Sat Flow, veh/h	1774	5122	111	1774	4977	235	577	577	577	3548	0	1583
Grp Volume(v), veh/h	130	1007	548	33	1839	1008	66	0	0	342	0	33
Grp Sat Flow(s),veh/h/ln	1774	1695	1843	1774	1695	1821	1732	0	0	1774	0	1583
Q Serve(g_s), s	4.9	0.0	0.0	0.9	61.4	64.2	5.7	0.0	0.0	14.2	0.0	2.8
Cycle Q Clear(g_c), s	4.9	0.0	0.0	0.9	61.4	64.2	5.7	0.0	0.0	14.2	0.0	2.8
Prop In Lane	1.00		0.06	1.00		0.13	0.33		0.33	1.00		1.00
Lane Grp Cap(c), veh/h	151	2291	1246	309	2219	1192	76	0	0	395	0	176
V/C Ratio(X)	0.86	0.44	0.44	0.11	0.83	0.85	0.87	0.00	0.00	0.87	0.00	0.19
Avail Cap(c_a), veh/h	194	2291	1246	326	2219	1192	76	0	0	464	0	207
HCM Platoon Ratio	2.00	2.00	2.00	1.00	1.00	1.00	1.00	1.00	1.00	1.00	1.00	1.00
Upstream Filter(I)	0.92	0.92	0.92	0.73	0.73	0.73	1.00	0.00	0.00	1.00	0.00	1.00
Uniform Delay (d), s/veh	39.3	0.0	0.0	7.9	19.6	20.0	71.3	0.0	0.0	65.6	0.0	60.5
Incr Delay (d2), s/veh	23.9	0.6	1.0	0.1	2.8	5.6	60.3	0.0	0.0	14.1	0.0	0.5
Initial Q Delay(d3),s/veh	0.0	0.0	0.0	0.0	0.0	0.0	0.0	0.0	0.0	0.0	0.0	0.0
%ile BackOfQ(50%),veh/ln	6.2	0.2	0.4	0.4	29.5	34.1	4.0	0.0	0.0	7.8	0.0	1.3
LnGrp Delay(d),s/veh	63.3	0.6	1.0	8.0	22.3	25.6	131.6	0.0	0.0	79.7	0.0	61.0
LnGrp LOS	E	A	A	A	C	C	F			E		E
Approach Vol, veh/h		1685			2880			66			375	
Approach Delay, s/veh		5.6			23.3			131.6			78.0	
Approach LOS		A			C			F			E	

Timer	1	2	3	4	5	6	7	8
Assigned Phs	1	2		4	5	6		8
Phs Duration (G+Y+Rc), s	9.1	106.8		22.1	12.3	103.6		12.0
Change Period (Y+Rc), s	5.4	5.4		5.4	5.4	5.4		5.4
Max Green Setting (Gmax), s	5.2	97.0		19.6	10.6	91.6		6.6
Max Q Clear Time (g_c+I1), s	2.9	2.0		16.2	6.9	66.2		7.7
Green Ext Time (p_c), s	0.0	87.7		0.5	0.1	24.8		0.0

Intersection Summary	
HCM 2010 Ctrl Delay	22.9
HCM 2010 LOS	C

Notes

User approved volume balancing among the lanes for turning movement.

Movement	EBL	EBT	EBR	WBL	WBT	WBR	NBL	NBT	NBR	SBL	SBT	SBR
Lane Configurations												
Traffic Volume (veh/h)	710	834	356	209	1542	25	242	564	128	97	763	325
Future Volume (veh/h)	710	834	356	209	1542	25	242	564	128	97	763	325
Number	5	2	12	1	6	16	3	8	18	7	4	14
Initial Q (Qb), veh	0	0	0	0	0	0	0	0	0	0	0	0
Ped-Bike Adj(A_pbT)	1.00		1.00	1.00		1.00	1.00		1.00	1.00		1.00
Parking Bus, Adj	1.00	1.00	1.00	1.00	1.00	1.00	1.00	1.00	1.00	1.00	1.00	1.00
Adj Sat Flow, veh/h/ln	1863	1863	1900	1863	1863	1863	1863	1863	1863	1863	1863	1863
Adj Flow Rate, veh/h	798	970	424	227	1623	0	269	627	164	111	820	0
Adj No. of Lanes	2	2	0	1	2	1	1	2	1	1	2	1
Peak Hour Factor	0.89	0.86	0.84	0.92	0.95	0.69	0.90	0.90	0.78	0.87	0.93	0.86
Percent Heavy Veh, %	2	2	2	2	2	2	2	2	2	2	2	2
Cap, veh/h	656	1121	484	242	1359	608	209	793	528	189	675	302
Arrive On Green	0.19	0.47	0.47	0.11	0.38	0.00	0.09	0.22	0.22	0.06	0.19	0.00
Sat Flow, veh/h	3442	2410	1039	1774	3539	1583	1774	3539	1583	1774	3539	1583
Grp Volume(v), veh/h	798	709	685	227	1623	0	269	627	164	111	820	0
Grp Sat Flow(s),veh/h/ln	1721	1770	1679	1774	1770	1583	1774	1770	1583	1774	1770	1583
Q Serve(g_s), s	28.6	53.6	55.3	14.9	57.6	0.0	13.6	25.1	11.6	7.5	28.6	0.0
Cycle Q Clear(g_c), s	28.6	53.6	55.3	14.9	57.6	0.0	13.6	25.1	11.6	7.5	28.6	0.0
Prop In Lane	1.00		0.62	1.00		1.00	1.00		1.00	1.00		1.00
Lane Grp Cap(c), veh/h	656	823	781	242	1359	608	209	793	528	189	675	302
V/C Ratio(X)	1.22	0.86	0.88	0.94	1.19	0.00	1.29	0.79	0.31	0.59	1.22	0.00
Avail Cap(c_a), veh/h	656	823	781	242	1359	608	209	793	528	189	675	302
HCM Platoon Ratio	1.00	1.00	1.00	1.00	1.00	1.00	1.00	1.00	1.00	1.00	1.00	1.00
Upstream Filter(I)	1.00	1.00	1.00	0.74	0.74	0.00	1.00	1.00	1.00	1.00	1.00	0.00
Uniform Delay (d), s/veh	60.7	35.8	36.2	44.3	46.2	0.0	46.5	54.9	37.2	46.8	60.7	0.0
Incr Delay (d2), s/veh	110.8	9.2	11.0	33.9	93.0	0.0	160.7	5.5	0.3	4.7	110.1	0.0
Initial Q Delay(d3),s/veh	0.0	0.0	0.0	0.0	0.0	0.0	0.0	0.0	0.0	0.0	0.0	0.0
%ile BackOfQ(50%),veh/ln	23.7	28.3	27.9	11.6	45.7	0.0	11.3	12.9	5.1	3.9	24.3	0.0
LnGrp Delay(d),s/veh	171.5	45.0	47.3	78.2	139.2	0.0	207.2	60.3	37.5	51.6	170.8	0.0
LnGrp LOS	F	D	D	E	F		F	E	D	D	F	
Approach Vol, veh/h		2192			1850			1060			931	
Approach Delay, s/veh		91.7			131.7			94.1			156.6	
Approach LOS		F			F			F			F	

Timer	1	2	3	4	5	6	7	8
Assigned Phs	1	2	3	4	5	6	7	8
Phs Duration (G+Y+Rc), s	21.8	75.2	19.0	34.0	34.0	63.0	14.0	39.0
Change Period (Y+Rc), s	5.4	5.4	5.4	5.4	5.4	5.4	5.4	5.4
Max Green Setting (Gmax), s	16.4	69.8	13.6	28.6	28.6	57.6	8.6	33.6
Max Q Clear Time (g_c+I1), s	16.9	57.3	15.6	30.6	30.6	59.6	9.5	27.1
Green Ext Time (p_c), s	0.0	9.1	0.0	0.0	0.0	0.0	0.0	4.6

Intersection Summary	
HCM 2010 Ctrl Delay	114.4
HCM 2010 LOS	F

Movement	EBL	EBT	EBR	WBL	WBT	WBR	NBL	NBT	NBR	SBL	SBT	SBR
Lane Configurations												
Traffic Volume (veh/h)	0	860	188	202	1301	0	0	0	0	407	22	332
Future Volume (veh/h)	0	860	188	202	1301	0	0	0	0	407	22	332
Number	5	2	12	1	6	16				7	4	14
Initial Q (Qb), veh	0	0	0	0	0	0				0	0	0
Ped-Bike Adj(A_pbT)	1.00		1.00	1.00		1.00				1.00		1.00
Parking Bus, Adj	1.00	1.00	1.00	1.00	1.00	1.00				1.00	1.00	1.00
Adj Sat Flow, veh/h/ln	0	1863	1863	1863	1863	0				1863	1863	1863
Adj Flow Rate, veh/h	0	1024	0	252	1369	0				475	0	0
Adj No. of Lanes	0	4	1	2	2	0				2	0	1
Peak Hour Factor	1.00	0.84	0.92	0.80	0.95	1.00				0.91	0.56	0.90
Percent Heavy Veh, %	0	2	2	2	2	0				2	2	2
Cap, veh/h	0	4150	1025	305	2733	0				553	0	247
Arrive On Green	0.00	0.65	0.00	0.09	0.77	0.00				0.16	0.00	0.00
Sat Flow, veh/h	0	6669	1583	3442	3632	0				3548	0	1583
Grp Volume(v), veh/h	0	1024	0	252	1369	0				475	0	0
Grp Sat Flow(s),veh/h/ln	0	1602	1583	1721	1770	0				1774	0	1583
Q Serve(g_s), s	0.0	10.1	0.0	10.8	21.6	0.0				19.6	0.0	0.0
Cycle Q Clear(g_c), s	0.0	10.1	0.0	10.8	21.6	0.0				19.6	0.0	0.0
Prop In Lane	0.00		1.00	1.00		0.00				1.00		1.00
Lane Grp Cap(c), veh/h	0	4150	1025	305	2733	0				553	0	247
V/C Ratio(X)	0.00	0.25	0.00	0.83	0.50	0.00				0.86	0.00	0.00
Avail Cap(c_a), veh/h	0	4150	1025	473	2733	0				1292	0	576
HCM Platoon Ratio	1.00	1.00	1.00	1.00	1.00	1.00				1.00	1.00	1.00
Upstream Filter(I)	0.00	0.51	0.00	0.89	0.89	0.00				1.00	0.00	0.00
Uniform Delay (d), s/veh	0.0	11.1	0.0	67.2	6.3	0.0				61.7	0.0	0.0
Incr Delay (d2), s/veh	0.0	0.1	0.0	6.2	0.6	0.0				4.0	0.0	0.0
Initial Q Delay(d3),s/veh	0.0	0.0	0.0	0.0	0.0	0.0				0.0	0.0	0.0
%ile BackOfQ(50%),veh/ln	0.0	4.4	0.0	5.4	10.7	0.0				9.9	0.0	0.0
LnGrp Delay(d),s/veh	0.0	11.2	0.0	73.4	6.9	0.0				65.8	0.0	0.0
LnGrp LOS		B		E	A					E		
Approach Vol, veh/h		1024			1621						475	
Approach Delay, s/veh		11.2			17.3						65.8	
Approach LOS		B			B						E	

Timer	1	2	3	4	5	6	7	8
Assigned Phs	1	2		4		6		
Phs Duration (G+Y+Rc), s	18.7	102.5		28.8		121.2		
Change Period (Y+Rc), s	5.4	5.4		5.4		5.4		
Max Green Setting (Gmax), s	20.6	58.6		54.6		84.6		
Max Q Clear Time (g_c+I1), s	12.8	12.1		21.6		23.6		
Green Ext Time (p_c), s	0.5	28.2		1.8		32.7		

Intersection Summary	
HCM 2010 Ctrl Delay	22.6
HCM 2010 LOS	C

Notes

User approved volume balancing among the lanes for turning movement.

Movement	EBL	EBT	EBR	WBL	WBT	WBR	NBL	NBT	NBR	SBL	SBT	SBR
Lane Configurations												
Traffic Volume (veh/h)	168	1066	0	0	1284	454	167	95	194	0	0	0
Future Volume (veh/h)	168	1066	0	0	1284	454	167	95	194	0	0	0
Number	5	2	12	1	6	16	3	8	18			
Initial Q (Qb), veh	0	0	0	0	0	0	0	0	0			
Ped-Bike Adj(A_pbT)	1.00		1.00	1.00		1.00	1.00		1.00			
Parking Bus, Adj	1.00	1.00	1.00	1.00	1.00	1.00	1.00	1.00	1.00			
Adj Sat Flow, veh/h/ln	1863	1863	0	0	1863	1900	1863	1863	1863			
Adj Flow Rate, veh/h	193	1198	0	0	1352	0	194	112	0			
Adj No. of Lanes	2	2	0	0	4	0	2	1	1			
Peak Hour Factor	0.87	0.89	1.00	1.00	0.95	0.91	0.86	0.85	0.84			
Percent Heavy Veh, %	2	2	0	0	2	2	2	2	2			
Cap, veh/h	242	2998	0	0	4747	0	287	151	128			
Arrive On Green	0.14	1.00	0.00	0.00	0.74	0.00	0.08	0.08	0.00			
Sat Flow, veh/h	3442	3632	0	0	6929	0	3548	1863	1583			
Grp Volume(v), veh/h	193	1198	0	0	1352	0	194	112	0			
Grp Sat Flow(s),veh/h/ln	1721	1770	0	0	1602	0	1774	1863	1583			
Q Serve(g_s), s	8.1	0.0	0.0	0.0	10.4	0.0	8.0	8.8	0.0			
Cycle Q Clear(g_c), s	8.1	0.0	0.0	0.0	10.4	0.0	8.0	8.8	0.0			
Prop In Lane	1.00		0.00	0.00		0.00	1.00		1.00			
Lane Grp Cap(c), veh/h	242	2998	0	0	4747	0	287	151	128			
V/C Ratio(X)	0.80	0.40	0.00	0.00	0.28	0.00	0.68	0.74	0.00			
Avail Cap(c_a), veh/h	450	2998	0	0	4747	0	937	492	418			
HCM Platoon Ratio	2.00	2.00	1.00	1.00	1.00	1.00	1.00	1.00	1.00			
Upstream Filter(I)	0.94	0.94	0.00	0.00	1.00	0.00	1.00	1.00	0.00			
Uniform Delay (d), s/veh	63.4	0.0	0.0	0.0	6.4	0.0	67.0	67.4	0.0			
Incr Delay (d2), s/veh	5.7	0.4	0.0	0.0	0.2	0.0	2.8	7.0	0.0			
Initial Q Delay(d3),s/veh	0.0	0.0	0.0	0.0	0.0	0.0	0.0	0.0	0.0			
%ile BackOfQ(50%),veh/ln	4.0	0.2	0.0	0.0	4.7	0.0	4.0	4.8	0.0			
LnGrp Delay(d),s/veh	69.1	0.4	0.0	0.0	6.5	0.0	69.8	74.5	0.0			
LnGrp LOS	E	A			A		E	E				
Approach Vol, veh/h		1391			1352			306				
Approach Delay, s/veh		9.9			6.5			71.5				
Approach LOS		A			A			E				

Timer	1	2	3	4	5	6	7	8
Assigned Phs		2			5	6		8
Phs Duration (G+Y+Rc), s		132.5			15.9	116.5		17.5
Change Period (Y+Rc), s		5.4			5.4	5.4		5.4
Max Green Setting (Gmax), s		99.6			19.6	74.6		39.6
Max Q Clear Time (g_c+I1), s		2.0			10.1	12.4		10.8
Green Ext Time (p_c), s		42.9			0.4	35.2		1.3

Intersection Summary	
HCM 2010 Ctrl Delay	14.6
HCM 2010 LOS	B

Notes

User approved volume balancing among the lanes for turning movement.

User approved ignoring U-Turning movement.

Movement	EBL	EBT	EBR	WBL	WBT	WBR	NBL	NBT	NBR	SBL	SBT	SBR
Lane Configurations												
Traffic Volume (veh/h)	94	778	296	242	1445	68	235	233	53	69	296	73
Future Volume (veh/h)	94	778	296	242	1445	68	235	233	53	69	296	73
Number	5	2	12	1	6	16	3	8	18	7	4	14
Initial Q (Qb), veh	0	0	0	0	0	0	0	0	0	0	0	0
Ped-Bike Adj(A_pbT)	1.00		1.00	1.00		1.00	1.00		1.00	1.00		1.00
Parking Bus, Adj	1.00	1.00	1.00	1.00	1.00	1.00	1.00	1.00	1.00	1.00	1.00	1.00
Adj Sat Flow, veh/h/ln	1863	1863	1900	1863	1863	1900	1863	1863	1863	1863	1863	1863
Adj Flow Rate, veh/h	112	855	344	252	1490	106	267	291	63	95	333	87
Adj No. of Lanes	1	2	0	1	2	0	1	1	1	1	1	1
Peak Hour Factor	0.84	0.91	0.86	0.96	0.97	0.64	0.88	0.80	0.84	0.73	0.89	0.84
Percent Heavy Veh, %	2	2	2	2	2	2	2	2	2	2	2	2
Cap, veh/h	157	1109	444	280	1650	117	285	503	570	269	359	380
Arrive On Green	0.05	0.45	0.45	0.09	0.49	0.49	0.12	0.27	0.27	0.05	0.19	0.19
Sat Flow, veh/h	1774	2468	989	1774	3353	237	1774	1863	1583	1774	1863	1583
Grp Volume(v), veh/h	112	612	587	252	783	813	267	291	63	95	333	87
Grp Sat Flow(s),veh/h/ln	1774	1770	1688	1774	1770	1821	1774	1863	1583	1774	1863	1583
Q Serve(g_s), s	5.1	43.7	44.0	11.1	60.4	61.5	17.8	20.3	4.0	6.5	26.4	6.6
Cycle Q Clear(g_c), s	5.1	43.7	44.0	11.1	60.4	61.5	17.8	20.3	4.0	6.5	26.4	6.6
Prop In Lane	1.00		0.59	1.00		0.13	1.00		1.00	1.00		1.00
Lane Grp Cap(c), veh/h	157	795	758	280	871	896	285	503	570	269	359	380
V/C Ratio(X)	0.71	0.77	0.77	0.90	0.90	0.91	0.94	0.58	0.11	0.35	0.93	0.23
Avail Cap(c_a), veh/h	164	795	758	352	871	896	285	512	577	269	368	387
HCM Platoon Ratio	1.00	1.00	1.00	1.00	1.00	1.00	1.00	1.00	1.00	1.00	1.00	1.00
Upstream Filter(I)	1.00	1.00	1.00	0.67	0.67	0.67	1.00	1.00	1.00	1.00	1.00	1.00
Uniform Delay (d), s/veh	34.0	34.8	34.9	30.2	34.7	34.9	42.7	47.3	32.0	46.1	59.5	45.9
Incr Delay (d2), s/veh	12.9	7.1	7.6	15.9	10.1	10.5	37.2	1.6	0.1	0.8	28.8	0.3
Initial Q Delay(d3),s/veh	0.0	0.0	0.0	0.0	0.0	0.0	0.0	0.0	0.0	0.0	0.0	0.0
%ile BackOfQ(50%),veh/ln	3.1	22.8	22.1	6.6	31.8	33.3	11.5	10.6	1.7	3.2	16.5	2.9
LnGrp Delay(d),s/veh	46.9	41.9	42.4	46.1	44.8	45.4	79.9	48.9	32.1	46.9	88.3	46.2
LnGrp LOS	D	D	D	D	D	D	E	D	C	D	F	D
Approach Vol, veh/h		1311			1848			621			515	
Approach Delay, s/veh		42.6			45.2			60.5			73.6	
Approach LOS		D			D			E			E	

Timer	1	2	3	4	5	6	7	8
Assigned Phs	1	2	3	4	5	6	7	8
Phs Duration (G+Y+Rc), s	18.9	72.8	24.0	34.3	12.4	79.2	12.4	45.9
Change Period (Y+Rc), s	5.4	5.4	5.4	5.4	5.4	5.4	5.4	5.4
Max Green Setting (Gmax), s	19.6	60.6	18.6	29.6	7.6	72.6	7.0	41.2
Max Q Clear Time (g_c+I1), s	13.1	46.0	19.8	28.4	7.1	63.5	8.5	22.3
Green Ext Time (p_c), s	0.4	12.6	0.0	0.6	0.0	8.3	0.0	4.2

Intersection Summary	
HCM 2010 Ctrl Delay	50.0
HCM 2010 LOS	D

Movement	EBL	EBT	WBT	WBR	SBL	SBR
Lane Configurations						
Traffic Volume (veh/h)	38	866	1744	86	212	69
Future Volume (veh/h)	38	866	1744	86	212	69
Number	5	2	6	16	7	14
Initial Q (Qb), veh	0	0	0	0	0	0
Ped-Bike Adj(A_pbT)	1.00			1.00	1.00	1.00
Parking Bus, Adj	1.00	1.00	1.00	1.00	1.00	1.00
Adj Sat Flow, veh/h/ln	1863	1863	1863	1900	1863	1863
Adj Flow Rate, veh/h	49	941	1762	102	259	93
Adj No. of Lanes	1	2	2	0	1	1
Peak Hour Factor	0.77	0.92	0.99	0.84	0.82	0.74
Percent Heavy Veh, %	2	2	2	2	2	2
Cap, veh/h	173	2713	2608	150	286	256
Arrive On Green	1.00	1.00	0.77	0.77	0.16	0.16
Sat Flow, veh/h	245	3632	3496	195	1774	1583
Grp Volume(v), veh/h	49	941	910	954	259	93
Grp Sat Flow(s),veh/h/ln	245	1770	1770	1828	1774	1583
Q Serve(g_s), s	13.5	0.0	37.0	38.2	21.5	7.8
Cycle Q Clear(g_c), s	51.8	0.0	37.0	38.2	21.5	7.8
Prop In Lane	1.00			0.11	1.00	1.00
Lane Grp Cap(c), veh/h	173	2713	1357	1402	286	256
V/C Ratio(X)	0.28	0.35	0.67	0.68	0.90	0.36
Avail Cap(c_a), veh/h	173	2713	1357	1402	374	334
HCM Platoon Ratio	2.00	2.00	1.00	1.00	1.00	1.00
Upstream Filter(I)	0.55	0.55	0.52	0.52	1.00	1.00
Uniform Delay (d), s/veh	8.6	0.0	8.4	8.6	61.8	56.0
Incr Delay (d2), s/veh	2.2	0.2	0.7	0.7	20.8	0.9
Initial Q Delay(d3),s/veh	0.0	0.0	0.0	0.0	0.0	0.0
%ile BackOfQ(50%),veh/ln	1.0	0.1	18.2	19.4	12.2	3.5
LnGrp Delay(d),s/veh	10.8	0.2	9.1	9.3	82.6	56.9
LnGrp LOS	B	A	A	A	F	E
Approach Vol, veh/h		990	1864		352	
Approach Delay, s/veh		0.7	9.2		75.8	
Approach LOS		A	A		E	

Timer	1	2	3	4	5	6	7	8
Assigned Phs		2		4		6		
Phs Duration (G+Y+Rc), s		120.4		29.6		120.4		
Change Period (Y+Rc), s		5.4		5.4		5.4		
Max Green Setting (Gmax), s		107.6		31.6		107.6		
Max Q Clear Time (g_c+I1), s		53.8		23.5		40.2		
Green Ext Time (p_c), s		39.7		0.7		46.4		

Intersection Summary	
HCM 2010 Ctrl Delay	13.9
HCM 2010 LOS	B

Movement	EBL	EBT	EBR	WBL	WBT	WBR	NBL	NBT	NBR	SBL	SBT	SBR
Lane Configurations												
Traffic Volume (veh/h)	251	636	12	11	1656	39	71	6	10	140	3	389
Future Volume (veh/h)	251	636	12	11	1656	39	71	6	10	140	3	389
Number	5	2	12	1	6	16	3	8	18	7	4	14
Initial Q (Qb), veh	0	0	0	0	0	0	0	0	0	0	0	0
Ped-Bike Adj(A_pbT)	1.00		1.00	1.00		1.00	1.00		1.00	1.00		1.00
Parking Bus, Adj	1.00	1.00	1.00	1.00	1.00	1.00	1.00	1.00	1.00	1.00	1.00	1.00
Adj Sat Flow, veh/h/ln	1863	1863	1900	1863	1863	1900	1900	1863	1863	1900	1863	1863
Adj Flow Rate, veh/h	289	707	17	13	1861	55	116	19	13	163	8	427
Adj No. of Lanes	1	2	0	1	2	0	0	1	1	0	1	1
Peak Hour Factor	0.87	0.90	0.69	0.83	0.89	0.71	0.61	0.31	0.75	0.86	0.38	0.91
Percent Heavy Veh, %	2	2	2	2	2	2	2	2	2	2	2	2
Cap, veh/h	311	2628	63	462	2002	59	303	42	291	307	13	509
Arrive On Green	0.14	0.74	0.74	0.57	0.57	0.57	0.18	0.18	0.18	0.18	0.18	0.18
Sat Flow, veh/h	1774	3532	85	727	3511	103	1406	230	1583	1413	69	1583
Grp Volume(v), veh/h	289	354	370	13	934	982	135	0	13	171	0	427
Grp Sat Flow(s),veh/h/ln	1774	1770	1848	727	1770	1845	1636	0	1583	1482	0	1583
Q Serve(g_s), s	18.4	9.6	9.6	1.2	72.0	73.4	0.0	0.0	1.0	5.2	0.0	27.6
Cycle Q Clear(g_c), s	18.4	9.6	9.6	1.2	72.0	73.4	10.0	0.0	1.0	15.2	0.0	27.6
Prop In Lane	1.00		0.05	1.00		0.06	0.86		1.00	0.95		1.00
Lane Grp Cap(c), veh/h	311	1317	1375	462	1009	1052	346	0	291	320	0	509
V/C Ratio(X)	0.93	0.27	0.27	0.03	0.93	0.93	0.39	0.00	0.04	0.54	0.00	0.84
Avail Cap(c_a), veh/h	341	1317	1375	462	1009	1052	346	0	291	320	0	509
HCM Platoon Ratio	1.00	1.00	1.00	1.00	1.00	1.00	1.00	1.00	1.00	1.00	1.00	1.00
Upstream Filter(I)	0.95	0.95	0.95	1.00	1.00	1.00	1.00	0.00	1.00	1.00	0.00	1.00
Uniform Delay (d), s/veh	51.5	6.1	6.1	14.1	29.3	29.6	54.0	0.0	50.4	55.9	0.0	47.2
Incr Delay (d2), s/veh	28.7	0.5	0.5	0.1	15.2	15.8	0.7	0.0	0.1	1.7	0.0	11.8
Initial Q Delay(d3),s/veh	0.0	0.0	0.0	0.0	0.0	0.0	0.0	0.0	0.0	0.0	0.0	0.0
%ile BackOfQ(50%),veh/ln	14.3	4.8	5.0	0.2	39.3	41.7	5.0	0.0	0.4	6.7	0.0	18.1
LnGrp Delay(d),s/veh	80.3	6.6	6.6	14.2	44.5	45.4	54.7	0.0	50.4	57.7	0.0	59.0
LnGrp LOS	F	A	A	B	D	D	D		D	E		E
Approach Vol, veh/h		1013			1929			148			598	
Approach Delay, s/veh		27.6			44.8			54.4			58.6	
Approach LOS		C			D			D			E	

Timer	1	2	3	4	5	6	7	8
Assigned Phs		2		4	5	6		8
Phs Duration (G+Y+Rc), s		117.0		33.0	26.1	90.9		33.0
Change Period (Y+Rc), s		5.4		5.4	5.4	5.4		5.4
Max Green Setting (Gmax), s		111.6		27.6	23.2	83.0		27.6
Max Q Clear Time (g_c+I1), s		11.6		29.6	20.4	75.4		12.0
Green Ext Time (p_c), s		47.0		0.0	0.2	6.9		3.1

Intersection Summary	
HCM 2010 Ctrl Delay	42.7
HCM 2010 LOS	D

Movement	EBL	EBT	EBR	WBL	WBT	WBR	NBL	NBT	NBR	SBL	SBT	SBR
Lane Configurations												
Traffic Volume (veh/h)	363	166	288	261	332	29	327	1465	83	75	2908	455
Future Volume (veh/h)	363	166	288	261	332	29	327	1465	83	75	2908	455
Number	5	2	12	1	6	16	3	8	18	7	4	14
Initial Q (Qb), veh	0	0	0	0	0	0	0	0	0	0	0	0
Ped-Bike Adj(A_pbT)	1.00		1.00	1.00		1.00	1.00		1.00	1.00		1.00
Parking Bus, Adj	1.00	1.00	1.00	1.00	1.00	1.00	1.00	1.00	1.00	1.00	1.00	1.00
Adj Sat Flow, veh/h/ln	1863	1863	1863	1863	1863	1900	1863	1863	1900	1863	1863	1863
Adj Flow Rate, veh/h	408	195	0	239	464	41	363	1526	104	101	3196	548
Adj No. of Lanes	2	1	1	1	2	0	2	3	0	1	3	1
Peak Hour Factor	0.89	0.85	0.86	0.85	0.90	0.70	0.90	0.96	0.80	0.74	0.91	0.83
Percent Heavy Veh, %	2	2	2	2	2	2	2	2	2	2	2	2
Cap, veh/h	440	231	196	220	419	37	312	2744	187	199	2631	819
Arrive On Green	0.04	0.04	0.00	0.12	0.12	0.12	0.09	0.56	0.56	0.04	0.52	0.52
Sat Flow, veh/h	3548	1863	1583	1774	3376	297	3442	4863	331	1774	5085	1583
Grp Volume(v), veh/h	408	195	0	239	255	250	363	1064	566	101	3196	548
Grp Sat Flow(s),veh/h/ln	1774	1863	1583	1774	1863	1810	1721	1695	1804	1774	1695	1583
Q Serve(g_s), s	17.2	15.6	0.0	18.6	18.6	18.6	13.6	29.9	29.9	4.6	77.6	38.3
Cycle Q Clear(g_c), s	17.2	15.6	0.0	18.6	18.6	18.6	13.6	29.9	29.9	4.6	77.6	38.3
Prop In Lane	1.00		1.00	1.00		0.16	1.00		0.18	1.00		1.00
Lane Grp Cap(c), veh/h	440	231	196	220	231	224	312	1913	1018	199	2631	819
V/C Ratio(X)	0.93	0.84	0.00	1.09	1.11	1.11	1.16	0.56	0.56	0.51	1.21	0.67
Avail Cap(c_a), veh/h	440	231	196	220	231	224	312	1913	1018	268	2631	819
HCM Platoon Ratio	0.33	0.33	0.33	1.00	1.00	1.00	1.00	1.00	1.00	1.00	1.00	1.00
Upstream Filter(I)	1.00	1.00	0.00	1.00	1.00	1.00	1.00	1.00	1.00	1.00	1.00	1.00
Uniform Delay (d), s/veh	71.3	70.5	0.0	65.7	65.7	65.7	68.2	20.8	20.8	25.4	36.2	26.7
Incr Delay (d2), s/veh	28.1	29.7	0.0	85.6	90.3	93.5	102.8	0.4	0.7	2.0	100.4	2.1
Initial Q Delay(d3),s/veh	0.0	0.0	0.0	0.0	0.0	0.0	0.0	0.0	0.0	0.0	0.0	0.0
%ile BackOfQ(50%),veh/ln	10.2	10.0	0.0	14.3	15.4	15.1	10.9	14.0	15.0	2.4	60.5	17.2
LnGrp Delay(d),s/veh	99.3	100.2	0.0	151.3	156.0	159.2	171.0	21.1	21.4	27.4	136.6	28.8
LnGrp LOS	F	F		F	F	F	F	C	C	C	F	C
Approach Vol, veh/h		603			744			1993			3845	
Approach Delay, s/veh		99.6			155.6			48.5			118.4	
Approach LOS		F			F			D			F	

Timer	1	2	3	4	5	6	7	8
Assigned Phs		2	3	4		6	7	8
Phs Duration (G+Y+Rc), s		24.0	19.0	83.0		24.0	12.0	90.0
Change Period (Y+Rc), s		5.4	5.4	5.4		5.4	5.4	5.4
Max Green Setting (Gmax), s		18.6	13.6	77.6		18.6	12.4	78.8
Max Q Clear Time (g_c+I1), s		19.2	15.6	79.6		20.6	6.6	31.9
Green Ext Time (p_c), s		0.0	0.0	0.0		0.0	0.1	20.9

Intersection Summary	
HCM 2010 Ctrl Delay	101.3
HCM 2010 LOS	F

Notes

User approved volume balancing among the lanes for turning movement.

Movement	EBL	EBT	EBR	WBL	WBT	WBR	NBL	NBT	NBR	SBL	SBT	SBR
Lane Configurations												
Traffic Volume (veh/h)	23	272	37	19	481	45	29	33	9	62	129	116
Future Volume (veh/h)	23	272	37	19	481	45	29	33	9	62	129	116
Number	5	2	12	1	6	16	3	8	18	7	4	14
Initial Q (Qb), veh	0	0	0	0	0	0	0	0	0	0	0	0
Ped-Bike Adj(A_pbT)	1.00		1.00	1.00		1.00	1.00		1.00	1.00		1.00
Parking Bus, Adj	1.00	1.00	1.00	1.00	1.00	1.00	1.00	1.00	1.00	1.00	1.00	1.00
Adj Sat Flow, veh/h/ln	1863	1863	1900	1863	1863	1900	1863	1863	1900	1863	1863	1900
Adj Flow Rate, veh/h	32	309	52	28	559	56	41	52	12	84	136	171
Adj No. of Lanes	1	1	0	1	1	0	1	1	0	1	1	0
Peak Hour Factor	0.72	0.88	0.71	0.68	0.86	0.80	0.70	0.63	0.75	0.74	0.95	0.68
Percent Heavy Veh, %	2	2	2	2	2	2	2	2	2	2	2	2
Cap, veh/h	246	637	107	423	678	68	217	290	67	428	162	204
Arrive On Green	0.03	0.41	0.41	0.03	0.41	0.41	0.04	0.20	0.20	0.06	0.22	0.22
Sat Flow, veh/h	1774	1555	262	1774	1666	167	1774	1465	338	1774	751	945
Grp Volume(v), veh/h	32	0	361	28	0	615	41	0	64	84	0	307
Grp Sat Flow(s),veh/h/ln	1774	0	1817	1774	0	1833	1774	0	1803	1774	0	1696
Q Serve(g_s), s	0.7	0.0	10.4	0.6	0.0	21.2	1.3	0.0	2.1	2.6	0.0	12.3
Cycle Q Clear(g_c), s	0.7	0.0	10.4	0.6	0.0	21.2	1.3	0.0	2.1	2.6	0.0	12.3
Prop In Lane	1.00		0.14	1.00		0.09	1.00		0.19	1.00		0.56
Lane Grp Cap(c), veh/h	246	0	745	423	0	746	217	0	357	428	0	367
V/C Ratio(X)	0.13	0.00	0.48	0.07	0.00	0.82	0.19	0.00	0.18	0.20	0.00	0.84
Avail Cap(c_a), veh/h	316	0	988	497	0	997	278	0	484	472	0	469
HCM Platoon Ratio	1.00	1.00	1.00	1.00	1.00	1.00	1.00	1.00	1.00	1.00	1.00	1.00
Upstream Filter(I)	1.00	0.00	1.00	1.00	0.00	1.00	1.00	0.00	1.00	1.00	0.00	1.00
Uniform Delay (d), s/veh	14.6	0.0	15.4	12.2	0.0	18.8	22.0	0.0	23.6	20.7	0.0	26.6
Incr Delay (d2), s/veh	0.2	0.0	0.5	0.1	0.0	4.3	0.4	0.0	0.2	0.2	0.0	10.2
Initial Q Delay(d3),s/veh	0.0	0.0	0.0	0.0	0.0	0.0	0.0	0.0	0.0	0.0	0.0	0.0
%ile BackOfQ(50%),veh/ln	0.4	0.0	5.2	0.3	0.0	11.5	0.6	0.0	1.1	1.3	0.0	6.7
LnGrp Delay(d),s/veh	14.9	0.0	15.9	12.2	0.0	23.1	22.4	0.0	23.8	20.9	0.0	36.7
LnGrp LOS	B		B	B		C	C		C	C		D
Approach Vol, veh/h		393			643			105			391	
Approach Delay, s/veh		15.8			22.6			23.3			33.3	
Approach LOS		B			C			C			C	

Timer	1	2	3	4	5	6	7	8
Assigned Phs	1	2	3	4	5	6	7	8
Phs Duration (G+Y+Rc), s	7.5	34.4	8.2	20.7	7.7	34.2	9.4	19.4
Change Period (Y+Rc), s	5.4	5.4	5.4	5.4	5.4	5.4	5.4	5.4
Max Green Setting (Gmax), s	5.1	38.5	5.2	19.6	5.1	38.5	5.8	19.0
Max Q Clear Time (g_c+I1), s	2.6	12.4	3.3	14.3	2.7	23.2	4.6	4.1
Green Ext Time (p_c), s	0.0	6.9	0.0	1.0	0.0	5.6	0.0	2.0

Intersection Summary	
HCM 2010 Ctrl Delay	23.6
HCM 2010 LOS	C

Movement	EBL	EBT	EBR	WBL	WBT	WBR	NBL	NBT	NBR	SBL	SBT	SBR
Lane Configurations												
Traffic Volume (veh/h)	32	280	63	332	430	21	55	174	29	32	493	69
Future Volume (veh/h)	32	280	63	332	430	21	55	174	29	32	493	69
Number	5	2	12	1	6	16	3	8	18	7	4	14
Initial Q (Qb), veh	0	0	0	0	0	0	0	0	0	0	0	0
Ped-Bike Adj(A_pbT)	1.00		1.00	1.00		1.00	1.00		1.00	1.00		1.00
Parking Bus, Adj	1.00	1.00	1.00	1.00	1.00	1.00	1.00	1.00	1.00	1.00	1.00	1.00
Adj Sat Flow, veh/h/ln	1863	1863	1900	1863	1863	1900	1863	1863	1900	1863	1863	1900
Adj Flow Rate, veh/h	40	326	95	382	524	30	64	200	36	48	560	84
Adj No. of Lanes	1	1	0	1	1	0	1	1	0	1	1	0
Peak Hour Factor	0.80	0.86	0.66	0.87	0.82	0.71	0.86	0.87	0.81	0.67	0.88	0.82
Percent Heavy Veh, %	2	2	2	2	2	2	2	2	2	2	2	2
Cap, veh/h	239	342	100	405	702	40	126	542	98	411	553	83
Arrive On Green	0.03	0.25	0.25	0.19	0.40	0.40	0.04	0.35	0.35	0.03	0.35	0.35
Sat Flow, veh/h	1774	1387	404	1774	1745	100	1774	1537	277	1774	1583	238
Grp Volume(v), veh/h	40	0	421	382	0	554	64	0	236	48	0	644
Grp Sat Flow(s),veh/h/ln	1774	0	1791	1774	0	1845	1774	0	1814	1774	0	1821
Q Serve(g_s), s	2.0	0.0	27.6	20.2	0.0	30.6	2.7	0.0	11.5	2.0	0.0	41.6
Cycle Q Clear(g_c), s	2.0	0.0	27.6	20.2	0.0	30.6	2.7	0.0	11.5	2.0	0.0	41.6
Prop In Lane	1.00		0.23	1.00		0.05	1.00		0.15	1.00		0.13
Lane Grp Cap(c), veh/h	239	0	442	405	0	742	126	0	639	411	0	636
V/C Ratio(X)	0.17	0.00	0.95	0.94	0.00	0.75	0.51	0.00	0.37	0.12	0.00	1.01
Avail Cap(c_a), veh/h	260	0	442	405	0	742	138	0	639	428	0	636
HCM Platoon Ratio	1.00	1.00	1.00	1.00	1.00	1.00	1.00	1.00	1.00	1.00	1.00	1.00
Upstream Filter(I)	1.00	0.00	1.00	1.00	0.00	1.00	1.00	0.00	1.00	1.00	0.00	1.00
Uniform Delay (d), s/veh	32.5	0.0	44.2	32.8	0.0	30.5	30.6	0.0	28.7	23.9	0.0	38.8
Incr Delay (d2), s/veh	0.3	0.0	31.0	30.4	0.0	4.2	3.2	0.0	0.4	0.1	0.0	39.1
Initial Q Delay(d3),s/veh	0.0	0.0	0.0	0.0	0.0	0.0	0.0	0.0	0.0	0.0	0.0	0.0
%ile BackOfQ(50%),veh/ln	1.0	0.0	17.5	15.7	0.0	16.4	1.4	0.0	5.8	1.0	0.0	27.7
LnGrp Delay(d),s/veh	32.8	0.0	75.2	63.2	0.0	34.6	33.7	0.0	29.1	24.0	0.0	77.9
LnGrp LOS	C		E	E		C	C		C	C		F
Approach Vol, veh/h		461			936			300			692	
Approach Delay, s/veh		71.5			46.3			30.1			74.1	
Approach LOS		E			D			C			E	

Timer	1	2	3	4	5	6	7	8
Assigned Phs	1	2	3	4	5	6	7	8
Phs Duration (G+Y+Rc), s	27.6	34.8	9.8	47.0	9.1	53.3	9.4	47.4
Change Period (Y+Rc), s	5.4	5.4	5.4	5.4	5.4	5.4	5.4	5.4
Max Green Setting (Gmax), s	22.2	29.4	5.2	41.6	5.1	46.5	5.1	41.7
Max Q Clear Time (g_c+I1), s	22.2	29.6	4.7	43.6	4.0	32.6	4.0	13.5
Green Ext Time (p_c), s	0.0	0.0	0.0	0.0	0.0	5.3	0.0	6.7

Intersection Summary	
HCM 2010 Ctrl Delay	57.2
HCM 2010 LOS	E

Movement	EBL	EBT	EBR	WBL	WBT	WBR	NBL	NBT	NBR	SBL	SBT	SBR
Lane Configurations												
Traffic Volume (veh/h)	55	76	17	3	322	119	18	20	7	208	144	552
Future Volume (veh/h)	55	76	17	3	322	119	18	20	7	208	144	552
Number	5	2	12	1	6	16	3	8	18	7	4	14
Initial Q (Qb), veh	0	0	0	0	0	0	0	0	0	0	0	0
Ped-Bike Adj(A_pbT)	1.00		1.00	1.00		1.00	1.00		1.00	1.00		1.00
Parking Bus, Adj	1.00	1.00	1.00	1.00	1.00	1.00	1.00	1.00	1.00	1.00	1.00	1.00
Adj Sat Flow, veh/h/ln	1863	1863	1900	1863	1863	1900	1863	1863	1900	1863	1863	1863
Adj Flow Rate, veh/h	77	141	28	4	383	157	24	24	9	229	178	627
Adj No. of Lanes	1	1	0	1	1	0	1	1	0	1	1	1
Peak Hour Factor	0.71	0.54	0.61	0.75	0.84	0.76	0.75	0.83	0.75	0.91	0.81	0.88
Percent Heavy Veh, %	2	2	2	2	2	2	2	2	2	2	2	2
Cap, veh/h	232	627	124	525	522	214	353	571	214	686	823	700
Arrive On Green	0.42	0.42	0.42	0.42	0.42	0.42	0.44	0.44	0.44	0.44	0.44	0.44
Sat Flow, veh/h	862	1510	300	1211	1257	515	674	1293	485	1370	1863	1583
Grp Volume(v), veh/h	77	0	169	4	0	540	24	0	33	229	178	627
Grp Sat Flow(s),veh/h/ln	862	0	1810	1211	0	1772	674	0	1777	1370	1863	1583
Q Serve(g_s), s	6.2	0.0	4.5	0.2	0.0	19.4	1.7	0.0	0.8	8.6	4.5	27.6
Cycle Q Clear(g_c), s	25.6	0.0	4.5	4.7	0.0	19.4	6.2	0.0	0.8	9.4	4.5	27.6
Prop In Lane	1.00		0.17	1.00		0.29	1.00		0.27	1.00		1.00
Lane Grp Cap(c), veh/h	232	0	751	525	0	735	353	0	785	686	823	700
V/C Ratio(X)	0.33	0.00	0.22	0.01	0.00	0.73	0.07	0.00	0.04	0.33	0.22	0.90
Avail Cap(c_a), veh/h	315	0	925	642	0	906	418	0	956	818	1002	851
HCM Platoon Ratio	1.00	1.00	1.00	1.00	1.00	1.00	1.00	1.00	1.00	1.00	1.00	1.00
Upstream Filter(I)	1.00	0.00	1.00	1.00	0.00	1.00	1.00	0.00	1.00	1.00	1.00	1.00
Uniform Delay (d), s/veh	29.3	0.0	14.2	15.8	0.0	18.6	14.9	0.0	12.0	14.7	13.0	19.5
Incr Delay (d2), s/veh	0.8	0.0	0.2	0.0	0.0	2.4	0.1	0.0	0.0	0.3	0.1	10.6
Initial Q Delay(d3),s/veh	0.0	0.0	0.0	0.0	0.0	0.0	0.0	0.0	0.0	0.0	0.0	0.0
%ile BackOfQ(50%),veh/ln	1.5	0.0	2.3	0.1	0.0	9.9	0.3	0.0	0.4	3.3	2.3	14.1
LnGrp Delay(d),s/veh	30.2	0.0	14.4	15.8	0.0	21.0	15.0	0.0	12.0	14.9	13.1	30.1
LnGrp LOS	C		B	B		C	B		B	B	B	C
Approach Vol, veh/h		246			544			57			1034	
Approach Delay, s/veh		19.3			21.0			13.3			23.8	
Approach LOS		B			C			B			C	

Timer	1	2	3	4	5	6	7	8
Assigned Phs		2		4		6		8
Phs Duration (G+Y+Rc), s		36.7		38.8		36.7		38.8
Change Period (Y+Rc), s		5.4		5.4		5.4		5.4
Max Green Setting (Gmax), s		38.6		40.6		38.6		40.6
Max Q Clear Time (g_c+I1), s		27.6		29.6		21.4		8.2
Green Ext Time (p_c), s		3.7		3.7		4.7		5.2

Intersection Summary	
HCM 2010 Ctrl Delay	22.1
HCM 2010 LOS	C

Movement	EBL	EBT	EBR	WBL	WBT	WBR	NBL	NBT	NBR	SBL	SBT	SBR
Lane Configurations												
Traffic Volume (veh/h)	61	52	184	100	130	4	142	437	29	2	501	126
Future Volume (veh/h)	61	52	184	100	130	4	142	437	29	2	501	126
Number	5	2	12	1	6	16	3	8	18	7	4	14
Initial Q (Qb), veh	0	0	0	0	0	0	0	0	0	0	0	0
Ped-Bike Adj(A_pbT)	1.00		1.00	1.00		1.00	1.00		1.00	1.00		1.00
Parking Bus, Adj	1.00	1.00	1.00	1.00	1.00	1.00	1.00	1.00	1.00	1.00	1.00	1.00
Adj Sat Flow, veh/h/ln	1863	1863	1900	1863	1863	1900	1863	1863	1900	1863	1863	1900
Adj Flow Rate, veh/h	90	65	214	120	160	12	197	497	44	4	626	140
Adj No. of Lanes	1	1	0	1	1	0	1	1	0	1	1	0
Peak Hour Factor	0.68	0.80	0.86	0.83	0.81	0.33	0.72	0.88	0.66	0.50	0.80	0.90
Percent Heavy Veh, %	2	2	2	2	2	2	2	2	2	2	2	2
Cap, veh/h	290	65	214	190	298	22	246	872	77	363	653	146
Arrive On Green	0.06	0.17	0.17	0.06	0.17	0.17	0.08	0.52	0.52	0.01	0.44	0.44
Sat Flow, veh/h	1774	382	1258	1774	1712	128	1774	1687	149	1774	1475	330
Grp Volume(v), veh/h	90	0	279	120	0	172	197	0	541	4	0	766
Grp Sat Flow(s),veh/h/ln	1774	0	1641	1774	0	1840	1774	0	1836	1774	0	1805
Q Serve(g_s), s	3.6	0.0	14.9	4.9	0.0	7.5	5.0	0.0	17.7	0.1	0.0	36.0
Cycle Q Clear(g_c), s	3.6	0.0	14.9	4.9	0.0	7.5	5.0	0.0	17.7	0.1	0.0	36.0
Prop In Lane	1.00		0.77	1.00		0.07	1.00		0.08	1.00		0.18
Lane Grp Cap(c), veh/h	290	0	279	190	0	320	246	0	950	363	0	798
V/C Ratio(X)	0.31	0.00	1.00	0.63	0.00	0.54	0.80	0.00	0.57	0.01	0.00	0.96
Avail Cap(c_a), veh/h	293	0	279	190	0	320	278	0	950	455	0	816
HCM Platoon Ratio	1.00	1.00	1.00	1.00	1.00	1.00	1.00	1.00	1.00	1.00	1.00	1.00
Upstream Filter(I)	1.00	0.00	1.00	1.00	0.00	1.00	1.00	0.00	1.00	1.00	0.00	1.00
Uniform Delay (d), s/veh	27.9	0.0	36.3	29.0	0.0	33.0	19.5	0.0	14.5	14.1	0.0	23.6
Incr Delay (d2), s/veh	0.6	0.0	53.6	6.6	0.0	1.8	13.8	0.0	0.8	0.0	0.0	21.9
Initial Q Delay(d3),s/veh	0.0	0.0	0.0	0.0	0.0	0.0	0.0	0.0	0.0	0.0	0.0	0.0
%ile BackOfQ(50%),veh/ln	1.8	0.0	10.8	2.7	0.0	3.9	3.4	0.0	9.1	0.1	0.0	22.7
LnGrp Delay(d),s/veh	28.5	0.0	89.9	35.7	0.0	34.7	33.3	0.0	15.3	14.1	0.0	45.5
LnGrp LOS	C		F	D		C	C		B	B		D
Approach Vol, veh/h		369			292			738			770	
Approach Delay, s/veh		74.9			35.1			20.1			45.4	
Approach LOS		E			D			C			D	

Timer	1	2	3	4	5	6	7	8
Assigned Phs	1	2	3	4	5	6	7	8
Phs Duration (G+Y+Rc), s	10.7	20.3	12.4	44.1	10.4	20.6	5.9	50.7
Change Period (Y+Rc), s	5.4	5.4	5.4	5.4	5.4	5.4	5.4	5.4
Max Green Setting (Gmax), s	5.3	14.9	8.6	39.6	5.1	15.1	5.0	43.2
Max Q Clear Time (g_c+I1), s	6.9	16.9	7.0	38.0	5.6	9.5	2.1	19.7
Green Ext Time (p_c), s	0.0	0.0	0.1	0.7	0.0	1.3	0.0	10.4

Intersection Summary	
HCM 2010 Ctrl Delay	40.4
HCM 2010 LOS	D

Movement	EBL	EBT	EBR	WBL	WBT	WBR	NBL	NBT	NBR	SBL	SBT	SBR
Lane Configurations												
Traffic Volume (veh/h)	20	850	130	80	1850	20	0	0	60	10	10	10
Future Volume (veh/h)	20	850	130	80	1850	20	0	0	60	10	10	10
Number	5	2	12	1	6	16	3	8	18	7	4	14
Initial Q (Qb), veh	0	0	0	0	0	0	0	0	0	0	0	0
Ped-Bike Adj(A_pbT)	1.00		1.00	1.00		1.00	1.00		1.00	1.00		1.00
Parking Bus, Adj	1.00	1.00	1.00	1.00	1.00	1.00	1.00	1.00	1.00	1.00	1.00	1.00
Adj Sat Flow, veh/h/ln	1863	1863	1900	1863	1863	1900	0	1863	1900	1900	1863	1863
Adj Flow Rate, veh/h	22	924	141	87	2011	22	0	0	65	11	11	11
Adj No. of Lanes	1	2	0	1	2	0	0	1	0	0	1	1
Peak Hour Factor	0.92	0.92	0.92	0.92	0.92	0.92	0.92	0.92	0.92	0.92	0.92	0.92
Percent Heavy Veh, %	2	2	2	2	2	2	0	2	2	2	2	2
Cap, veh/h	205	2693	411	480	2936	32	0	0	85	46	33	85
Arrive On Green	0.04	1.00	1.00	0.82	0.82	0.82	0.00	0.00	0.05	0.05	0.05	0.05
Sat Flow, veh/h	1774	3080	470	528	3586	39	0	0	1583	188	624	1583
Grp Volume(v), veh/h	22	531	534	87	990	1043	0	0	65	22	0	11
Grp Sat Flow(s),veh/h/ln	1774	1770	1780	528	1770	1856	0	0	1583	811	0	1583
Q Serve(g_s), s	0.3	0.0	0.0	5.4	34.6	34.9	0.0	0.0	6.1	0.1	0.0	1.0
Cycle Q Clear(g_c), s	0.3	0.0	0.0	5.4	34.6	34.9	0.0	0.0	6.1	6.1	0.0	1.0
Prop In Lane	1.00		0.26	1.00		0.02	0.00		1.00	0.50		1.00
Lane Grp Cap(c), veh/h	205	1548	1557	480	1449	1519	0	0	85	79	0	85
V/C Ratio(X)	0.11	0.34	0.34	0.18	0.68	0.69	0.00	0.00	0.77	0.28	0.00	0.13
Avail Cap(c_a), veh/h	236	1548	1557	480	1449	1519	0	0	91	85	0	91
HCM Platoon Ratio	2.00	2.00	2.00	1.00	1.00	1.00	1.00	1.00	1.00	1.00	1.00	1.00
Upstream Filter(I)	0.91	0.91	0.91	0.27	0.27	0.27	0.00	0.00	1.00	1.00	0.00	1.00
Uniform Delay (d), s/veh	6.6	0.0	0.0	3.0	5.6	5.6	0.0	0.0	70.1	68.1	0.0	67.7
Incr Delay (d2), s/veh	0.2	0.6	0.6	0.2	0.7	0.7	0.0	0.0	30.3	1.9	0.0	0.7
Initial Q Delay(d3),s/veh	0.0	0.0	0.0	0.0	0.0	0.0	0.0	0.0	0.0	0.0	0.0	0.0
%ile BackOfQ(50%),veh/ln	0.3	0.2	0.2	0.8	16.8	18.0	0.0	0.0	3.4	0.9	0.0	0.9
LnGrp Delay(d),s/veh	6.8	0.6	0.6	3.2	6.3	6.3	0.0	0.0	100.4	69.9	0.0	68.4
LnGrp LOS	A	A	A	A	A	A			F	E		E
Approach Vol, veh/h		1087			2120			65			33	
Approach Delay, s/veh		0.7			6.2			100.4			69.4	
Approach LOS		A			A			F			E	

Timer	1	2	3	4	5	6	7	8
Assigned Phs		2		4	5	6		8
Phs Duration (G+Y+Rc), s		136.6		13.4	8.4	128.2		13.4
Change Period (Y+Rc), s		5.4		5.4	5.4	5.4		5.4
Max Green Setting (Gmax), s		130.6		8.6	5.6	119.6		8.6
Max Q Clear Time (g_c+I1), s		2.0		8.1	2.3	36.9		8.1
Green Ext Time (p_c), s		78.5		0.0	0.0	59.3		0.0

Intersection Summary	
HCM 2010 Ctrl Delay	6.9
HCM 2010 LOS	A

Movement	EBL	EBT	EBR	WBL	WBT	WBR	NBL	NBT	NBR	SBL	SBT	SBR
Lane Configurations												
Traffic Volume (veh/h)	70	810	70	130	1640	90	190	130	130	60	10	20
Future Volume (veh/h)	70	810	70	130	1640	90	190	130	130	60	10	20
Number	5	2	12	1	6	16	3	8	18	7	4	14
Initial Q (Qb), veh	0	0	0	0	0	0	0	0	0	0	0	0
Ped-Bike Adj(A_pbT)	1.00		1.00	1.00		1.00	1.00		1.00	1.00		1.00
Parking Bus, Adj	1.00	1.00	1.00	1.00	1.00	1.00	1.00	1.00	1.00	1.00	1.00	1.00
Adj Sat Flow, veh/h/ln	1863	1863	1900	1863	1863	1900	1863	1863	1863	1863	1863	1863
Adj Flow Rate, veh/h	76	880	76	141	1783	98	207	141	141	65	11	22
Adj No. of Lanes	1	2	0	1	2	0	1	1	1	1	1	1
Peak Hour Factor	0.92	0.92	0.92	0.92	0.92	0.92	0.92	0.92	0.92	0.92	0.92	0.92
Percent Heavy Veh, %	2	2	2	2	2	2	2	2	2	2	2	2
Cap, veh/h	176	2172	188	505	2277	124	305	211	243	162	62	103
Arrive On Green	0.06	1.00	1.00	0.04	0.67	0.67	0.12	0.11	0.11	0.04	0.03	0.03
Sat Flow, veh/h	1774	3297	285	1774	3413	186	1774	1863	1583	1774	1863	1583
Grp Volume(v), veh/h	76	472	484	141	917	964	207	141	141	65	11	22
Grp Sat Flow(s),veh/h/ln	1774	1770	1812	1774	1770	1830	1774	1863	1583	1774	1863	1583
Q Serve(g_s), s	2.1	0.0	0.0	3.9	53.8	55.5	16.4	10.9	12.4	5.3	0.9	2.0
Cycle Q Clear(g_c), s	2.1	0.0	0.0	3.9	53.8	55.5	16.4	10.9	12.4	5.3	0.9	2.0
Prop In Lane	1.00		0.16	1.00		0.10	1.00		1.00	1.00		1.00
Lane Grp Cap(c), veh/h	176	1166	1194	505	1180	1221	305	211	243	162	62	103
V/C Ratio(X)	0.43	0.41	0.41	0.28	0.78	0.79	0.68	0.67	0.58	0.40	0.18	0.21
Avail Cap(c_a), veh/h	221	1166	1194	568	1180	1221	329	245	272	162	71	111
HCM Platoon Ratio	2.00	2.00	2.00	1.00	1.00	1.00	1.00	1.00	1.00	1.00	1.00	1.00
Upstream Filter(I)	0.89	0.89	0.89	0.69	0.69	0.69	1.00	1.00	1.00	1.00	1.00	1.00
Uniform Delay (d), s/veh	20.9	0.0	0.0	7.4	17.3	17.6	58.5	63.8	59.0	66.3	70.5	66.5
Incr Delay (d2), s/veh	1.5	0.9	0.9	0.2	3.5	3.7	5.0	5.6	2.5	1.6	1.3	1.0
Initial Q Delay(d3),s/veh	0.0	0.0	0.0	0.0	0.0	0.0	0.0	0.0	0.0	0.0	0.0	0.0
%ile BackOfQ(50%),veh/ln	1.6	0.3	0.3	1.9	27.2	29.1	8.4	5.9	5.6	2.6	0.5	0.9
LnGrp Delay(d),s/veh	22.4	0.9	0.9	7.6	20.8	21.2	63.5	69.4	61.5	67.9	71.8	67.5
LnGrp LOS	C	A	A	A	C	C	E	E	E	E	E	E
Approach Vol, veh/h		1032			2022			489			98	
Approach Delay, s/veh		2.5			20.1			64.6			68.2	
Approach LOS		A			C			E			E	

Timer	1	2	3	4	5	6	7	8
Assigned Phs	1	2	3	4	5	6	7	8
Phs Duration (G+Y+Rc), s	11.4	104.2	24.0	10.4	10.2	105.5	12.0	22.4
Change Period (Y+Rc), s	5.4	5.4	5.4	5.4	5.4	5.4	5.4	5.4
Max Green Setting (Gmax), s	11.4	90.7	20.6	5.7	8.6	93.5	6.6	19.7
Max Q Clear Time (g_c+I1), s	5.9	2.0	18.4	4.0	4.1	57.5	7.3	14.4
Green Ext Time (p_c), s	0.1	49.5	0.1	0.2	0.0	27.5	0.0	0.6

Intersection Summary	
HCM 2010 Ctrl Delay	22.4
HCM 2010 LOS	C

Movement	EBL	EBT	WBT	WBR	SBL	SBR
Lane Configurations						
Traffic Volume (veh/h)	180	1670	2620	460	280	70
Future Volume (veh/h)	180	1670	2620	460	280	70
Number	5	2	6	16	7	14
Initial Q (Qb), veh	0	0	0	0	0	0
Ped-Bike Adj(A_pbT)	1.00			1.00	1.00	1.00
Parking Bus, Adj	1.00	1.00	1.00	1.00	1.00	1.00
Adj Sat Flow, veh/h/ln	1863	1863	1863	1900	1863	1863
Adj Flow Rate, veh/h	196	1815	2848	500	304	76
Adj No. of Lanes	1	3	3	0	2	1
Peak Hour Factor	0.92	0.92	0.92	0.92	0.92	0.92
Percent Heavy Veh, %	2	2	2	2	2	2
Cap, veh/h	215	4205	3068	510	348	160
Arrive On Green	0.19	1.00	0.70	0.70	0.10	0.10
Sat Flow, veh/h	1774	5253	4562	730	3442	1583
Grp Volume(v), veh/h	196	1815	2161	1187	304	76
Grp Sat Flow(s),veh/h/ln	1774	1695	1695	1734	1721	1583
Q Serve(g_s), s	11.9	0.0	79.5	98.3	13.1	6.8
Cycle Q Clear(g_c), s	11.9	0.0	79.5	98.3	13.1	6.8
Prop In Lane	1.00			0.42	1.00	1.00
Lane Grp Cap(c), veh/h	215	4205	2367	1211	348	160
V/C Ratio(X)	0.91	0.43	0.91	0.98	0.87	0.48
Avail Cap(c_a), veh/h	225	4205	2367	1211	358	165
HCM Platoon Ratio	2.00	2.00	1.00	1.00	1.00	1.00
Upstream Filter(I)	0.89	0.89	1.00	1.00	1.00	1.00
Uniform Delay (d), s/veh	51.2	0.0	18.8	21.7	66.5	63.7
Incr Delay (d2), s/veh	33.4	0.3	6.8	21.6	20.3	2.2
Initial Q Delay(d3),s/veh	0.0	0.0	0.0	0.0	0.0	0.0
%ile BackOfQ(50%),veh/ln	9.8	0.1	39.1	53.8	7.2	6.1
LnGrp Delay(d),s/veh	84.6	0.3	25.6	43.3	86.8	65.9
LnGrp LOS	F	A	C	D	F	E
Approach Vol, veh/h		2011	3348		380	
Approach Delay, s/veh		8.5	31.9		82.6	
Approach LOS		A	C		F	

Timer	1	2	3	4	5	6	7	8
Assigned Phs		2		4	5	6		
Phs Duration (G+Y+Rc), s		129.4		20.6	19.3	110.1		
Change Period (Y+Rc), s		5.4		5.4	5.4	5.4		
Max Green Setting (Gmax), s		123.6		15.6	14.8	103.4		
Max Q Clear Time (g_c+I1), s		2.0		15.1	13.9	100.3		
Green Ext Time (p_c), s		118.7		0.1	0.1	3.1		

Intersection Summary	
HCM 2010 Ctrl Delay	27.0
HCM 2010 LOS	C

Movement	EBT	EBR	WBL	WBT	NBL	NBR
Lane Configurations						
Traffic Volume (veh/h)	1650	70	50	2640	10	110
Future Volume (veh/h)	1650	70	50	2640	10	110
Number	2	12	1	6	3	18
Initial Q (Qb), veh	0	0	0	0	0	0
Ped-Bike Adj(A_pbT)		1.00	1.00		1.00	1.00
Parking Bus, Adj	1.00	1.00	1.00	1.00	1.00	1.00
Adj Sat Flow, veh/h/ln	1863	1900	1863	1863	1863	1863
Adj Flow Rate, veh/h	1793	76	54	2870	11	120
Adj No. of Lanes	3	0	1	3	1	2
Peak Hour Factor	0.92	0.92	0.92	0.92	0.92	0.92
Percent Heavy Veh, %	2	2	2	2	2	2
Cap, veh/h	4033	171	297	4434	100	156
Arrive On Green	1.00	1.00	0.03	0.87	0.06	0.06
Sat Flow, veh/h	5171	212	1774	5253	1774	2787
Grp Volume(v), veh/h	1214	655	54	2870	11	120
Grp Sat Flow(s),veh/h/ln	1695	1825	1774	1695	1774	1393
Q Serve(g_s), s	0.0	0.0	0.7	24.9	0.9	6.4
Cycle Q Clear(g_c), s	0.0	0.0	0.7	24.9	0.9	6.4
Prop In Lane		0.12	1.00		1.00	1.00
Lane Grp Cap(c), veh/h	2733	1471	297	4434	100	156
V/C Ratio(X)	0.44	0.45	0.18	0.65	0.11	0.77
Avail Cap(c_a), veh/h	2733	1471	358	4434	125	197
HCM Platoon Ratio	2.00	2.00	1.00	1.00	1.00	1.00
Upstream Filter(I)	0.86	0.86	0.21	0.21	1.00	1.00
Uniform Delay (d), s/veh	0.0	0.0	1.8	2.8	67.2	69.8
Incr Delay (d2), s/veh	0.5	0.8	0.1	0.2	0.5	13.1
Initial Q Delay(d3),s/veh	0.0	0.0	0.0	0.0	0.0	0.0
%ile BackOfQ(50%),veh/ln	0.2	0.3	0.3	11.5	0.4	2.7
LnGrp Delay(d),s/veh	0.5	0.8	1.8	3.0	67.7	82.9
LnGrp LOS	A	A	A	A	E	F
Approach Vol, veh/h	1869			2924	131	
Approach Delay, s/veh	0.6			3.0	81.7	
Approach LOS	A			A	F	

Timer	1	2	3	4	5	6	7	8
Assigned Phs	1	2				6		8
Phs Duration (G+Y+Rc), s	9.9	126.3				136.2		13.8
Change Period (Y+Rc), s	5.4	5.4				5.4		5.4
Max Green Setting (Gmax), s	9.6	113.6				128.6		10.6
Max Q Clear Time (g_c+I1), s	2.7	2.0				26.9		8.4
Green Ext Time (p_c), s	0.0	106.3				97.3		0.1

Intersection Summary	
HCM 2010 Ctrl Delay	4.2
HCM 2010 LOS	A

HCM 2010 analysis supports speed limit in the range of 25 and 55 mph

Movement	EBL	EBT	WBT	WBR	SBL	SBR
Lane Configurations						
Traffic Volume (veh/h)	160	1410	2350	120	70	50
Future Volume (veh/h)	160	1410	2350	120	70	50
Number	5	2	6	16	7	14
Initial Q (Qb), veh	0	0	0	0	0	0
Ped-Bike Adj(A_pbT)	1.00			1.00	1.00	1.00
Parking Bus, Adj	1.00	1.00	1.00	1.00	1.00	1.00
Adj Sat Flow, veh/h/ln	1863	1863	1863	1900	1863	1863
Adj Flow Rate, veh/h	174	1533	2554	130	76	54
Adj No. of Lanes	1	3	3	0	1	1
Peak Hour Factor	0.92	0.92	0.92	0.92	0.92	0.92
Percent Heavy Veh, %	2	2	2	2	2	2
Cap, veh/h	199	4433	3889	196	100	89
Arrive On Green	0.05	0.87	0.78	0.78	0.06	0.06
Sat Flow, veh/h	1774	5253	5127	250	1774	1583
Grp Volume(v), veh/h	174	1533	1737	947	76	54
Grp Sat Flow(s),veh/h/ln	1774	1695	1695	1819	1774	1583
Q Serve(g_s), s	5.4	8.3	34.0	35.2	6.3	5.0
Cycle Q Clear(g_c), s	5.4	8.3	34.0	35.2	6.3	5.0
Prop In Lane	1.00			0.14	1.00	1.00
Lane Grp Cap(c), veh/h	199	4433	2659	1426	100	89
V/C Ratio(X)	0.87	0.35	0.65	0.66	0.76	0.61
Avail Cap(c_a), veh/h	367	4433	2659	1426	163	146
HCM Platoon Ratio	1.00	1.00	1.00	1.00	1.00	1.00
Upstream Filter(I)	1.00	1.00	0.57	0.57	1.00	1.00
Uniform Delay (d), s/veh	40.2	1.8	7.2	7.3	69.8	69.2
Incr Delay (d2), s/veh	11.2	0.2	0.3	0.7	11.3	6.5
Initial Q Delay(d3),s/veh	0.0	0.0	0.0	0.0	0.0	0.0
%ile BackOfQ(50%),veh/ln	7.7	3.9	15.8	17.6	3.4	4.5
LnGrp Delay(d),s/veh	51.4	2.0	7.5	8.0	81.0	75.6
LnGrp LOS	D	A	A	A	F	E
Approach Vol, veh/h		1707	2684		130	
Approach Delay, s/veh		7.0	7.7		78.8	
Approach LOS		A	A		E	

Timer	1	2	3	4	5	6	7	8
Assigned Phs		2		4	5	6		
Phs Duration (G+Y+Rc), s		136.2		13.8	13.1	123.0		
Change Period (Y+Rc), s		5.4		5.4	5.4	5.4		
Max Green Setting (Gmax), s		125.4		13.8	21.9	98.1		
Max Q Clear Time (g_c+I1), s		10.3		8.3	7.4	37.2		
Green Ext Time (p_c), s		102.1		0.1	0.4	57.1		

Intersection Summary	
HCM 2010 Ctrl Delay	9.5
HCM 2010 LOS	A

Movement	EBL	EBT	EBR	WBL	WBT	WBR	NBL	NBT	NBR	SBL	SBT	SBR
Lane Configurations												
Traffic Volume (veh/h)	90	720	90	210	1240	210	100	0	150	170	10	70
Future Volume (veh/h)	90	720	90	210	1240	210	100	0	150	170	10	70
Number	5	2	12	1	6	16	3	8	18	7	4	14
Initial Q (Qb), veh	0	0	0	0	0	0	0	0	0	0	0	0
Ped-Bike Adj(A_pbT)	1.00		1.00	1.00		1.00	1.00		1.00	1.00		1.00
Parking Bus, Adj	1.00	1.00	1.00	1.00	1.00	1.00	1.00	1.00	1.00	1.00	1.00	1.00
Adj Sat Flow, veh/h/ln	1863	1863	1900	1863	1863	1900	1900	1863	1900	1900	1863	1863
Adj Flow Rate, veh/h	98	783	98	228	1348	228	109	0	163	185	11	76
Adj No. of Lanes	1	2	0	1	2	0	0	2	0	0	1	1
Peak Hour Factor	0.92	0.92	0.92	0.92	0.92	0.92	0.92	0.92	0.92	0.92	0.92	0.92
Percent Heavy Veh, %	2	2	2	2	2	2	2	2	2	2	2	2
Cap, veh/h	183	1672	209	412	1708	286	114	0	419	281	14	460
Arrive On Green	0.04	0.53	0.53	0.07	0.56	0.56	0.29	0.00	0.29	0.29	0.29	0.29
Sat Flow, veh/h	1774	3166	396	1774	3035	508	226	0	1441	807	48	1583
Grp Volume(v), veh/h	98	438	443	228	780	796	109	0	163	196	0	76
Grp Sat Flow(s),veh/h/ln	1774	1770	1793	1774	1770	1773	226	0	1441	855	0	1583
Q Serve(g_s), s	3.8	23.3	23.3	8.6	51.7	53.4	7.5	0.0	13.6	22.5	0.0	5.4
Cycle Q Clear(g_c), s	3.8	23.3	23.3	8.6	51.7	53.4	43.6	0.0	13.6	36.1	0.0	5.4
Prop In Lane	1.00		0.22	1.00		0.29	1.00		1.00	0.94		1.00
Lane Grp Cap(c), veh/h	183	934	947	412	996	998	114	0	419	295	0	460
V/C Ratio(X)	0.53	0.47	0.47	0.55	0.78	0.80	0.96	0.00	0.39	0.66	0.00	0.17
Avail Cap(c_a), veh/h	240	934	947	534	996	998	114	0	419	295	0	460
HCM Platoon Ratio	1.00	1.00	1.00	1.00	1.00	1.00	1.00	1.00	1.00	1.00	1.00	1.00
Upstream Filter(I)	0.90	0.90	0.90	0.09	0.09	0.09	1.00	0.00	1.00	1.00	0.00	1.00
Uniform Delay (d), s/veh	26.0	22.2	22.2	16.2	25.6	26.0	72.7	0.0	42.6	57.0	0.0	39.6
Incr Delay (d2), s/veh	2.2	1.5	1.5	0.1	0.6	0.6	71.3	0.0	0.6	5.5	0.0	0.2
Initial Q Delay(d3),s/veh	0.0	0.0	0.0	0.0	0.0	0.0	0.0	0.0	0.0	0.0	0.0	0.0
%ile BackOfQ(50%),veh/ln	2.0	11.7	11.8	4.1	25.3	26.3	6.8	0.0	5.5	8.2	0.0	2.4
LnGrp Delay(d),s/veh	28.2	23.7	23.7	16.3	26.2	26.7	144.0	0.0	43.1	62.5	0.0	39.8
LnGrp LOS	C	C	C	B	C	C	F		D	E		D
Approach Vol, veh/h		979			1804			272			272	
Approach Delay, s/veh		24.2			25.1			83.5			56.1	
Approach LOS		C			C			F			E	

Timer	1	2	3	4	5	6	7	8
Assigned Phs	1	2		4	5	6		8
Phs Duration (G+Y+Rc), s	16.4	84.6		49.0	11.2	89.8		49.0
Change Period (Y+Rc), s	5.4	5.4		5.4	5.4	5.4		5.4
Max Green Setting (Gmax), s	21.3	68.9		43.6	10.6	79.6		43.6
Max Q Clear Time (g_c+I1), s	10.6	25.3		38.1	5.8	55.4		45.6
Green Ext Time (p_c), s	0.5	26.9		1.6	0.1	17.9		0.0

Intersection Summary	
HCM 2010 Ctrl Delay	32.2
HCM 2010 LOS	C

Movement	EBL	EBT	EBR	WBL	WBT	WBR	NBL	NBT	NBR	SBL	SBT	SBR
Lane Configurations												
Traffic Volume (veh/h)	80	600	80	200	940	200	20	100	130	130	100	20
Future Volume (veh/h)	80	600	80	200	940	200	20	100	130	130	100	20
Number	5	2	12	1	6	16	3	8	18	7	4	14
Initial Q (Qb), veh	0	0	0	0	0	0	0	0	0	0	0	0
Ped-Bike Adj(A_pbT)	1.00		1.00	1.00		1.00	1.00		1.00	1.00		1.00
Parking Bus, Adj	1.00	1.00	1.00	1.00	1.00	1.00	1.00	1.00	1.00	1.00	1.00	1.00
Adj Sat Flow, veh/h/ln	1863	1863	1900	1863	1863	1900	1863	1863	1900	1863	1863	1900
Adj Flow Rate, veh/h	87	652	87	217	1022	217	22	109	141	141	109	22
Adj No. of Lanes	1	2	0	1	2	0	1	1	0	1	1	0
Peak Hour Factor	0.92	0.92	0.92	0.92	0.92	0.92	0.92	0.92	0.92	0.92	0.92	0.92
Percent Heavy Veh, %	2	2	2	2	2	2	2	2	2	2	2	2
Cap, veh/h	264	1702	227	427	1676	355	290	124	160	212	339	68
Arrive On Green	0.01	0.18	0.18	0.07	0.58	0.58	0.02	0.17	0.17	0.08	0.23	0.23
Sat Flow, veh/h	1774	3140	418	1774	2908	616	1774	739	955	1774	1505	304
Grp Volume(v), veh/h	87	367	372	217	621	618	22	0	250	141	0	131
Grp Sat Flow(s),veh/h/ln	1774	1770	1789	1774	1770	1754	1774	0	1694	1774	0	1809
Q Serve(g_s), s	3.2	27.4	27.5	7.9	34.4	34.6	1.5	0.0	21.6	9.6	0.0	9.1
Cycle Q Clear(g_c), s	3.2	27.4	27.5	7.9	34.4	34.6	1.5	0.0	21.6	9.6	0.0	9.1
Prop In Lane	1.00		0.23	1.00		0.35	1.00		0.56	1.00		0.17
Lane Grp Cap(c), veh/h	264	959	970	427	1020	1011	290	0	284	212	0	407
V/C Ratio(X)	0.33	0.38	0.38	0.51	0.61	0.61	0.08	0.00	0.88	0.66	0.00	0.32
Avail Cap(c_a), veh/h	340	959	970	549	1020	1011	316	0	368	240	0	499
HCM Platoon Ratio	0.33	0.33	0.33	1.00	1.00	1.00	1.00	1.00	1.00	1.00	1.00	1.00
Upstream Filter(I)	0.96	0.96	0.96	0.61	0.61	0.61	1.00	0.00	1.00	1.00	0.00	1.00
Uniform Delay (d), s/veh	18.2	39.5	39.5	16.3	20.7	20.8	50.1	0.0	61.0	46.9	0.0	48.5
Incr Delay (d2), s/veh	0.7	1.1	1.1	0.6	1.6	1.7	0.1	0.0	17.5	5.7	0.0	0.5
Initial Q Delay(d3),s/veh	0.0	0.0	0.0	0.0	0.0	0.0	0.0	0.0	0.0	0.0	0.0	0.0
%ile BackOfQ(50%),veh/ln	1.6	13.8	14.0	3.9	17.2	17.1	0.8	0.0	11.5	5.0	0.0	4.6
LnGrp Delay(d),s/veh	18.9	40.6	40.6	16.8	22.4	22.5	50.2	0.0	78.5	52.6	0.0	49.0
LnGrp LOS	B	D	D	B	C	C	D		E	D		D
Approach Vol, veh/h		826			1456			272			272	
Approach Delay, s/veh		38.3			21.6			76.2			50.9	
Approach LOS		D			C			E			D	

Timer	1	2	3	4	5	6	7	8
Assigned Phs	1	2	3	4	5	6	7	8
Phs Duration (G+Y+Rc), s	15.7	86.7	8.4	39.2	10.6	91.8	17.0	30.5
Change Period (Y+Rc), s	5.4	5.4	5.4	5.4	5.4	5.4	5.4	5.4
Max Green Setting (Gmax), s	20.6	61.2	5.2	41.4	11.6	70.2	14.0	32.6
Max Q Clear Time (g_c+I1), s	9.9	29.5	3.5	11.1	5.2	36.6	11.6	23.6
Green Ext Time (p_c), s	0.4	16.5	0.0	2.5	0.1	17.0	0.1	1.5

Intersection Summary	
HCM 2010 Ctrl Delay	34.6
HCM 2010 LOS	C

Movement	EBT	EBR	WBL	WBT	NBL	NBR
Lane Configurations						
Traffic Volume (veh/h)	620	160	230	700	60	100
Future Volume (veh/h)	620	160	230	700	60	100
Number	2	12	1	6	3	18
Initial Q (Qb), veh	0	0	0	0	0	0
Ped-Bike Adj(A_pbT)		1.00	1.00		1.00	1.00
Parking Bus, Adj	1.00	1.00	1.00	1.00	1.00	1.00
Adj Sat Flow, veh/h/ln	1863	1900	1863	1863	1863	1863
Adj Flow Rate, veh/h	674	174	250	761	65	109
Adj No. of Lanes	2	0	1	2	1	1
Peak Hour Factor	0.92	0.92	0.92	0.92	0.92	0.92
Percent Heavy Veh, %	2	2	2	2	2	2
Cap, veh/h	2133	550	578	3002	142	200
Arrive On Green	0.77	0.77	0.05	0.85	0.08	0.08
Sat Flow, veh/h	2880	719	1774	3632	1774	1583
Grp Volume(v), veh/h	428	420	250	761	65	109
Grp Sat Flow(s),veh/h/ln	1770	1736	1774	1770	1774	1583
Q Serve(g_s), s	11.2	11.2	4.3	6.2	5.2	9.7
Cycle Q Clear(g_c), s	11.2	11.2	4.3	6.2	5.2	9.7
Prop In Lane		0.41	1.00		1.00	1.00
Lane Grp Cap(c), veh/h	1354	1329	578	3002	142	200
V/C Ratio(X)	0.32	0.32	0.43	0.25	0.46	0.54
Avail Cap(c_a), veh/h	1354	1329	951	3002	244	291
HCM Platoon Ratio	1.00	1.00	1.00	1.00	1.00	1.00
Upstream Filter(I)	1.00	1.00	0.72	0.72	1.00	1.00
Uniform Delay (d), s/veh	5.4	5.4	3.6	2.2	65.9	61.4
Incr Delay (d2), s/veh	0.6	0.6	0.4	0.0	2.3	2.3
Initial Q Delay(d3),s/veh	0.0	0.0	0.0	0.0	0.0	0.0
%ile BackOfQ(50%),veh/ln	5.7	5.6	2.1	3.0	2.7	4.4
LnGrp Delay(d),s/veh	6.1	6.1	4.0	2.2	68.2	63.7
LnGrp LOS	A	A	A	A	E	E
Approach Vol, veh/h	848			1011	174	
Approach Delay, s/veh	6.1			2.7	65.4	
Approach LOS	A			A	E	

Timer	1	2	3	4	5	6	7	8
Assigned Phs	1	2				6		8
Phs Duration (G+Y+Rc), s	12.4	120.2				132.6		17.4
Change Period (Y+Rc), s	5.4	5.4				5.4		5.4
Max Green Setting (Gmax), s	38.6	74.6				118.6		20.6
Max Q Clear Time (g_c+I1), s	6.3	13.2				8.2		11.7
Green Ext Time (p_c), s	0.7	15.2				15.8		0.3

Intersection Summary	
HCM 2010 Ctrl Delay	9.5
HCM 2010 LOS	A

Movement	EBL	EBT	EBR	WBL	WBT	WBR	NBL	NBT	NBR	SBL	SBT	SBR
Lane Configurations												
Traffic Volume (veh/h)	70	590	70	90	540	90	130	100	20	130	100	20
Future Volume (veh/h)	70	590	70	90	540	90	130	100	20	130	100	20
Number	5	2	12	1	6	16	3	8	18	7	4	14
Initial Q (Qb), veh	0	0	0	0	0	0	0	0	0	0	0	0
Ped-Bike Adj(A_pbT)	1.00		1.00	1.00		1.00	1.00		1.00	1.00		1.00
Parking Bus, Adj	1.00	1.00	1.00	1.00	1.00	1.00	1.00	1.00	1.00	1.00	1.00	1.00
Adj Sat Flow, veh/h/ln	1863	1863	1900	1863	1863	1900	1863	1863	1900	1863	1863	1900
Adj Flow Rate, veh/h	76	641	76	98	587	98	141	109	22	141	109	22
Adj No. of Lanes	1	1	0	1	1	0	1	1	0	1	1	0
Peak Hour Factor	0.92	0.92	0.92	0.92	0.92	0.92	0.92	0.92	0.92	0.92	0.92	0.92
Percent Heavy Veh, %	2	2	2	2	2	2	2	2	2	2	2	2
Cap, veh/h	387	987	117	368	940	157	322	341	69	322	341	69
Arrive On Green	0.60	0.60	0.60	0.60	0.60	0.60	0.23	0.23	0.23	0.23	0.23	0.23
Sat Flow, veh/h	754	1635	194	731	1557	260	1254	1505	304	1254	1505	304
Grp Volume(v), veh/h	76	0	717	98	0	685	141	0	131	141	0	131
Grp Sat Flow(s),veh/h/ln	754	0	1829	731	0	1817	1254	0	1809	1254	0	1809
Q Serve(g_s), s	4.5	0.0	16.3	6.4	0.0	15.2	6.7	0.0	3.8	6.7	0.0	3.8
Cycle Q Clear(g_c), s	19.8	0.0	16.3	22.7	0.0	15.2	10.6	0.0	3.8	10.6	0.0	3.8
Prop In Lane	1.00		0.11	1.00		0.14	1.00		0.17	1.00		0.17
Lane Grp Cap(c), veh/h	387	0	1104	368	0	1097	322	0	410	322	0	410
V/C Ratio(X)	0.20	0.00	0.65	0.27	0.00	0.62	0.44	0.00	0.32	0.44	0.00	0.32
Avail Cap(c_a), veh/h	603	0	1628	577	0	1618	483	0	643	483	0	643
HCM Platoon Ratio	1.00	1.00	1.00	1.00	1.00	1.00	1.00	1.00	1.00	1.00	1.00	1.00
Upstream Filter(I)	1.00	0.00	1.00	1.00	0.00	1.00	1.00	0.00	1.00	1.00	0.00	1.00
Uniform Delay (d), s/veh	14.3	0.0	8.2	15.6	0.0	8.0	24.9	0.0	20.5	24.9	0.0	20.5
Incr Delay (d2), s/veh	0.2	0.0	0.7	0.4	0.0	0.6	0.9	0.0	0.4	0.9	0.0	0.4
Initial Q Delay(d3),s/veh	0.0	0.0	0.0	0.0	0.0	0.0	0.0	0.0	0.0	0.0	0.0	0.0
%ile BackOfQ(50%),veh/ln	1.0	0.0	8.2	1.3	0.0	7.6	2.4	0.0	1.9	2.4	0.0	1.9
LnGrp Delay(d),s/veh	14.6	0.0	8.9	16.0	0.0	8.6	25.8	0.0	20.9	25.8	0.0	20.9
LnGrp LOS	B		A	B		A	C		C	C		C
Approach Vol, veh/h		793			783			272			272	
Approach Delay, s/veh		9.4			9.5			23.5			23.5	
Approach LOS		A			A			C			C	

Timer	1	2	3	4	5	6	7	8
Assigned Phs		2		4		6		8
Phs Duration (G+Y+Rc), s		43.8		19.8		43.8		19.8
Change Period (Y+Rc), s		5.4		5.4		5.4		5.4
Max Green Setting (Gmax), s		56.6		22.6		56.6		22.6
Max Q Clear Time (g_c+I1), s		21.8		12.6		24.7		12.6
Green Ext Time (p_c), s		14.2		1.8		13.7		1.8

Intersection Summary	
HCM 2010 Ctrl Delay	13.1
HCM 2010 LOS	B

Appendix F: SW 117th Avenue Traffic Analysis Information

Arterial Level of Service: EB SW 152nd St #5

Cross Street	Node	Delay (s/veh)	Travel time (s)	Dist (mi)	Arterial Speed
SW 152nd Ave	25	174.5	232.4	0.5	9
	64	4.3	13.2	0.1	26
	33	2.3	30.5	0.3	37
SW 147th Ave	24	6.1	14.6	0.1	25
SW 142nd Ave	23	173.2	226.4	0.5	8
Publix Entrance	22	294.2	412.1	0.4	4
SW 137th Ave	2	83.3	93.2	0.1	5
Total		737.8	1022.2	2.0	8

Arterial Level of Service: WB SW 152nd St #5

Cross Street	Node	Delay (s/veh)	Travel time (s)	Dist (mi)	Arterial Speed
Publix Entrance	22	5.5	17.0	0.1	25
	23	18.8	53.1	0.4	27
SW 147th Ave	24	15.3	58.0	0.5	31
	33	2.9	12.4	0.1	29
	64	31.1	59.0	0.3	19
SW 152nd Ave	25	42.1	73.7	0.1	7
SW 157th Ave	1	166.5	358.6	0.5	9
Total		282.3	631.9	2.0	16

Arterial Level of Service: EB SW 152nd St #4

Cross Street	Node	Delay (s/veh)	Travel time (s)	Dist (mi)	Arterial Speed
	41	5.0	19.9	0.2	29
SW 132nd Ave	21	3.4	22.7	0.2	36
SW 129th Ave	20	5.7	50.2	0.5	37
SW 127th Ave	3	21.0	50.1	0.3	23
SW 124th Ave	19	5.5	13.6	0.1	23
SW 122nd Ave	18	13.6	31.4	0.2	23
	83	90.5	118.5	0.3	10
	82	46.7	56.1	0.1	7
	81	29.3	33.4	0.0	4
SW 117th Ave	4	10.6	11.8	0.0	9
Total		231.3	407.6	2.0	18

Arterial Level of Service: WB SW 152nd St #4

Cross Street	Node	Delay (s/veh)	Travel time (s)	Dist (mi)	Arterial Speed
	81	3.5	6.7	0.0	16
	82	2.3	6.4	0.0	21
	83	1.1	10.8	0.1	35
SW 122nd Ave	18	15.5	42.2	0.3	27
SW 124th Ave	19	7.0	24.5	0.2	30
SW 127th Ave	3	17.4	25.6	0.1	12
SW 129th Ave	20	8.0	37.7	0.3	31
SW 132nd Ave	21	18.0	62.5	0.5	29
	41	9.8	31.5	0.2	26
SW 137th Ave	2	50.4	63.5	0.2	9
Total		132.9	311.4	2.0	23

Arterial Level of Service: EB SW 152nd St #3

Cross Street	Node	Delay (s/veh)	Travel time (s)	Dist (mi)	Arterial Speed
West Turnpike Ramp	5	5.9	18.3	0.1	27
East Turnpike Ramp	6	7.3	13.4	0.1	17
	63	8.7	21.6	0.2	27
SW 112th Ave	7	60.2	69.5	0.1	7
Total		82.0	122.8	0.5	14

Arterial Level of Service: WB SW 152nd St #3

Cross Street	Node	Delay (s/veh)	Travel time (s)	Dist (mi)	Arterial Speed
	63	33.3	44.4	0.1	11
East Turnpike Ramp	6	84.4	178.0	0.2	6
West Turnpike Ramp	5	63.9	69.4	0.1	3
SW 117th Ave	4	203.0	510.9	0.1	2
Total		384.6	802.8	0.5	4

Arterial Level of Service: EB SW 152nd St #2

Cross Street	Node	Delay (s/veh)	Travel time (s)	Dist (mi)	Arterial Speed
SW 107th Ave	8	8.1	48.8	0.5	38
SW 102nd Ave	17	17.1	55.4	0.5	33
SW 99th Ct	16	15.2	32.6	0.2	23
SW 93rd Ave	9	250.7	299.9	0.7	8
	79	43.7	48.0	0.1	4
	10	76.0	81.7	0.1	3
US 1 / S Dixie Hwy	11	56.2	58.6	0.0	3
Total		467.1	625.0	2.1	12

Arterial Level of Service: WB SW 152nd St #2

Cross Street	Node	Delay (s/veh)	Travel time (s)	Dist (mi)	Arterial Speed
SW 92nd Ave	10	4.4	9.9	0.0	16
	79	2.0	8.0	0.1	31
SW 93rd Ave	9	17.5	21.7	0.1	9
SW 99th Ct	16	6.4	57.5	0.7	42
SW 102nd Ave	17	15.6	32.1	0.2	24
SW 107th Ave	8	9.1	47.5	0.5	39
SW 112th Ave	7	91.6	130.9	0.5	14
Total		146.7	307.5	2.1	24

Arterial Level of Service: EB SW 152nd St #1

Cross Street	Node	Delay (s/veh)	Travel time (s)	Dist (mi)	Arterial Speed
	47	4.3	16.0	0.1	23
SW 87th Ave	12	9.7	42.3	0.4	31
SW 82nd Ave	13	27.2	77.0	0.5	24
SW 77th Ave	14	10.9	55.4	0.5	33
Old Cutler Rd	15	36.2	72.4	0.4	19
Total		88.3	263.2	1.9	26

Arterial Level of Service: WB SW 152nd St #1

Cross Street	Node	Delay (s/veh)	Travel time (s)	Dist (mi)	Arterial Speed
SW 77th Ave	14	8.3	36.4	0.4	37
SW 82nd Ave	13	25.3	69.4	0.5	27
SW 87th Ave	12	17.4	60.1	0.5	31
	47	6.5	43.1	0.4	30
US 1 / S Dixie Hwy	11	123.8	133.4	0.1	3
Total		181.3	342.5	1.9	20

Arterial Level of Service: EB SW 152nd St #5

Cross Street	Node	Delay (s/veh)	Travel time (s)	Dist (mi)	Arterial Speed
SW 152nd Ave	25	16.3	56.0	0.5	33
	64	3.4	12.3	0.1	28
	33	2.0	30.1	0.3	37
SW 147th Ave	24	5.4	14.0	0.1	26
SW 142nd Ave	23	17.7	60.5	0.5	29
Publix Entrance	22	15.5	48.9	0.4	29
SW 137th Ave	2	49.3	59.2	0.1	7
Total		109.7	280.9	2.0	26

Arterial Level of Service: WB SW 152nd St #5

Cross Street	Node	Delay (s/veh)	Travel time (s)	Dist (mi)	Arterial Speed
Publix Entrance	22	17.8	29.7	0.1	14
	23	22.9	57.0	0.4	25
SW 147th Ave	24	14.9	57.5	0.5	31
	33	3.0	12.5	0.1	29
	64	3.1	31.4	0.3	36
SW 152nd Ave	25	12.7	20.3	0.1	17
SW 157th Ave	1	32.1	76.0	0.5	24
Total		106.5	284.4	2.0	26

Arterial Level of Service: EB SW 152nd St #4

Cross Street	Node	Delay (s/veh)	Travel time (s)	Dist (mi)	Arterial Speed
	41	4.9	20.1	0.2	29
SW 132nd Ave	21	3.1	23.0	0.2	36
SW 129th Ave	20	7.9	52.4	0.5	35
SW 127th Ave	3	5.5	34.4	0.3	34
SW 124th Ave	19	4.7	12.8	0.1	25
SW 122nd Ave	18	6.3	24.1	0.2	30
	83	3.5	32.2	0.3	36
	82	17.1	26.6	0.1	14
	81	32.7	36.8	0.0	4
SW 117th Ave	4	11.9	13.1	0.0	8
Total		97.5	275.5	2.0	26

Arterial Level of Service: WB SW 152nd St #4

Cross Street	Node	Delay (s/veh)	Travel time (s)	Dist (mi)	Arterial Speed
	81	3.3	6.5	0.0	17
	82	2.5	6.5	0.0	20
	83	2.0	11.6	0.1	33
SW 122nd Ave	18	18.5	46.6	0.3	25
SW 124th Ave	19	7.9	25.7	0.2	28
SW 127th Ave	3	13.3	21.5	0.1	15
SW 129th Ave	20	10.9	40.6	0.3	29
SW 132nd Ave	21	182.9	225.0	0.5	8
	41	181.0	201.9	0.2	4
SW 137th Ave	2	162.2	176.6	0.2	3
Total		584.6	762.5	2.0	10

Arterial Level of Service: EB SW 152nd St #3

Cross Street	Node	Delay (s/veh)	Travel time (s)	Dist (mi)	Arterial Speed
West Turnpike Ramp	5	6.4	19.1	0.1	25
East Turnpike Ramp	6	3.6	9.7	0.1	24
	63	8.2	21.3	0.2	27
SW 112th Ave	7	63.7	73.0	0.1	7
Total		82.0	123.1	0.5	14

Arterial Level of Service: WB SW 152nd St #3

Cross Street	Node	Delay (s/veh)	Travel time (s)	Dist (mi)	Arterial Speed
	63	6.1	17.2	0.1	28
East Turnpike Ramp	6	23.0	35.8	0.2	16
West Turnpike Ramp	5	26.2	32.1	0.1	7
SW 117th Ave	4	88.3	137.3	0.1	5
Total		143.7	222.5	0.5	10

Arterial Level of Service: EB SW 152nd St #2

Cross Street	Node	Delay (s/veh)	Travel time (s)	Dist (mi)	Arterial Speed
SW 107th Ave	8	6.6	47.1	0.5	39
SW 102nd Ave	17	6.8	44.7	0.5	41
SW 99th Ct	16	3.7	21.4	0.2	36
SW 93rd Ave	9	25.4	78.8	0.7	31
	79	37.3	41.7	0.1	5
	10	105.4	112.3	0.1	2
US 1 / S Dixie Hwy	11	110.6	113.1	0.0	1
Total		295.8	459.0	2.1	16

Arterial Level of Service: WB SW 152nd St #2

Cross Street	Node	Delay (s/veh)	Travel time (s)	Dist (mi)	Arterial Speed
SW 92nd Ave	10	4.9	10.4	0.0	15
	79	7.0	13.0	0.1	19
SW 93rd Ave	9	17.9	22.2	0.1	9
SW 99th Ct	16	13.1	64.3	0.7	38
SW 102nd Ave	17	21.3	37.8	0.2	20
SW 107th Ave	8	20.9	61.4	0.5	30
SW 112th Ave	7	93.7	133.1	0.5	14
Total		178.9	342.1	2.1	22

Arterial Level of Service: EB SW 152nd St #1

Cross Street	Node	Delay (s/veh)	Travel time (s)	Dist (mi)	Arterial Speed
	47	3.9	15.7	0.1	24
SW 87th Ave	12	11.1	46.9	0.4	28
SW 82nd Ave	13	44.6	92.4	0.5	20
SW 77th Ave	14	7.8	41.8	0.5	44
Old Cutler Rd	15	38.6	74.4	0.4	18
Total		106.0	271.2	1.9	25

Arterial Level of Service: WB SW 152nd St #1

Cross Street	Node	Delay (s/veh)	Travel time (s)	Dist (mi)	Arterial Speed
SW 77th Ave	14	21.1	53.6	0.4	25
SW 82nd Ave	13	27.5	72.5	0.5	25
SW 87th Ave	12	18.2	69.5	0.5	26
	47	8.9	45.7	0.4	28
US 1 / S Dixie Hwy	11	126.6	135.8	0.1	3
Total		202.3	377.2	1.9	18

Movement	EBL	EBT	EBR	WBL	WBT	WBR	NBL	NBT	NBR	SBL	SBT	SBR
Lane Configurations												
Traffic Volume (veh/h)	103	290	118	51	312	822	254	1101	52	317	742	35
Future Volume (veh/h)	103	290	118	51	312	822	254	1101	52	317	742	35
Number	5	2	12	1	6	16	3	8	18	7	4	14
Initial Q (Qb), veh	0	0	0	0	0	0	0	0	0	0	0	0
Ped-Bike Adj(A_pbT)	1.00		1.00	1.00		1.00	1.00		1.00	1.00		1.00
Parking Bus, Adj	1.00	1.00	1.00	1.00	1.00	1.00	1.00	1.00	1.00	1.00	1.00	1.00
Adj Sat Flow, veh/h/ln	1863	1863	1900	1863	1863	1863	1863	1863	1900	1863	1863	1900
Adj Flow Rate, veh/h	149	326	148	73	520	934	374	1237	66	373	824	55
Adj No. of Lanes	1	1	0	1	1	1	1	2	0	1	2	0
Peak Hour Factor	0.69	0.89	0.80	0.70	0.60	0.88	0.68	0.89	0.79	0.85	0.90	0.64
Percent Heavy Veh, %	2	2	2	2	2	2	2	2	2	2	2	2
Cap, veh/h	152	445	202	232	685	583	394	1039	55	315	918	61
Arrive On Green	0.03	0.37	0.37	0.03	0.37	0.37	0.18	0.30	0.30	0.15	0.27	0.27
Sat Flow, veh/h	1774	1214	551	1774	1863	1583	1774	3418	182	1774	3368	225
Grp Volume(v), veh/h	149	0	474	73	520	934	374	640	663	373	433	446
Grp Sat Flow(s),veh/h/ln	1774	0	1765	1774	1863	1583	1774	1770	1831	1774	1770	1823
Q Serve(g_s), s	5.0	0.0	34.9	3.9	36.7	55.2	25.1	45.6	45.6	22.6	35.3	35.4
Cycle Q Clear(g_c), s	5.0	0.0	34.9	3.9	36.7	55.2	25.1	45.6	45.6	22.6	35.3	35.4
Prop In Lane	1.00		0.31	1.00		1.00	1.00		0.10	1.00		0.12
Lane Grp Cap(c), veh/h	152	0	647	232	685	583	394	538	557	315	482	497
V/C Ratio(X)	0.98	0.00	0.73	0.31	0.76	1.60	0.95	1.19	1.19	1.18	0.90	0.90
Avail Cap(c_a), veh/h	152	0	647	232	685	583	407	538	557	315	482	497
HCM Platoon Ratio	1.00	1.00	1.00	1.00	1.00	1.00	1.00	1.00	1.00	1.00	1.00	1.00
Upstream Filter(I)	1.00	0.00	1.00	1.00	1.00	1.00	1.00	1.00	1.00	1.00	1.00	1.00
Uniform Delay (d), s/veh	49.4	0.0	41.1	32.4	41.6	47.4	42.6	52.2	52.2	48.8	52.5	52.6
Incr Delay (d2), s/veh	66.8	0.0	4.3	0.8	4.9	279.3	31.2	102.6	103.1	110.0	19.4	18.9
Initial Q Delay(d3),s/veh	0.0	0.0	0.0	0.0	0.0	0.0	0.0	0.0	0.0	0.0	0.0	0.0
%ile BackOfQ(50%),veh/ln	6.7	0.0	17.8	1.9	19.9	69.3	18.7	37.6	39.0	22.7	19.9	20.5
LnGrp Delay(d),s/veh	116.2	0.0	45.4	33.2	46.5	326.7	73.8	154.8	155.3	158.8	71.9	71.5
LnGrp LOS	F		D	C	D	F	E	F	F	F	E	E
Approach Vol, veh/h		623			1527			1677			1252	
Approach Delay, s/veh		62.3			217.2			137.0			97.7	
Approach LOS		E			F			F			F	

Timer	1	2	3	4	5	6	7	8
Assigned Phs	1	2	3	4	5	6	7	8
Phs Duration (G+Y+Rc), s	10.6	60.4	32.7	46.3	10.4	60.6	28.0	51.0
Change Period (Y+Rc), s	5.4	5.4	5.4	5.4	5.4	5.4	5.4	5.4
Max Green Setting (Gmax), s	5.2	55.0	28.4	39.8	5.0	55.2	22.6	45.6
Max Q Clear Time (g_c+I1), s	5.9	36.9	27.1	37.4	7.0	57.2	24.6	47.6
Green Ext Time (p_c), s	0.0	10.3	0.2	2.2	0.0	0.0	0.0	0.0

Intersection Summary	
HCM 2010 Ctrl Delay	142.3
HCM 2010 LOS	F

Movement	EBL	EBT	EBR	WBL	WBT	WBR	NBL	NBT	NBR	SBL	SBT	SBR
Lane Configurations												
Traffic Volume (veh/h)	460	1088	61	349	634	727	64	1657	529	348	1259	119
Future Volume (veh/h)	460	1088	61	349	634	727	64	1657	529	348	1259	119
Number	5	2	12	1	6	16	3	8	18	7	4	14
Initial Q (Qb), veh	0	0	0	0	0	0	0	0	0	0	0	0
Ped-Bike Adj(A_pbT)	1.00		1.00	1.00		1.00	1.00		1.00	1.00		1.00
Parking Bus, Adj	1.00	1.00	1.00	1.00	1.00	1.00	1.00	1.00	1.00	1.00	1.00	1.00
Adj Sat Flow, veh/h/ln	1863	1863	1900	1863	1863	1863	1863	1863	1863	1863	1863	1900
Adj Flow Rate, veh/h	465	1236	81	426	893	817	94	1996	653	519	1464	135
Adj No. of Lanes	2	2	0	2	2	1	2	2	1	2	3	0
Peak Hour Factor	0.99	0.88	0.75	0.82	0.71	0.89	0.68	0.83	0.81	0.67	0.86	0.88
Percent Heavy Veh, %	2	2	2	2	2	2	2	2	2	2	2	2
Cap, veh/h	336	925	61	316	949	626	476	1345	747	437	1748	161
Arrive On Green	0.20	0.55	0.55	0.09	0.27	0.27	0.14	0.38	0.38	0.13	0.37	0.37
Sat Flow, veh/h	3442	3373	221	3442	3539	1583	3442	3539	1583	3442	4739	437
Grp Volume(v), veh/h	465	648	669	426	893	817	94	1996	653	519	1047	552
Grp Sat Flow(s),veh/h/ln	1721	1770	1824	1721	1770	1583	1721	1770	1583	1721	1695	1786
Q Serve(g_s), s	16.6	46.6	46.6	15.6	42.0	38.5	4.1	64.6	47.4	21.6	48.0	48.0
Cycle Q Clear(g_c), s	16.6	46.6	46.6	15.6	42.0	38.5	4.1	64.6	47.4	21.6	48.0	48.0
Prop In Lane	1.00		0.12	1.00		1.00	1.00		1.00	1.00		0.24
Lane Grp Cap(c), veh/h	336	485	500	316	949	626	476	1345	747	437	1250	659
V/C Ratio(X)	1.38	1.34	1.34	1.35	0.94	1.31	0.20	1.48	0.87	1.19	0.84	0.84
Avail Cap(c_a), veh/h	336	485	500	316	949	626	476	1345	747	437	1540	811
HCM Platoon Ratio	2.00	2.00	2.00	1.00	1.00	1.00	1.00	1.00	1.00	1.00	1.00	1.00
Upstream Filter(I)	0.78	0.78	0.78	1.00	1.00	1.00	1.00	1.00	1.00	1.00	1.00	1.00
Uniform Delay (d), s/veh	68.4	38.4	38.4	77.2	60.9	34.1	64.9	52.7	40.4	74.2	49.0	49.0
Incr Delay (d2), s/veh	186.7	161.7	162.9	176.6	16.7	148.8	0.2	221.9	11.2	105.0	3.5	6.5
Initial Q Delay(d3),s/veh	0.0	0.0	0.0	0.0	0.0	0.0	0.0	0.0	0.0	0.0	0.0	0.0
%ile BackOfQ(50%),veh/ln	16.6	44.2	45.7	15.2	22.8	42.5	2.0	73.0	22.9	16.6	23.0	24.8
LnGrp Delay(d),s/veh	255.1	200.1	201.3	253.8	77.6	182.9	65.1	274.6	51.6	179.2	52.5	55.5
LnGrp LOS	F	F	F	F	E	F	E	F	D	F	D	E
Approach Vol, veh/h		1782			2136			2743			2118	
Approach Delay, s/veh		214.9			153.0			214.3			84.3	
Approach LOS		F			F			F			F	

Timer	1	2	3	4	5	6	7	8
Assigned Phs	1	2	3	4	5	6	7	8
Phs Duration (G+Y+Rc), s	21.0	52.0	28.9	68.1	22.0	51.0	27.0	70.0
Change Period (Y+Rc), s	5.4	5.4	5.4	5.4	5.4	5.4	5.4	5.4
Max Green Setting (Gmax), s	15.6	46.6	9.0	77.2	16.6	45.6	21.6	64.6
Max Q Clear Time (g_c+I1), s	17.6	48.6	6.1	50.0	18.6	44.0	23.6	66.6
Green Ext Time (p_c), s	0.0	0.0	0.7	12.7	0.0	1.4	0.0	0.0

Intersection Summary	
HCM 2010 Ctrl Delay	168.2
HCM 2010 LOS	F

Movement	EBL	EBT	EBR	WBL	WBT	WBR	NBL	NBT	NBR	SBL	SBT	SBR
Lane Configurations												
Traffic Volume (veh/h)	60	2300	60	210	1710	210	30	0	30	310	20	20
Future Volume (veh/h)	60	2300	60	210	1710	210	30	0	30	310	20	20
Number	5	2	12	1	6	16	3	8	18	7	4	14
Initial Q (Qb), veh	0	0	0	0	0	0	0	0	0	0	0	0
Ped-Bike Adj(A_pbT)	1.00		1.00	1.00		1.00	1.00		1.00	1.00		1.00
Parking Bus, Adj	1.00	1.00	1.00	1.00	1.00	1.00	1.00	1.00	1.00	1.00	1.00	1.00
Adj Sat Flow, veh/h/ln	1863	1863	1900	1863	1863	1900	1900	1863	1900	1863	1863	1863
Adj Flow Rate, veh/h	65	2500	65	228	1859	228	33	0	33	353	0	22
Adj No. of Lanes	1	3	0	1	3	0	0	1	0	2	0	1
Peak Hour Factor	0.92	0.92	0.92	0.92	0.92	0.92	0.92	0.92	0.92	0.92	0.92	0.92
Percent Heavy Veh, %	2	2	2	2	2	2	2	2	2	2	2	2
Cap, veh/h	189	3333	86	251	3208	391	28	0	28	404	0	180
Arrive On Green	0.06	1.00	1.00	0.07	0.70	0.70	0.03	0.00	0.03	0.11	0.00	0.11
Sat Flow, veh/h	1774	5098	132	1774	4595	559	837	0	837	3548	0	1583
Grp Volume(v), veh/h	65	1659	906	228	1368	719	66	0	0	353	0	22
Grp Sat Flow(s),veh/h/ln	1774	1695	1839	1774	1695	1764	1673	0	0	1774	0	1583
Q Serve(g_s), s	2.1	0.0	0.0	9.8	34.7	35.3	5.6	0.0	0.0	16.6	0.0	2.1
Cycle Q Clear(g_c), s	2.1	0.0	0.0	9.8	34.7	35.3	5.6	0.0	0.0	16.6	0.0	2.1
Prop In Lane	1.00		0.07	1.00		0.32	0.50		0.50	1.00		1.00
Lane Grp Cap(c), veh/h	189	2217	1203	251	2367	1231	55	0	0	404	0	180
V/C Ratio(X)	0.34	0.75	0.75	0.91	0.58	0.58	1.20	0.00	0.00	0.87	0.00	0.12
Avail Cap(c_a), veh/h	241	2217	1203	379	2367	1231	55	0	0	513	0	229
HCM Platoon Ratio	2.00	2.00	2.00	1.00	1.00	1.00	1.00	1.00	1.00	1.00	1.00	1.00
Upstream Filter(I)	0.74	0.74	0.74	0.85	0.85	0.85	1.00	0.00	0.00	1.00	0.00	1.00
Uniform Delay (d), s/veh	11.9	0.0	0.0	31.6	13.0	13.1	82.2	0.0	0.0	74.1	0.0	67.7
Incr Delay (d2), s/veh	0.8	1.8	3.3	16.5	0.9	1.7	184.3	0.0	0.0	12.8	0.0	0.3
Initial Q Delay(d3),s/veh	0.0	0.0	0.0	0.0	0.0	0.0	0.0	0.0	0.0	0.0	0.0	0.0
%ile BackOfQ(50%),veh/ln	1.0	0.5	1.1	11.7	16.4	17.8	5.4	0.0	0.0	8.9	0.0	0.9
LnGrp Delay(d),s/veh	12.7	1.8	3.3	48.1	13.9	14.8	266.5	0.0	0.0	87.0	0.0	68.0
LnGrp LOS	B	A	A	D	B	B	F			F		E
Approach Vol, veh/h		2630			2315			66			375	
Approach Delay, s/veh		2.6			17.5			266.5			85.8	
Approach LOS		A			B			F			F	

Timer	1	2	3	4	5	6	7	8
Assigned Phs	1	2		4	5	6		8
Phs Duration (G+Y+Rc), s	17.7	116.6		24.8	10.2	124.1		11.0
Change Period (Y+Rc), s	5.4	5.4		5.4	5.4	5.4		5.4
Max Green Setting (Gmax), s	24.6	93.6		24.6	9.8	108.4		5.6
Max Q Clear Time (g_c+I1), s	11.8	2.0		18.6	4.1	37.3		7.6
Green Ext Time (p_c), s	0.5	86.4		0.7	0.0	67.9		0.0

Intersection Summary	
HCM 2010 Ctrl Delay	18.0
HCM 2010 LOS	B

Notes

User approved volume balancing among the lanes for turning movement.

Movement	EBL	EBT	EBR	WBL	WBT	WBR	NBL	NBT	NBR	SBL	SBT	SBR
Lane Configurations												
Traffic Volume (veh/h)	1549	1145	197	96	838	62	278	893	124	148	479	270
Future Volume (veh/h)	1549	1145	197	96	838	62	278	893	124	148	479	270
Number	5	2	12	1	6	16	3	8	18	7	4	14
Initial Q (Qb), veh	0	0	0	0	0	0	0	0	0	0	0	0
Ped-Bike Adj(A_pbT)	1.00		1.00	1.00		1.00	1.00		1.00	1.00		1.00
Parking Bus, Adj	1.00	1.00	1.00	1.00	1.00	1.00	1.00	1.00	1.00	1.00	1.00	1.00
Adj Sat Flow, veh/h/ln	1863	1863	1863	1863	1863	1863	1863	1863	1863	1863	1863	1863
Adj Flow Rate, veh/h	1844	1347	0	120	921	0	348	1076	157	161	544	0
Adj No. of Lanes	2	2	1	2	2	1	2	2	1	1	2	1
Peak Hour Factor	0.84	0.85	0.70	0.80	0.91	0.78	0.80	0.83	0.79	0.92	0.88	0.83
Percent Heavy Veh, %	2	2	2	2	2	2	2	2	2	2	2	2
Cap, veh/h	1348	1963	878	160	741	332	368	804	433	122	583	261
Arrive On Green	0.39	0.55	0.00	0.05	0.21	0.00	0.11	0.23	0.23	0.04	0.16	0.00
Sat Flow, veh/h	3442	3539	1583	3442	3539	1583	3442	3539	1583	1774	3539	1583
Grp Volume(v), veh/h	1844	1347	0	120	921	0	348	1076	157	161	544	0
Grp Sat Flow(s),veh/h/ln	1721	1770	1583	1721	1770	1583	1721	1770	1583	1774	1770	1583
Q Serve(g_s), s	66.6	46.5	0.0	5.9	35.6	0.0	17.1	38.6	13.6	7.6	25.8	0.0
Cycle Q Clear(g_c), s	66.6	46.5	0.0	5.9	35.6	0.0	17.1	38.6	13.6	7.6	25.8	0.0
Prop In Lane	1.00		1.00	1.00		1.00	1.00		1.00	1.00		1.00
Lane Grp Cap(c), veh/h	1348	1963	878	160	741	332	368	804	433	122	583	261
V/C Ratio(X)	1.37	0.69	0.00	0.75	1.24	0.00	0.94	1.34	0.36	1.32	0.93	0.00
Avail Cap(c_a), veh/h	1348	1963	878	231	741	332	368	804	433	122	583	261
HCM Platoon Ratio	1.00	1.00	1.00	1.00	1.00	1.00	1.00	1.00	1.00	1.00	1.00	1.00
Upstream Filter(I)	1.00	1.00	0.00	0.94	0.94	0.00	1.00	1.00	1.00	1.00	1.00	0.00
Uniform Delay (d), s/veh	51.7	27.2	0.0	80.1	67.2	0.0	75.4	65.7	49.8	64.3	70.1	0.0
Incr Delay (d2), s/veh	170.3	1.0	0.0	7.3	119.9	0.0	32.8	160.9	0.5	191.5	22.2	0.0
Initial Q Delay(d3),s/veh	0.0	0.0	0.0	0.0	0.0	0.0	0.0	0.0	0.0	0.0	0.0	0.0
%ile BackOfQ(50%),veh/ln	63.5	22.9	0.0	2.9	29.7	0.0	9.8	36.8	6.0	8.5	14.4	0.0
LnGrp Delay(d),s/veh	222.0	28.2	0.0	87.4	187.1	0.0	108.2	226.6	50.3	255.8	92.3	0.0
LnGrp LOS	F	C		F	F		F	F	D	F	F	
Approach Vol, veh/h		3191			1041			1581			705	
Approach Delay, s/veh		140.2			175.6			183.0			129.6	
Approach LOS		F			F			F			F	

Timer	1	2	3	4	5	6	7	8
Assigned Phs	1	2	3	4	5	6	7	8
Phs Duration (G+Y+Rc), s	13.3	99.7	23.6	33.4	72.0	41.0	13.0	44.0
Change Period (Y+Rc), s	5.4	5.4	5.4	5.4	5.4	5.4	5.4	5.4
Max Green Setting (Gmax), s	11.4	90.8	18.2	28.0	66.6	35.6	7.6	38.6
Max Q Clear Time (g_c+I1), s	7.9	48.5	19.1	27.8	68.6	37.6	9.6	40.6
Green Ext Time (p_c), s	0.1	30.3	0.0	0.2	0.0	0.0	0.0	0.0

Intersection Summary	
HCM 2010 Ctrl Delay	155.1
HCM 2010 LOS	F

Movement	EBL	EBT	EBR	WBL	WBT	WBR	NBL	NBT	NBR	SBL	SBT	SBR
Lane Configurations												
Traffic Volume (veh/h)	0	1281	188	184	868	0	0	0	0	316	16	6
Future Volume (veh/h)	0	1281	188	184	868	0	0	0	0	316	16	6
Number	5	2	12	1	6	16				7	4	14
Initial Q (Qb), veh	0	0	0	0	0	0				0	0	0
Ped-Bike Adj(A_pbT)	1.00		1.00	1.00		1.00				1.00		1.00
Parking Bus, Adj	1.00	1.00	1.00	1.00	1.00	1.00				1.00	1.00	1.00
Adj Sat Flow, veh/h/ln	0	1863	1863	1863	1863	0				1863	1863	1863
Adj Flow Rate, veh/h	0	1377	0	194	1009	0				379	0	0
Adj No. of Lanes	0	4	1	2	2	0				2	0	1
Peak Hour Factor	1.00	0.93	0.85	0.95	0.86	1.00				0.87	0.70	0.25
Percent Heavy Veh, %	0	2	2	2	2	0				2	2	2
Cap, veh/h	0	4548	1124	242	2873	0				442	0	197
Arrive On Green	0.00	0.71	0.00	0.07	0.81	0.00				0.12	0.00	0.00
Sat Flow, veh/h	0	6669	1583	3442	3632	0				3548	0	1583
Grp Volume(v), veh/h	0	1377	0	194	1009	0				379	0	0
Grp Sat Flow(s),veh/h/ln	0	1602	1583	1721	1770	0				1774	0	1583
Q Serve(g_s), s	0.0	13.5	0.0	9.4	12.8	0.0				17.8	0.0	0.0
Cycle Q Clear(g_c), s	0.0	13.5	0.0	9.4	12.8	0.0				17.8	0.0	0.0
Prop In Lane	0.00		1.00	1.00		0.00				1.00		1.00
Lane Grp Cap(c), veh/h	0	4548	1124	242	2873	0				442	0	197
V/C Ratio(X)	0.00	0.30	0.00	0.80	0.35	0.00				0.86	0.00	0.00
Avail Cap(c_a), veh/h	0	4548	1124	559	2873	0				1077	0	481
HCM Platoon Ratio	1.00	1.00	1.00	1.00	1.00	1.00				1.00	1.00	1.00
Upstream Filter(I)	0.00	0.62	0.00	0.90	0.90	0.00				1.00	0.00	0.00
Uniform Delay (d), s/veh	0.0	9.1	0.0	77.8	4.2	0.0				72.9	0.0	0.0
Incr Delay (d2), s/veh	0.0	0.1	0.0	5.5	0.3	0.0				4.9	0.0	0.0
Initial Q Delay(d3),s/veh	0.0	0.0	0.0	0.0	0.0	0.0				0.0	0.0	0.0
%ile BackOfQ(50%),veh/ln	0.0	6.0	0.0	4.7	6.3	0.0				9.0	0.0	0.0
LnGrp Delay(d),s/veh	0.0	9.2	0.0	83.3	4.5	0.0				77.8	0.0	0.0
LnGrp LOS		A		F	A					E		
Approach Vol, veh/h		1377			1203						379	
Approach Delay, s/veh		9.2			17.2						77.8	
Approach LOS		A			B						E	

Timer	1	2	3	4	5	6	7	8
Assigned Phs	1	2		4		6		
Phs Duration (G+Y+Rc), s	17.4	126.0		26.6		143.4		
Change Period (Y+Rc), s	5.4	5.4		5.4		5.4		
Max Green Setting (Gmax), s	27.6	74.6		51.6		107.6		
Max Q Clear Time (g_c+I1), s	11.4	15.5		19.8		14.8		
Green Ext Time (p_c), s	0.5	31.4		1.4		37.6		

Intersection Summary	
HCM 2010 Ctrl Delay	21.3
HCM 2010 LOS	C

Notes

User approved volume balancing among the lanes for turning movement.

Movement	EBL	EBT	EBR	WBL	WBT	WBR	NBL	NBT	NBR	SBL	SBT	SBR
Lane Configurations												
Traffic Volume (veh/h)	246	1338	0	0	909	605	172	78	190	0	0	0
Future Volume (veh/h)	246	1338	0	0	909	605	172	78	190	0	0	0
Number	5	2	12	1	6	16	3	8	18			
Initial Q (Qb), veh	0	0	0	0	0	0	0	0	0			
Ped-Bike Adj(A_pbT)	1.00		1.00	1.00		1.00	1.00		1.00			
Parking Bus, Adj	1.00	1.00	1.00	1.00	1.00	1.00	1.00	1.00	1.00			
Adj Sat Flow, veh/h/ln	1863	1863	0	0	1863	1900	1863	1863	1863			
Adj Flow Rate, veh/h	328	1520	0	0	957	0	249	85	0			
Adj No. of Lanes	2	2	0	0	4	0	2	1	1			
Peak Hour Factor	0.75	0.88	1.00	1.00	0.95	0.85	0.69	0.92	0.81			
Percent Heavy Veh, %	2	2	0	0	2	2	2	2	2			
Cap, veh/h	376	3001	0	0	4530	0	314	165	140			
Arrive On Green	0.22	1.00	0.00	0.00	0.71	0.00	0.09	0.09	0.00			
Sat Flow, veh/h	3442	3632	0	0	6929	0	3548	1863	1583			
Grp Volume(v), veh/h	328	1520	0	0	957	0	249	85	0			
Grp Sat Flow(s),veh/h/ln	1721	1770	0	0	1602	0	1774	1863	1583			
Q Serve(g_s), s	15.6	0.0	0.0	0.0	8.7	0.0	11.7	7.4	0.0			
Cycle Q Clear(g_c), s	15.6	0.0	0.0	0.0	8.7	0.0	11.7	7.4	0.0			
Prop In Lane	1.00		0.00	0.00		0.00	1.00		1.00			
Lane Grp Cap(c), veh/h	376	3001	0	0	4530	0	314	165	140			
V/C Ratio(X)	0.87	0.51	0.00	0.00	0.21	0.00	0.79	0.51	0.00			
Avail Cap(c_a), veh/h	619	3001	0	0	4530	0	931	489	415			
HCM Platoon Ratio	2.00	2.00	1.00	1.00	1.00	1.00	1.00	1.00	1.00			
Upstream Filter(I)	0.93	0.93	0.00	0.00	1.00	0.00	1.00	1.00	0.00			
Uniform Delay (d), s/veh	65.3	0.0	0.0	0.0	8.6	0.0	75.9	74.0	0.0			
Incr Delay (d2), s/veh	7.2	0.6	0.0	0.0	0.1	0.0	4.5	2.5	0.0			
Initial Q Delay(d3),s/veh	0.0	0.0	0.0	0.0	0.0	0.0	0.0	0.0	0.0			
%ile BackOfQ(50%),veh/ln	7.8	0.2	0.0	0.0	3.9	0.0	5.9	3.9	0.0			
LnGrp Delay(d),s/veh	72.5	0.6	0.0	0.0	8.7	0.0	80.4	76.4	0.0			
LnGrp LOS	E	A			A		F	E				
Approach Vol, veh/h		1848			957			334				
Approach Delay, s/veh		13.3			8.7			79.4				
Approach LOS		B			A			E				

Timer	1	2	3	4	5	6	7	8
Assigned Phs		2			5	6		8
Phs Duration (G+Y+Rc), s		149.5			24.0	125.6		20.5
Change Period (Y+Rc), s		5.4			5.4	5.4		5.4
Max Green Setting (Gmax), s		114.6			30.6	78.6		44.6
Max Q Clear Time (g_c+I1), s		2.0			17.6	10.7		13.7
Green Ext Time (p_c), s		44.2			0.9	36.4		1.4

Intersection Summary	
HCM 2010 Ctrl Delay	18.9
HCM 2010 LOS	B

Notes

User approved volume balancing among the lanes for turning movement.

User approved ignoring U-Turning movement.

Movement	EBL	EBT	EBR	WBL	WBT	WBR	NBL	NBT	NBR	SBL	SBT	SBR
Lane Configurations												
Traffic Volume (veh/h)	138	1148	161	105	890	73	360	384	150	109	239	142
Future Volume (veh/h)	138	1148	161	105	890	73	360	384	150	109	239	142
Number	5	2	12	1	6	16	3	8	18	7	4	14
Initial Q (Qb), veh	0	0	0	0	0	0	0	0	0	0	0	0
Ped-Bike Adj(A_pbT)	1.00		1.00	1.00		1.00	1.00		1.00	1.00		1.00
Parking Bus, Adj	1.00	1.00	1.00	1.00	1.00	1.00	1.00	1.00	1.00	1.00	1.00	1.00
Adj Sat Flow, veh/h/ln	1863	1863	1900	1863	1863	1900	1863	1863	1863	1863	1863	1863
Adj Flow Rate, veh/h	209	1276	209	144	1011	74	424	452	185	154	249	203
Adj No. of Lanes	1	2	0	1	2	0	1	1	1	1	1	1
Peak Hour Factor	0.66	0.90	0.77	0.73	0.88	0.98	0.85	0.85	0.81	0.71	0.96	0.70
Percent Heavy Veh, %	2	2	2	2	2	2	2	2	2	2	2	2
Cap, veh/h	285	1417	230	169	1484	109	420	528	538	206	275	356
Arrive On Green	0.08	0.46	0.46	0.06	0.44	0.44	0.20	0.28	0.28	0.07	0.15	0.15
Sat Flow, veh/h	1774	3049	496	1774	3344	245	1774	1863	1583	1774	1863	1583
Grp Volume(v), veh/h	209	736	749	144	535	550	424	452	185	154	249	203
Grp Sat Flow(s),veh/h/ln	1774	1770	1775	1774	1770	1820	1774	1863	1583	1774	1863	1583
Q Serve(g_s), s	10.8	64.9	66.3	7.5	41.0	41.0	34.7	39.0	14.8	11.6	22.4	19.4
Cycle Q Clear(g_c), s	10.8	64.9	66.3	7.5	41.0	41.0	34.7	39.0	14.8	11.6	22.4	19.4
Prop In Lane	1.00		0.28	1.00		0.13	1.00		1.00	1.00		1.00
Lane Grp Cap(c), veh/h	285	822	825	169	785	808	420	528	538	206	275	356
V/C Ratio(X)	0.73	0.90	0.91	0.85	0.68	0.68	1.01	0.86	0.34	0.75	0.91	0.57
Avail Cap(c_a), veh/h	354	822	825	200	785	808	420	534	543	206	281	361
HCM Platoon Ratio	1.00	1.00	1.00	1.00	1.00	1.00	1.00	1.00	1.00	1.00	1.00	1.00
Upstream Filter(I)	1.00	1.00	1.00	0.90	0.90	0.90	1.00	1.00	1.00	1.00	1.00	1.00
Uniform Delay (d), s/veh	30.4	41.7	42.1	38.7	37.7	37.7	50.4	57.6	41.9	59.5	71.3	58.6
Incr Delay (d2), s/veh	6.0	14.4	15.5	23.1	4.3	4.2	46.6	12.8	0.4	14.0	30.2	2.1
Initial Q Delay(d3),s/veh	0.0	0.0	0.0	0.0	0.0	0.0	0.0	0.0	0.0	0.0	0.0	0.0
%ile BackOfQ(50%),veh/ln	5.8	35.0	36.0	4.7	21.0	21.6	25.1	22.0	6.5	2.2	13.9	8.7
LnGrp Delay(d),s/veh	36.3	56.1	57.6	61.8	42.0	41.9	97.1	70.4	42.3	73.5	101.5	60.6
LnGrp LOS	D	E	E	E	D	D	F	E	D	E	F	E
Approach Vol, veh/h		1694			1229			1061			606	
Approach Delay, s/veh		54.3			44.2			76.2			80.7	
Approach LOS		D			D			E			F	

Timer	1	2	3	4	5	6	7	8
Assigned Phs	1	2	3	4	5	6	7	8
Phs Duration (G+Y+Rc), s	15.0	84.4	40.1	30.5	18.6	80.8	17.0	53.6
Change Period (Y+Rc), s	5.4	5.4	5.4	5.4	5.4	5.4	5.4	5.4
Max Green Setting (Gmax), s	12.6	75.5	34.7	25.6	19.8	68.3	11.6	48.7
Max Q Clear Time (g_c+I1), s	9.5	68.3	36.7	24.4	12.8	43.0	13.6	41.0
Green Ext Time (p_c), s	0.1	6.3	0.0	0.7	0.3	18.7	0.0	3.5

Intersection Summary	
HCM 2010 Ctrl Delay	60.2
HCM 2010 LOS	E

Movement	EBL	EBT	WBT	WBR	SBL	SBR
Lane Configurations						
Traffic Volume (veh/h)	29	1421	1000	81	137	63
Future Volume (veh/h)	29	1421	1000	81	137	63
Number	5	2	6	16	7	14
Initial Q (Qb), veh	0	0	0	0	0	0
Ped-Bike Adj(A_pbT)	1.00			1.00	1.00	1.00
Parking Bus, Adj	1.00	1.00	1.00	1.00	1.00	1.00
Adj Sat Flow, veh/h/ln	1863	1863	1863	1900	1863	1863
Adj Flow Rate, veh/h	37	1692	1111	145	176	84
Adj No. of Lanes	1	2	2	0	1	1
Peak Hour Factor	0.78	0.84	0.90	0.56	0.78	0.75
Percent Heavy Veh, %	2	2	2	2	2	2
Cap, veh/h	362	2913	2592	338	201	180
Arrive On Green	1.00	1.00	0.82	0.82	0.11	0.11
Sat Flow, veh/h	440	3632	3243	410	1774	1583
Grp Volume(v), veh/h	37	1692	623	633	176	84
Grp Sat Flow(s),veh/h/ln	440	1770	1770	1790	1774	1583
Q Serve(g_s), s	1.9	0.0	16.4	16.4	16.6	8.4
Cycle Q Clear(g_c), s	18.3	0.0	16.4	16.4	16.6	8.4
Prop In Lane	1.00			0.23	1.00	1.00
Lane Grp Cap(c), veh/h	362	2913	1457	1474	201	180
V/C Ratio(X)	0.10	0.58	0.43	0.43	0.87	0.47
Avail Cap(c_a), veh/h	362	2913	1457	1474	361	322
HCM Platoon Ratio	2.00	2.00	1.00	1.00	1.00	1.00
Upstream Filter(I)	0.38	0.38	0.91	0.91	1.00	1.00
Uniform Delay (d), s/veh	1.1	0.0	4.1	4.1	74.2	70.6
Incr Delay (d2), s/veh	0.2	0.3	0.2	0.2	11.3	1.9
Initial Q Delay(d3),s/veh	0.0	0.0	0.0	0.0	0.0	0.0
%ile BackOfQ(50%),veh/ln	0.2	0.1	7.9	8.2	8.8	3.8
LnGrp Delay(d),s/veh	1.3	0.3	4.3	4.3	85.4	72.4
LnGrp LOS	A	A	A	A	F	E
Approach Vol, veh/h		1729	1256		260	
Approach Delay, s/veh		0.3	4.3		81.2	
Approach LOS		A	A		F	

Timer	1	2	3	4	5	6	7	8
Assigned Phs		2		4		6		
Phs Duration (G+Y+Rc), s		145.3		24.7		145.3		
Change Period (Y+Rc), s		5.4		5.4		5.4		
Max Green Setting (Gmax), s		124.6		34.6		124.6		
Max Q Clear Time (g_c+I1), s		20.3		18.6		18.4		
Green Ext Time (p_c), s		60.4		0.7		61.0		

Intersection Summary	
HCM 2010 Ctrl Delay	8.4
HCM 2010 LOS	A

Movement	EBL	EBT	EBR	WBL	WBT	WBR	NBL	NBT	NBR	SBL	SBT	SBR
Lane Configurations												
Traffic Volume (veh/h)	578	1139	46	9	693	76	9	4	7	58	3	78
Future Volume (veh/h)	578	1139	46	9	693	76	9	4	7	58	3	78
Number	5	2	12	1	6	16	3	8	18	7	4	14
Initial Q (Qb), veh	0	0	0	0	0	0	0	0	0	0	0	0
Ped-Bike Adj(A_pbT)	1.00		1.00	1.00		1.00	1.00		1.00	1.00		1.00
Parking Bus, Adj	1.00	1.00	1.00	1.00	1.00	1.00	1.00	1.00	1.00	1.00	1.00	1.00
Adj Sat Flow, veh/h/ln	1863	1863	1900	1863	1863	1900	1900	1863	1863	1900	1863	1863
Adj Flow Rate, veh/h	635	1186	72	13	753	104	13	12	9	81	8	98
Adj No. of Lanes	1	2	0	1	2	0	0	1	1	0	1	1
Peak Hour Factor	0.91	0.96	0.64	0.67	0.92	0.73	0.67	0.33	0.75	0.72	0.38	0.80
Percent Heavy Veh, %	2	2	2	2	2	2	2	2	2	2	2	2
Cap, veh/h	663	2925	177	350	2188	302	89	72	117	140	10	324
Arrive On Green	0.13	0.86	0.86	0.70	0.70	0.70	0.07	0.07	0.07	0.07	0.07	0.07
Sat Flow, veh/h	1774	3390	206	439	3125	431	768	981	1583	1356	134	1583
Grp Volume(v), veh/h	635	619	639	13	426	431	25	0	9	89	0	98
Grp Sat Flow(s),veh/h/ln	1774	1770	1826	439	1770	1787	1750	0	1583	1490	0	1583
Q Serve(g_s), s	18.1	12.5	12.6	1.6	16.2	16.2	0.0	0.0	0.9	7.7	0.0	8.9
Cycle Q Clear(g_c), s	18.1	12.5	12.6	1.6	16.2	16.2	2.2	0.0	0.9	9.9	0.0	8.9
Prop In Lane	1.00		0.11	1.00		0.24	0.52		1.00	0.91		1.00
Lane Grp Cap(c), veh/h	663	1527	1576	350	1239	1251	161	0	117	150	0	324
V/C Ratio(X)	0.96	0.41	0.41	0.04	0.34	0.34	0.16	0.00	0.08	0.59	0.00	0.30
Avail Cap(c_a), veh/h	1219	1527	1576	350	1239	1251	246	0	201	226	0	409
HCM Platoon Ratio	1.00	1.00	1.00	1.00	1.00	1.00	1.00	1.00	1.00	1.00	1.00	1.00
Upstream Filter(I)	0.75	0.75	0.75	1.00	1.00	1.00	1.00	0.00	1.00	1.00	0.00	1.00
Uniform Delay (d), s/veh	16.4	2.5	2.5	7.9	10.1	10.1	73.9	0.0	73.4	77.3	0.0	57.3
Incr Delay (d2), s/veh	8.0	0.6	0.6	0.2	0.8	0.8	0.4	0.0	0.3	3.7	0.0	0.5
Initial Q Delay(d3),s/veh	0.0	0.0	0.0	0.0	0.0	0.0	0.0	0.0	0.0	0.0	0.0	0.0
%ile BackOfQ(50%),veh/ln	30.6	6.3	6.5	0.2	8.1	8.2	1.1	0.0	0.4	4.3	0.0	3.9
LnGrp Delay(d),s/veh	24.4	3.1	3.0	8.1	10.8	10.8	74.4	0.0	73.6	81.0	0.0	57.8
LnGrp LOS	C	A	A	A	B	B	E		E	F		E
Approach Vol, veh/h		1893			870			34			187	
Approach Delay, s/veh		10.2			10.8			74.2			68.9	
Approach LOS		B			B			E			E	

Timer	1	2	3	4	5	6	7	8
Assigned Phs		2		4	5	6		8
Phs Duration (G+Y+Rc), s		152.1		17.9	27.7	124.4		17.9
Change Period (Y+Rc), s		5.4		5.4	5.4	5.4		5.4
Max Green Setting (Gmax), s		137.6		21.6	75.6	56.6		21.6
Max Q Clear Time (g_c+I1), s		14.6		11.9	20.1	18.2		4.2
Green Ext Time (p_c), s		25.4		0.6	2.2	19.1		0.8

Intersection Summary	
HCM 2010 Ctrl Delay	14.8
HCM 2010 LOS	B

Movement	EBL	EBT	EBR	WBL	WBT	WBR	NBL	NBT	NBR	SBL	SBT	SBR
Lane Configurations												
Traffic Volume (veh/h)	665	304	181	164	255	31	410	2641	107	85	1295	261
Future Volume (veh/h)	665	304	181	164	255	31	410	2641	107	85	1295	261
Number	5	2	12	1	6	16	3	8	18	7	4	14
Initial Q (Qb), veh	0	0	0	0	0	0	0	0	0	0	0	0
Ped-Bike Adj(A_pbT)	1.00		1.00	1.00		1.00	1.00		1.00	1.00		1.00
Parking Bus, Adj	1.00	1.00	1.00	1.00	1.00	1.00	1.00	1.00	1.00	1.00	1.00	1.00
Adj Sat Flow, veh/h/ln	1863	1863	1863	1863	1863	1900	1863	1863	1900	1863	1863	1863
Adj Flow Rate, veh/h	764	330	0	189	331	55	466	2871	141	96	1408	311
Adj No. of Lanes	2	1	1	1	2	0	2	3	0	1	3	1
Peak Hour Factor	0.87	0.92	0.71	0.79	0.84	0.56	0.88	0.92	0.76	0.89	0.92	0.84
Percent Heavy Veh, %	2	2	2	2	2	2	2	2	2	2	2	2
Cap, veh/h	818	430	365	184	323	53	519	2532	122	95	1973	614
Arrive On Green	0.08	0.08	0.00	0.10	0.10	0.10	0.15	0.51	0.51	0.03	0.39	0.39
Sat Flow, veh/h	3548	1863	1583	1774	3122	513	3442	4970	240	1774	5085	1583
Grp Volume(v), veh/h	764	330	0	189	196	190	466	1944	1068	96	1408	311
Grp Sat Flow(s),veh/h/ln	1774	1863	1583	1774	1863	1772	1721	1695	1820	1774	1695	1583
Q Serve(g_s), s	36.4	29.6	0.0	17.6	17.6	17.6	22.6	86.6	86.6	5.0	39.8	25.4
Cycle Q Clear(g_c), s	36.4	29.6	0.0	17.6	17.6	17.6	22.6	86.6	86.6	5.0	39.8	25.4
Prop In Lane	1.00		1.00	1.00		0.29	1.00		0.13	1.00		1.00
Lane Grp Cap(c), veh/h	818	430	365	184	193	183	519	1727	927	95	1973	614
V/C Ratio(X)	0.93	0.77	0.00	1.03	1.02	1.04	0.90	1.13	1.15	1.02	0.71	0.51
Avail Cap(c_a), veh/h	818	430	365	184	193	183	640	1727	927	95	1973	614
HCM Platoon Ratio	0.33	0.33	0.33	1.00	1.00	1.00	1.00	1.00	1.00	1.00	1.00	1.00
Upstream Filter(I)	1.00	1.00	0.00	1.00	1.00	1.00	1.00	1.00	1.00	1.00	1.00	1.00
Uniform Delay (d), s/veh	77.2	74.1	0.0	76.2	76.2	76.2	70.9	41.7	41.7	47.2	44.0	39.6
Incr Delay (d2), s/veh	19.0	12.4	0.0	74.2	69.2	76.0	13.5	64.7	80.8	96.8	1.2	0.7
Initial Q Delay(d3),s/veh	0.0	0.0	0.0	0.2	0.1	0.2	0.0	0.0	0.0	0.1	0.0	0.0
%ile BackOfQ(50%),veh/ln	20.1	16.8	0.0	12.4	12.8	12.5	11.7	55.8	64.1	7.2	18.9	11.3
LnGrp Delay(d),s/veh	96.2	86.5	0.0	150.6	145.6	152.3	84.4	106.4	122.5	144.2	45.3	40.3
LnGrp LOS	F	F		F	F	F	F	F	F	F	D	D
Approach Vol, veh/h		1094			575			3478			1815	
Approach Delay, s/veh		93.3			149.5			108.4			49.7	
Approach LOS		F			F			F			D	

Timer	1	2	3	4	5	6	7	8
Assigned Phs		2	3	4		6	7	8
Phs Duration (G+Y+Rc), s		44.6	31.0	71.4		23.0	10.4	92.0
Change Period (Y+Rc), s		5.4	5.4	5.4		5.4	5.4	5.4
Max Green Setting (Gmax), s		39.2	31.6	60.0		17.6	5.0	86.6
Max Q Clear Time (g_c+I1), s		38.4	24.6	41.8		19.6	7.0	88.6
Green Ext Time (p_c), s		0.4	1.0	18.0		0.0	0.0	0.0

Intersection Summary	
HCM 2010 Ctrl Delay	94.1
HCM 2010 LOS	F

Notes

User approved volume balancing among the lanes for turning movement.

Movement	EBL	EBT	EBR	WBL	WBT	WBR	NBL	NBT	NBR	SBL	SBT	SBR
Lane Configurations												
Traffic Volume (veh/h)	132	468	28	10	363	59	38	104	11	38	44	32
Future Volume (veh/h)	132	468	28	10	363	59	38	104	11	38	44	32
Number	5	2	12	1	6	16	3	8	18	7	4	14
Initial Q (Qb), veh	0	0	0	0	0	0	0	0	0	0	0	0
Ped-Bike Adj(A_pbT)	1.00		1.00	1.00		1.00	1.00		1.00	1.00		1.00
Parking Bus, Adj	1.00	1.00	1.00	1.00	1.00	1.00	1.00	1.00	1.00	1.00	1.00	1.00
Adj Sat Flow, veh/h/ln	1863	1863	1900	1863	1863	1900	1863	1863	1900	1863	1863	1900
Adj Flow Rate, veh/h	171	585	33	12	412	80	56	137	20	44	60	48
Adj No. of Lanes	1	1	0	1	1	0	1	1	0	1	1	0
Peak Hour Factor	0.77	0.80	0.84	0.83	0.88	0.74	0.68	0.76	0.55	0.86	0.73	0.67
Percent Heavy Veh, %	2	2	2	2	2	2	2	2	2	2	2	2
Cap, veh/h	414	801	45	294	588	114	288	204	30	251	116	93
Arrive On Green	0.09	0.46	0.46	0.02	0.39	0.39	0.05	0.13	0.13	0.04	0.12	0.12
Sat Flow, veh/h	1774	1747	99	1774	1516	294	1774	1590	232	1774	960	768
Grp Volume(v), veh/h	171	0	618	12	0	492	56	0	157	44	0	108
Grp Sat Flow(s),veh/h/ln	1774	0	1845	1774	0	1811	1774	0	1822	1774	0	1727
Q Serve(g_s), s	3.3	0.0	16.6	0.2	0.0	13.9	1.6	0.0	5.0	1.3	0.0	3.6
Cycle Q Clear(g_c), s	3.3	0.0	16.6	0.2	0.0	13.9	1.6	0.0	5.0	1.3	0.0	3.6
Prop In Lane	1.00		0.05	1.00		0.16	1.00		0.13	1.00		0.44
Lane Grp Cap(c), veh/h	414	0	846	294	0	703	288	0	234	251	0	209
V/C Ratio(X)	0.41	0.00	0.73	0.04	0.00	0.70	0.19	0.00	0.67	0.17	0.00	0.52
Avail Cap(c_a), veh/h	560	0	1316	419	0	1143	362	0	437	327	0	403
HCM Platoon Ratio	1.00	1.00	1.00	1.00	1.00	1.00	1.00	1.00	1.00	1.00	1.00	1.00
Upstream Filter(I)	1.00	0.00	1.00	1.00	0.00	1.00	1.00	0.00	1.00	1.00	0.00	1.00
Uniform Delay (d), s/veh	11.0	0.0	13.4	12.2	0.0	15.6	21.7	0.0	25.3	22.0	0.0	25.1
Incr Delay (d2), s/veh	0.7	0.0	1.2	0.1	0.0	1.3	0.3	0.0	3.3	0.3	0.0	2.0
Initial Q Delay(d3),s/veh	0.0	0.0	0.0	0.0	0.0	0.0	0.0	0.0	0.0	0.0	0.0	0.0
%ile BackOfQ(50%),veh/ln	1.6	0.0	8.7	0.1	0.0	7.1	0.8	0.0	2.7	0.6	0.0	1.8
LnGrp Delay(d),s/veh	11.7	0.0	14.7	12.2	0.0	16.9	22.0	0.0	28.6	22.3	0.0	27.0
LnGrp LOS	B		B	B		B	C		C	C		C
Approach Vol, veh/h		789			504			213			152	
Approach Delay, s/veh		14.0			16.8			26.9			25.6	
Approach LOS		B			B			C			C	

Timer	1	2	3	4	5	6	7	8
Assigned Phs	1	2	3	4	5	6	7	8
Phs Duration (G+Y+Rc), s	6.3	33.3	8.5	12.8	10.6	29.0	8.0	13.2
Change Period (Y+Rc), s	5.4	5.4	5.4	5.4	5.4	5.4	5.4	5.4
Max Green Setting (Gmax), s	5.2	43.4	5.6	14.2	10.2	38.4	5.2	14.6
Max Q Clear Time (g_c+I1), s	2.2	18.6	3.6	5.6	5.3	15.9	3.3	7.0
Green Ext Time (p_c), s	0.0	8.0	0.0	0.9	0.2	7.7	0.0	0.8

Intersection Summary	
HCM 2010 Ctrl Delay	17.6
HCM 2010 LOS	B

Movement	EBL	EBT	EBR	WBL	WBT	WBR	NBL	NBT	NBR	SBL	SBT	SBR
Lane Configurations												
Traffic Volume (veh/h)	126	362	57	54	206	19	85	443	72	35	231	46
Future Volume (veh/h)	126	362	57	54	206	19	85	443	72	35	231	46
Number	5	2	12	1	6	16	3	8	18	7	4	14
Initial Q (Qb), veh	0	0	0	0	0	0	0	0	0	0	0	0
Ped-Bike Adj(A_pbT)	1.00		1.00	1.00		1.00	1.00		1.00	1.00		1.00
Parking Bus, Adj	1.00	1.00	1.00	1.00	1.00	1.00	1.00	1.00	1.00	1.00	1.00	1.00
Adj Sat Flow, veh/h/ln	1863	1863	1900	1863	1863	1900	1863	1863	1900	1863	1863	1900
Adj Flow Rate, veh/h	183	398	90	72	219	42	157	482	114	44	260	78
Adj No. of Lanes	1	1	0	1	1	0	1	1	0	1	1	0
Peak Hour Factor	0.69	0.91	0.63	0.75	0.94	0.45	0.54	0.92	0.63	0.80	0.89	0.59
Percent Heavy Veh, %	2	2	2	2	2	2	2	2	2	2	2	2
Cap, veh/h	399	444	100	210	385	74	387	517	122	183	430	129
Arrive On Green	0.10	0.30	0.30	0.05	0.25	0.25	0.08	0.36	0.36	0.04	0.31	0.31
Sat Flow, veh/h	1774	1471	333	1774	1520	291	1774	1457	345	1774	1377	413
Grp Volume(v), veh/h	183	0	488	72	0	261	157	0	596	44	0	338
Grp Sat Flow(s),veh/h/ln	1774	0	1804	1774	0	1811	1774	0	1802	1774	0	1790
Q Serve(g_s), s	6.2	0.0	21.8	2.5	0.0	10.6	4.9	0.0	26.8	1.4	0.0	13.5
Cycle Q Clear(g_c), s	6.2	0.0	21.8	2.5	0.0	10.6	4.9	0.0	26.8	1.4	0.0	13.5
Prop In Lane	1.00		0.18	1.00		0.16	1.00		0.19	1.00		0.23
Lane Grp Cap(c), veh/h	399	0	544	210	0	459	387	0	640	183	0	559
V/C Ratio(X)	0.46	0.00	0.90	0.34	0.00	0.57	0.41	0.00	0.93	0.24	0.00	0.60
Avail Cap(c_a), veh/h	409	0	590	234	0	519	421	0	655	223	0	581
HCM Platoon Ratio	1.00	1.00	1.00	1.00	1.00	1.00	1.00	1.00	1.00	1.00	1.00	1.00
Upstream Filter(I)	1.00	0.00	1.00	1.00	0.00	1.00	1.00	0.00	1.00	1.00	0.00	1.00
Uniform Delay (d), s/veh	20.2	0.0	28.1	23.4	0.0	27.4	18.2	0.0	26.1	21.6	0.0	24.5
Incr Delay (d2), s/veh	0.8	0.0	15.7	1.0	0.0	1.1	0.7	0.0	20.0	0.7	0.0	1.7
Initial Q Delay(d3),s/veh	0.0	0.0	0.0	0.0	0.0	0.0	0.0	0.0	0.0	0.0	0.0	0.0
%ile BackOfQ(50%),veh/ln	3.1	0.0	13.2	1.3	0.0	5.4	2.5	0.0	16.8	0.7	0.0	6.9
LnGrp Delay(d),s/veh	21.1	0.0	43.8	24.4	0.0	28.5	18.9	0.0	46.1	22.3	0.0	26.2
LnGrp LOS	C		D	C		C	B		D	C		C
Approach Vol, veh/h		671			333			753			382	
Approach Delay, s/veh		37.6			27.6			40.4			25.8	
Approach LOS		D			C			D			C	

Timer	1	2	3	4	5	6	7	8
Assigned Phs	1	2	3	4	5	6	7	8
Phs Duration (G+Y+Rc), s	9.5	30.8	12.2	31.7	13.5	26.7	8.6	35.3
Change Period (Y+Rc), s	5.4	5.4	5.4	5.4	5.4	5.4	5.4	5.4
Max Green Setting (Gmax), s	5.2	27.5	8.4	27.3	8.6	24.1	5.1	30.6
Max Q Clear Time (g_c+I1), s	4.5	23.8	6.9	15.5	8.2	12.6	3.4	28.8
Green Ext Time (p_c), s	0.0	1.6	0.1	4.9	0.0	3.6	0.0	1.0

Intersection Summary	
HCM 2010 Ctrl Delay	34.9
HCM 2010 LOS	C

Movement	EBL	EBT	EBR	WBL	WBT	WBR	NBL	NBT	NBR	SBL	SBT	SBR
Lane Configurations												
Traffic Volume (veh/h)	391	185	13	1	134	156	29	59	8	79	28	62
Future Volume (veh/h)	391	185	13	1	134	156	29	59	8	79	28	62
Number	5	2	12	1	6	16	3	8	18	7	4	14
Initial Q (Qb), veh	0	0	0	0	0	0	0	0	0	0	0	0
Ped-Bike Adj(A_pbT)	1.00		1.00	1.00		1.00	1.00		1.00	1.00		1.00
Parking Bus, Adj	1.00	1.00	1.00	1.00	1.00	1.00	1.00	1.00	1.00	1.00	1.00	1.00
Adj Sat Flow, veh/h/ln	1863	1863	1900	1863	1863	1900	1863	1863	1900	1863	1863	1863
Adj Flow Rate, veh/h	483	240	28	4	144	205	44	72	16	90	44	95
Adj No. of Lanes	1	1	0	1	1	0	1	1	0	1	1	1
Peak Hour Factor	0.81	0.77	0.46	0.25	0.93	0.76	0.66	0.82	0.50	0.88	0.64	0.65
Percent Heavy Veh, %	2	2	2	2	2	2	2	2	2	2	2	2
Cap, veh/h	704	1066	124	782	453	646	298	232	51	276	292	248
Arrive On Green	0.65	0.65	0.65	0.65	0.65	0.65	0.16	0.16	0.16	0.16	0.16	0.16
Sat Flow, veh/h	1028	1638	191	1107	696	991	1245	1477	328	1304	1863	1583
Grp Volume(v), veh/h	483	0	268	4	0	349	44	0	88	90	44	95
Grp Sat Flow(s),veh/h/ln	1028	0	1829	1107	0	1688	1245	0	1805	1304	1863	1583
Q Serve(g_s), s	21.9	0.0	3.4	0.1	0.0	5.1	1.8	0.0	2.4	3.7	1.1	3.0
Cycle Q Clear(g_c), s	27.0	0.0	3.4	3.4	0.0	5.1	2.9	0.0	2.4	6.1	1.1	3.0
Prop In Lane	1.00		0.10	1.00		0.59	1.00		0.18	1.00		1.00
Lane Grp Cap(c), veh/h	704	0	1191	782	0	1099	298	0	283	276	292	248
V/C Ratio(X)	0.69	0.00	0.23	0.01	0.00	0.32	0.15	0.00	0.31	0.33	0.15	0.38
Avail Cap(c_a), veh/h	1234	0	2134	1353	0	1969	404	0	437	387	451	383
HCM Platoon Ratio	1.00	1.00	1.00	1.00	1.00	1.00	1.00	1.00	1.00	1.00	1.00	1.00
Upstream Filter(I)	1.00	0.00	1.00	1.00	0.00	1.00	1.00	0.00	1.00	1.00	1.00	1.00
Uniform Delay (d), s/veh	10.3	0.0	4.0	4.7	0.0	4.3	21.7	0.0	21.0	23.7	20.5	21.3
Incr Delay (d2), s/veh	1.2	0.0	0.1	0.0	0.0	0.2	0.2	0.0	0.6	0.7	0.2	1.0
Initial Q Delay(d3),s/veh	0.0	0.0	0.0	0.0	0.0	0.0	0.0	0.0	0.0	0.0	0.0	0.0
%ile BackOfQ(50%),veh/ln	6.3	0.0	1.7	0.0	0.0	2.4	0.6	0.0	1.2	1.4	0.6	1.4
LnGrp Delay(d),s/veh	11.5	0.0	4.1	4.7	0.0	4.5	22.0	0.0	21.6	24.4	20.7	22.2
LnGrp LOS	B		A	A		A	C		C	C	C	C
Approach Vol, veh/h		751			353			132			229	
Approach Delay, s/veh		8.8			4.5			21.7			22.8	
Approach LOS		A			A			C			C	

Timer	1	2	3	4	5	6	7	8
Assigned Phs		2		4		6		8
Phs Duration (G+Y+Rc), s		42.0		14.2		42.0		14.2
Change Period (Y+Rc), s		5.4		5.4		5.4		5.4
Max Green Setting (Gmax), s		65.6		13.6		65.6		13.6
Max Q Clear Time (g_c+I1), s		29.0		8.1		7.1		4.9
Green Ext Time (p_c), s		7.6		0.7		7.9		1.0

Intersection Summary	
HCM 2010 Ctrl Delay	11.1
HCM 2010 LOS	B

Movement	EBL	EBT	EBR	WBL	WBT	WBR	NBL	NBT	NBR	SBL	SBT	SBR
Lane Configurations												
Traffic Volume (veh/h)	86	71	117	57	55	11	129	833	80	16	311	40
Future Volume (veh/h)	86	71	117	57	55	11	129	833	80	16	311	40
Number	5	2	12	1	6	16	3	8	18	7	4	14
Initial Q (Qb), veh	0	0	0	0	0	0	0	0	0	0	0	0
Ped-Bike Adj(A_pbT)	1.00		1.00	1.00		1.00	1.00		1.00	1.00		1.00
Parking Bus, Adj	1.00	1.00	1.00	1.00	1.00	1.00	1.00	1.00	1.00	1.00	1.00	1.00
Adj Sat Flow, veh/h/ln	1863	1863	1900	1863	1863	1900	1863	1863	1900	1863	1863	1900
Adj Flow Rate, veh/h	126	113	167	102	100	20	150	905	123	30	349	60
Adj No. of Lanes	1	1	0	1	1	0	1	1	0	1	1	0
Peak Hour Factor	0.68	0.63	0.70	0.56	0.55	0.55	0.86	0.92	0.65	0.54	0.89	0.67
Percent Heavy Veh, %	2	2	2	2	2	2	2	2	2	2	2	2
Cap, veh/h	284	110	162	155	243	49	552	901	123	115	825	142
Arrive On Green	0.05	0.16	0.16	0.05	0.16	0.16	0.06	0.56	0.56	0.03	0.53	0.53
Sat Flow, veh/h	1774	680	1005	1774	1508	302	1774	1606	218	1774	1549	266
Grp Volume(v), veh/h	126	0	280	102	0	120	150	0	1028	30	0	409
Grp Sat Flow(s),veh/h/ln	1774	0	1685	1774	0	1810	1774	0	1824	1774	0	1816
Q Serve(g_s), s	5.4	0.0	17.4	5.2	0.0	6.4	4.1	0.0	60.6	0.8	0.0	14.7
Cycle Q Clear(g_c), s	5.4	0.0	17.4	5.2	0.0	6.4	4.1	0.0	60.6	0.8	0.0	14.7
Prop In Lane	1.00		0.60	1.00		0.17	1.00		0.12	1.00		0.15
Lane Grp Cap(c), veh/h	284	0	272	155	0	292	552	0	1024	115	0	967
V/C Ratio(X)	0.44	0.00	1.03	0.66	0.00	0.41	0.27	0.00	1.00	0.26	0.00	0.42
Avail Cap(c_a), veh/h	284	0	272	155	0	292	568	0	1024	149	0	986
HCM Platoon Ratio	1.00	1.00	1.00	1.00	1.00	1.00	1.00	1.00	1.00	1.00	1.00	1.00
Upstream Filter(I)	1.00	0.00	1.00	1.00	0.00	1.00	1.00	0.00	1.00	1.00	0.00	1.00
Uniform Delay (d), s/veh	37.4	0.0	45.3	37.0	0.0	40.7	11.2	0.0	23.7	25.9	0.0	15.2
Incr Delay (d2), s/veh	1.1	0.0	62.8	9.6	0.0	0.9	0.3	0.0	29.1	1.2	0.0	0.3
Initial Q Delay(d3),s/veh	0.0	0.0	0.0	0.0	0.0	0.0	0.0	0.0	0.0	0.0	0.0	0.0
%ile BackOfQ(50%),veh/ln	0.9	0.0	12.8	2.9	0.0	3.3	2.0	0.0	38.4	0.5	0.0	7.4
LnGrp Delay(d),s/veh	38.5	0.0	108.1	46.6	0.0	41.6	11.4	0.0	52.8	27.1	0.0	15.5
LnGrp LOS	D		F	D		D	B		F	C		B
Approach Vol, veh/h		406			222			1178			439	
Approach Delay, s/veh		86.5			43.9			47.5			16.3	
Approach LOS		F			D			D			B	

Timer	1	2	3	4	5	6	7	8
Assigned Phs	1	2	3	4	5	6	7	8
Phs Duration (G+Y+Rc), s	10.8	22.8	11.5	62.9	10.8	22.8	8.4	66.0
Change Period (Y+Rc), s	5.4	5.4	5.4	5.4	5.4	5.4	5.4	5.4
Max Green Setting (Gmax), s	5.4	17.4	7.0	58.6	5.4	17.4	5.0	60.6
Max Q Clear Time (g_c+I1), s	7.2	19.4	6.1	16.7	7.4	8.4	2.8	62.6
Green Ext Time (p_c), s	0.0	0.0	0.0	16.6	0.0	1.6	0.0	0.0

Intersection Summary	
HCM 2010 Ctrl Delay	48.1
HCM 2010 LOS	D

Movement	EBL	EBT	EBR	WBL	WBT	WBR	NBL	NBT	NBR	SBL	SBT	SBR
Lane Configurations												
Traffic Volume (veh/h)	110	1630	70	30	770	60	0	0	110	40	30	40
Future Volume (veh/h)	110	1630	70	30	770	60	0	0	110	40	30	40
Number	5	2	12	1	6	16	3	8	18	7	4	14
Initial Q (Qb), veh	0	0	0	0	0	0	0	0	0	0	0	0
Ped-Bike Adj(A_pbT)	1.00		1.00	1.00		1.00	1.00		1.00	1.00		1.00
Parking Bus, Adj	1.00	1.00	1.00	1.00	1.00	1.00	1.00	1.00	1.00	1.00	1.00	1.00
Adj Sat Flow, veh/h/ln	1863	1863	1900	1863	1863	1900	0	1863	1900	1900	1863	1863
Adj Flow Rate, veh/h	120	1772	76	33	837	65	0	0	120	43	33	43
Adj No. of Lanes	1	2	0	1	2	0	0	1	0	0	1	1
Peak Hour Factor	0.92	0.92	0.92	0.92	0.92	0.92	0.92	0.92	0.92	0.92	0.92	0.92
Percent Heavy Veh, %	2	2	2	2	2	2	0	2	2	2	2	2
Cap, veh/h	503	2802	119	229	2493	194	0	0	200	79	52	200
Arrive On Green	0.06	1.00	1.00	0.75	0.75	0.75	0.00	0.00	0.13	0.13	0.13	0.13
Sat Flow, veh/h	1774	3459	147	249	3328	258	0	0	1583	360	409	1583
Grp Volume(v), veh/h	120	902	946	33	445	457	0	0	120	76	0	43
Grp Sat Flow(s),veh/h/ln	1774	1770	1837	249	1770	1817	0	0	1583	770	0	1583
Q Serve(g_s), s	2.7	0.0	0.0	6.5	14.3	14.3	0.0	0.0	12.2	6.7	0.0	4.1
Cycle Q Clear(g_c), s	2.7	0.0	0.0	6.5	14.3	14.3	0.0	0.0	12.2	18.9	0.0	4.1
Prop In Lane	1.00		0.08	1.00		0.14	0.00		1.00	0.57		1.00
Lane Grp Cap(c), veh/h	503	1434	1488	229	1326	1361	0	0	200	130	0	200
V/C Ratio(X)	0.24	0.63	0.64	0.14	0.34	0.34	0.00	0.00	0.60	0.58	0.00	0.22
Avail Cap(c_a), veh/h	583	1434	1488	229	1326	1361	0	0	248	175	0	248
HCM Platoon Ratio	2.00	2.00	2.00	1.00	1.00	1.00	1.00	1.00	1.00	1.00	1.00	1.00
Upstream Filter(I)	0.55	0.55	0.55	0.88	0.88	0.88	0.00	0.00	1.00	1.00	0.00	1.00
Uniform Delay (d), s/veh	4.8	0.0	0.0	6.2	7.1	7.1	0.0	0.0	70.2	75.9	0.0	66.7
Incr Delay (d2), s/veh	0.1	1.2	1.2	1.2	0.6	0.6	0.0	0.0	2.9	4.1	0.0	0.5
Initial Q Delay(d3),s/veh	0.0	0.0	0.0	0.0	0.0	0.0	0.0	0.0	0.0	0.0	0.0	0.0
%ile BackOfQ(50%),veh/ln	1.3	0.5	0.5	0.5	7.1	7.3	0.0	0.0	5.5	3.7	0.0	3.8
LnGrp Delay(d),s/veh	5.0	1.2	1.2	7.3	7.8	7.7	0.0	0.0	73.1	80.0	0.0	67.2
LnGrp LOS	A	A	A	A	A	A			E	E		E
Approach Vol, veh/h		1968			935			120			119	
Approach Delay, s/veh		1.4			7.7			73.1			75.4	
Approach LOS		A			A			E			E	

Timer	1	2	3	4	5	6	7	8
Assigned Phs		2		4	5	6		8
Phs Duration (G+Y+Rc), s		143.1		26.9	10.4	132.7		26.9
Change Period (Y+Rc), s		5.4		5.4	5.4	5.4		5.4
Max Green Setting (Gmax), s		132.6		26.6	12.6	114.6		26.6
Max Q Clear Time (g_c+I1), s		2.0		20.9	4.7	16.3		14.2
Green Ext Time (p_c), s		58.9		0.6	0.2	52.4		1.0

Intersection Summary	
HCM 2010 Ctrl Delay	8.8
HCM 2010 LOS	A

Movement	EBL	EBT	EBR	WBL	WBT	WBR	NBL	NBT	NBR	SBL	SBT	SBR
Lane Configurations												
Traffic Volume (veh/h)	130	1450	130	10	750	50	160	50	240	120	20	80
Future Volume (veh/h)	130	1450	130	10	750	50	160	50	240	120	20	80
Number	5	2	12	1	6	16	3	8	18	7	4	14
Initial Q (Qb), veh	0	0	0	0	0	0	0	0	0	0	0	0
Ped-Bike Adj(A_pbT)	1.00		1.00	1.00		1.00	1.00		1.00	1.00		1.00
Parking Bus, Adj	1.00	1.00	1.00	1.00	1.00	1.00	1.00	1.00	1.00	1.00	1.00	1.00
Adj Sat Flow, veh/h/ln	1863	1863	1900	1863	1863	1900	1863	1863	1863	1863	1863	1863
Adj Flow Rate, veh/h	141	1576	141	11	815	54	174	54	261	130	22	87
Adj No. of Lanes	1	2	0	1	2	0	1	1	1	1	1	1
Peak Hour Factor	0.92	0.92	0.92	0.92	0.92	0.92	0.92	0.92	0.92	0.92	0.92	0.92
Percent Heavy Veh, %	2	2	2	2	2	2	2	2	2	2	2	2
Cap, veh/h	488	2373	210	261	2349	156	258	108	110	219	64	111
Arrive On Green	0.07	1.00	1.00	0.01	0.70	0.70	0.11	0.06	0.06	0.08	0.03	0.03
Sat Flow, veh/h	1774	3289	292	1774	3370	223	1774	1863	1583	1774	1863	1583
Grp Volume(v), veh/h	141	842	875	11	428	441	174	54	261	130	22	87
Grp Sat Flow(s),veh/h/ln	1774	1770	1811	1774	1770	1823	1774	1863	1583	1774	1863	1583
Q Serve(g_s), s	4.1	0.0	0.0	0.3	16.4	16.4	15.8	4.8	9.8	11.9	2.0	5.8
Cycle Q Clear(g_c), s	4.1	0.0	0.0	0.3	16.4	16.4	15.8	4.8	9.8	11.9	2.0	5.8
Prop In Lane	1.00		0.16	1.00		0.12	1.00		1.00	1.00		1.00
Lane Grp Cap(c), veh/h	488	1277	1307	261	1234	1271	258	108	110	219	64	111
V/C Ratio(X)	0.29	0.66	0.67	0.04	0.35	0.35	0.67	0.50	2.37	0.59	0.35	0.78
Avail Cap(c_a), veh/h	530	1277	1307	496	1234	1271	276	108	110	237	64	111
HCM Platoon Ratio	2.00	2.00	2.00	1.00	1.00	1.00	1.00	1.00	1.00	1.00	1.00	1.00
Upstream Filter(I)	0.76	0.76	0.76	0.95	0.95	0.95	1.00	1.00	1.00	1.00	1.00	1.00
Uniform Delay (d), s/veh	7.2	0.0	0.0	7.2	10.3	10.3	69.2	77.7	79.1	71.7	80.2	77.7
Incr Delay (d2), s/veh	0.2	2.0	2.1	0.1	0.7	0.7	5.8	3.7	642.4	3.5	3.2	29.2
Initial Q Delay(d3),s/veh	0.0	0.0	0.0	0.0	0.0	0.0	0.0	0.0	0.0	0.0	0.0	0.0
%ile BackOfQ(50%),veh/ln	1.9	0.7	0.8	0.2	8.2	8.5	8.2	2.6	24.9	6.0	1.1	4.9
LnGrp Delay(d),s/veh	7.4	2.0	2.1	7.3	11.0	11.0	75.1	81.4	721.4	75.2	83.5	106.9
LnGrp LOS	A	A	A	A	B	B	E	F	F	E	F	F
Approach Vol, veh/h		1858			880			489			239	
Approach Delay, s/veh		2.5			11.0			420.8			87.5	
Approach LOS		A			B			F			F	

Timer	1	2	3	4	5	6	7	8
Assigned Phs	1	2	3	4	5	6	7	8
Phs Duration (G+Y+Rc), s	7.4	128.1	23.3	11.2	11.6	123.9	19.3	15.2
Change Period (Y+Rc), s	5.4	5.4	5.4	5.4	5.4	5.4	5.4	5.4
Max Green Setting (Gmax), s	24.6	98.4	19.6	5.8	10.2	112.8	15.6	9.8
Max Q Clear Time (g_c+I1), s	2.3	2.0	17.8	7.8	6.1	18.4	13.9	11.8
Green Ext Time (p_c), s	0.0	41.3	0.1	0.0	0.1	41.0	0.0	0.0

Intersection Summary	
HCM 2010 Ctrl Delay	69.5
HCM 2010 LOS	E

Movement	EBL	EBT	WBT	WBR	SBL	SBR
Lane Configurations						
Traffic Volume (veh/h)	140	2610	2170	240	340	20
Future Volume (veh/h)	140	2610	2170	240	340	20
Number	5	2	6	16	7	14
Initial Q (Qb), veh	0	0	0	0	0	0
Ped-Bike Adj(A_pbT)	1.00			1.00	1.00	1.00
Parking Bus, Adj	1.00	1.00	1.00	1.00	1.00	1.00
Adj Sat Flow, veh/h/ln	1863	1863	1863	1900	1863	1863
Adj Flow Rate, veh/h	152	2837	2359	261	370	22
Adj No. of Lanes	1	3	3	0	2	1
Peak Hour Factor	0.92	0.92	0.92	0.92	0.92	0.92
Percent Heavy Veh, %	2	2	2	2	2	2
Cap, veh/h	172	4141	3446	373	421	194
Arrive On Green	0.09	1.00	0.74	0.74	0.12	0.12
Sat Flow, veh/h	1774	5253	4827	504	3442	1583
Grp Volume(v), veh/h	152	2837	1702	918	370	22
Grp Sat Flow(s),veh/h/ln	1774	1695	1695	1774	1721	1583
Q Serve(g_s), s	5.0	0.0	44.6	47.5	18.0	2.1
Cycle Q Clear(g_c), s	5.0	0.0	44.6	47.5	18.0	2.1
Prop In Lane	1.00			0.28	1.00	1.00
Lane Grp Cap(c), veh/h	172	4141	2507	1312	421	194
V/C Ratio(X)	0.88	0.69	0.68	0.70	0.88	0.11
Avail Cap(c_a), veh/h	313	4141	2507	1312	539	248
HCM Platoon Ratio	2.00	2.00	1.00	1.00	1.00	1.00
Upstream Filter(I)	0.64	0.64	1.00	1.00	1.00	1.00
Uniform Delay (d), s/veh	39.3	0.0	11.6	12.0	73.4	66.4
Incr Delay (d2), s/veh	9.4	0.6	1.5	3.1	12.8	0.3
Initial Q Delay(d3),s/veh	0.0	0.0	0.0	0.0	0.0	0.0
%ile BackOfQ(50%),veh/ln	7.4	0.2	21.1	24.1	9.3	2.0
LnGrp Delay(d),s/veh	48.7	0.6	13.1	15.1	86.2	66.7
LnGrp LOS	D	A	B	B	F	E
Approach Vol, veh/h		2989	2620		392	
Approach Delay, s/veh		3.0	13.8		85.1	
Approach LOS		A	B		F	

Timer	1	2	3	4	5	6	7	8
Assigned Phs		2		4	5	6		
Phs Duration (G+Y+Rc), s		143.8		26.2	12.7	131.1		
Change Period (Y+Rc), s		5.4		5.4	5.4	5.4		
Max Green Setting (Gmax), s		132.6		26.6	20.8	106.4		
Max Q Clear Time (g_c+I1), s		2.0		20.0	7.0	49.5		
Green Ext Time (p_c), s		128.2		0.8	0.3	56.4		

Intersection Summary	
HCM 2010 Ctrl Delay	13.1
HCM 2010 LOS	B

Movement	EBT	EBR	WBL	WBT	NBL	NBR
Lane Configurations						
Traffic Volume (veh/h)	2510	130	110	2120	10	110
Future Volume (veh/h)	2510	130	110	2120	10	110
Number	2	12	1	6	3	18
Initial Q (Qb), veh	0	0	0	0	0	0
Ped-Bike Adj(A_pbT)		1.00	1.00		1.00	1.00
Parking Bus, Adj	1.00	1.00	1.00	1.00	1.00	1.00
Adj Sat Flow, veh/h/ln	1863	1900	1863	1863	1863	1863
Adj Flow Rate, veh/h	2728	141	120	2304	11	120
Adj No. of Lanes	3	0	1	3	1	2
Peak Hour Factor	0.92	0.92	0.92	0.92	0.92	0.92
Percent Heavy Veh, %	2	2	2	2	2	2
Cap, veh/h	4069	207	168	4485	97	152
Arrive On Green	1.00	1.00	0.03	0.88	0.05	0.05
Sat Flow, veh/h	5124	252	1774	5253	1774	2787
Grp Volume(v), veh/h	1853	1016	120	2304	11	120
Grp Sat Flow(s),veh/h/ln	1695	1818	1774	1695	1774	1393
Q Serve(g_s), s	0.0	0.0	1.7	16.6	1.0	7.2
Cycle Q Clear(g_c), s	0.0	0.0	1.7	16.6	1.0	7.2
Prop In Lane		0.14	1.00		1.00	1.00
Lane Grp Cap(c), veh/h	2783	1493	168	4485	97	152
V/C Ratio(X)	0.67	0.68	0.71	0.51	0.11	0.79
Avail Cap(c_a), veh/h	2783	1493	321	4485	111	174
HCM Platoon Ratio	2.00	2.00	1.00	1.00	1.00	1.00
Upstream Filter(I)	0.39	0.39	0.56	0.56	1.00	1.00
Uniform Delay (d), s/veh	0.0	0.0	17.6	2.2	76.5	79.4
Incr Delay (d2), s/veh	0.5	1.0	3.2	0.2	0.5	19.1
Initial Q Delay(d3),s/veh	0.0	0.0	0.0	0.0	0.0	0.0
%ile BackOfQ(50%),veh/ln	0.2	0.4	4.8	7.6	0.5	3.2
LnGrp Delay(d),s/veh	0.5	1.0	20.8	2.4	77.0	98.5
LnGrp LOS	A	A	C	A	E	F
Approach Vol, veh/h	2869			2424	131	
Approach Delay, s/veh	0.7			3.3	96.7	
Approach LOS	A			A	F	

Timer	1	2	3	4	5	6	7	8
Assigned Phs	1	2				6		8
Phs Duration (G+Y+Rc), s	10.4	145.0				155.3		14.7
Change Period (Y+Rc), s	5.4	5.4				5.4		5.4
Max Green Setting (Gmax), s	19.6	123.6				148.6		10.6
Max Q Clear Time (g_c+I1), s	3.7	2.0				18.6		9.2
Green Ext Time (p_c), s	0.2	118.1				126.0		0.0

Intersection Summary	
HCM 2010 Ctrl Delay	4.2
HCM 2010 LOS	A

HCM 2010 analysis supports speed limit in the range of 25 and 55 mph

Movement	EBL	EBT	WBT	WBR	SBL	SBR
Lane Configurations						
Traffic Volume (veh/h)	110	2050	1680	90	110	10
Future Volume (veh/h)	110	2050	1680	90	110	10
Number	5	2	6	16	7	14
Initial Q (Qb), veh	0	0	0	0	0	0
Ped-Bike Adj(A_pbT)	1.00			1.00	1.00	1.00
Parking Bus, Adj	1.00	1.00	1.00	1.00	1.00	1.00
Adj Sat Flow, veh/h/ln	1863	1863	1863	1900	1863	1863
Adj Flow Rate, veh/h	120	2228	1826	98	120	11
Adj No. of Lanes	1	3	3	0	1	1
Peak Hour Factor	0.92	0.92	0.92	0.92	0.92	0.92
Percent Heavy Veh, %	2	2	2	2	2	2
Cap, veh/h	250	4356	3931	211	142	127
Arrive On Green	0.03	0.86	0.80	0.80	0.08	0.08
Sat Flow, veh/h	1774	5253	5109	265	1774	1583
Grp Volume(v), veh/h	120	2228	1252	672	120	11
Grp Sat Flow(s),veh/h/ln	1774	1695	1695	1816	1774	1583
Q Serve(g_s), s	2.0	19.0	20.4	20.4	11.3	1.1
Cycle Q Clear(g_c), s	2.0	19.0	20.4	20.4	11.3	1.1
Prop In Lane	1.00			0.15	1.00	1.00
Lane Grp Cap(c), veh/h	250	4356	2697	1445	142	127
V/C Ratio(X)	0.48	0.51	0.46	0.47	0.85	0.09
Avail Cap(c_a), veh/h	424	4356	2697	1445	288	257
HCM Platoon Ratio	1.00	1.00	1.00	1.00	1.00	1.00
Upstream Filter(I)	1.00	1.00	0.83	0.83	1.00	1.00
Uniform Delay (d), s/veh	5.5	3.1	5.6	5.6	77.2	72.5
Incr Delay (d2), s/veh	1.4	0.4	0.1	0.2	12.8	0.3
Initial Q Delay(d3),s/veh	0.0	0.0	0.0	0.0	0.0	0.0
%ile BackOfQ(50%),veh/ln	1.6	8.8	9.4	10.2	6.1	1.0
LnGrp Delay(d),s/veh	6.9	3.5	5.7	5.8	89.9	72.8
LnGrp LOS	A	A	A	A	F	E
Approach Vol, veh/h		2348	1924		131	
Approach Delay, s/veh		3.7	5.8		88.5	
Approach LOS		A	A		F	

Timer	1	2	3	4	5	6	7	8
Assigned Phs		2		4	5	6		
Phs Duration (G+Y+Rc), s		151.0		19.0	10.4	140.6		
Change Period (Y+Rc), s		5.4		5.4	5.4	5.4		
Max Green Setting (Gmax), s		131.6		27.6	21.6	104.6		
Max Q Clear Time (g_c+I1), s		21.0		13.3	4.0	22.4		
Green Ext Time (p_c), s		96.7		0.3	0.2	74.3		

Intersection Summary	
HCM 2010 Ctrl Delay	7.1
HCM 2010 LOS	A

Movement	EBL	EBT	EBR	WBL	WBT	WBR	NBL	NBT	NBR	SBL	SBT	SBR
Lane Configurations												
Traffic Volume (veh/h)	40	1450	40	20	820	20	20	0	100	90	0	40
Future Volume (veh/h)	40	1450	40	20	820	20	20	0	100	90	0	40
Number	5	2	12	1	6	16	3	8	18	7	4	14
Initial Q (Qb), veh	0	0	0	0	0	0	0	0	0	0	0	0
Ped-Bike Adj(A_pbT)	1.00		1.00	1.00		1.00	1.00		1.00	1.00		1.00
Parking Bus, Adj	1.00	1.00	1.00	1.00	1.00	1.00	1.00	1.00	1.00	1.00	1.00	1.00
Adj Sat Flow, veh/h/ln	1863	1863	1900	1863	1863	1900	1900	1863	1900	1900	1863	1863
Adj Flow Rate, veh/h	43	1576	43	22	891	22	22	0	109	98	0	43
Adj No. of Lanes	1	2	0	1	2	0	0	2	0	0	1	1
Peak Hour Factor	0.92	0.92	0.92	0.92	0.92	0.92	0.92	0.92	0.92	0.92	0.92	0.92
Percent Heavy Veh, %	2	2	2	2	2	2	2	2	2	2	2	2
Cap, veh/h	459	2515	68	281	2499	62	82	0	247	175	0	271
Arrive On Green	0.03	0.95	0.95	0.02	0.71	0.71	0.17	0.00	0.17	0.17	0.00	0.17
Sat Flow, veh/h	1774	3520	96	1774	3530	87	231	0	1441	773	0	1583
Grp Volume(v), veh/h	43	791	828	22	447	466	22	0	109	98	0	43
Grp Sat Flow(s),veh/h/ln	1774	1770	1846	1774	1770	1847	231	0	1441	773	0	1583
Q Serve(g_s), s	1.1	9.3	9.4	0.6	16.8	16.8	2.7	0.0	11.5	12.6	0.0	3.9
Cycle Q Clear(g_c), s	1.1	9.3	9.4	0.6	16.8	16.8	26.9	0.0	11.5	24.2	0.0	3.9
Prop In Lane	1.00		0.05	1.00		0.05	1.00		1.00	1.00		1.00
Lane Grp Cap(c), veh/h	459	1264	1319	281	1253	1308	82	0	247	175	0	271
V/C Ratio(X)	0.09	0.63	0.63	0.08	0.36	0.36	0.27	0.00	0.44	0.56	0.00	0.16
Avail Cap(c_a), veh/h	482	1264	1319	316	1253	1308	94	0	259	186	0	285
HCM Platoon Ratio	1.33	1.33	1.33	1.00	1.00	1.00	1.00	1.00	1.00	1.00	1.00	1.00
Upstream Filter(I)	0.72	0.72	0.72	0.36	0.36	0.36	1.00	0.00	1.00	1.00	0.00	1.00
Uniform Delay (d), s/veh	7.0	1.4	1.4	6.6	9.7	9.7	81.4	0.0	63.2	74.0	0.0	60.0
Incr Delay (d2), s/veh	0.1	1.7	1.6	0.0	0.3	0.3	1.7	0.0	1.2	3.4	0.0	0.3
Initial Q Delay(d3),s/veh	0.0	0.0	0.0	0.0	0.0	0.0	0.0	0.0	0.0	0.0	0.0	0.0
%ile BackOfQ(50%),veh/ln	0.5	4.6	4.8	0.3	8.3	8.6	1.1	0.0	4.7	4.7	0.0	1.7
LnGrp Delay(d),s/veh	7.1	3.1	3.1	6.7	10.0	10.0	83.2	0.0	64.4	77.4	0.0	60.3
LnGrp LOS	A	A	A	A	A	A	F		E	E		E
Approach Vol, veh/h		1662			935			131			141	
Approach Delay, s/veh		3.2			9.9			67.6			72.1	
Approach LOS		A			A			E			E	

Timer	1	2	3	4	5	6	7	8
Assigned Phs	1	2		4	5	6		8
Phs Duration (G+Y+Rc), s	8.6	126.9		34.5	9.7	125.7		34.5
Change Period (Y+Rc), s	5.4	5.4		5.4	5.4	5.4		5.4
Max Green Setting (Gmax), s	6.6	116.6		30.6	6.6	116.6		30.6
Max Q Clear Time (g_c+I1), s	2.6	11.4		26.2	3.1	18.8		28.9
Green Ext Time (p_c), s	0.0	41.7		0.6	0.0	40.7		0.2

Intersection Summary	
HCM 2010 Ctrl Delay	11.7
HCM 2010 LOS	B

Movement	EBL	EBT	EBR	WBL	WBT	WBR	NBL	NBT	NBR	SBL	SBT	SBR
Lane Configurations												
Traffic Volume (veh/h)	30	1200	30	70	780	70	30	90	130	130	90	30
Future Volume (veh/h)	30	1200	30	70	780	70	30	90	130	130	90	30
Number	5	2	12	1	6	16	3	8	18	7	4	14
Initial Q (Qb), veh	0	0	0	0	0	0	0	0	0	0	0	0
Ped-Bike Adj(A_pbT)	1.00		1.00	1.00		1.00	1.00		1.00	1.00		1.00
Parking Bus, Adj	1.00	1.00	1.00	1.00	1.00	1.00	1.00	1.00	1.00	1.00	1.00	1.00
Adj Sat Flow, veh/h/ln	1863	1863	1900	1863	1863	1900	1863	1863	1900	1863	1863	1900
Adj Flow Rate, veh/h	33	1304	33	76	848	76	33	98	141	141	98	33
Adj No. of Lanes	1	2	0	1	2	0	1	1	0	1	1	0
Peak Hour Factor	0.92	0.92	0.92	0.92	0.92	0.92	0.92	0.92	0.92	0.92	0.92	0.92
Percent Heavy Veh, %	2	2	2	2	2	2	2	2	2	2	2	2
Cap, veh/h	372	2144	54	341	2015	181	273	110	158	203	284	96
Arrive On Green	0.05	1.00	1.00	0.03	0.61	0.61	0.02	0.16	0.16	0.08	0.21	0.21
Sat Flow, veh/h	1774	3527	89	1774	3286	294	1774	692	995	1774	1334	449
Grp Volume(v), veh/h	33	654	683	76	457	467	33	0	239	141	0	131
Grp Sat Flow(s),veh/h/ln	1774	1770	1847	1774	1770	1811	1774	0	1687	1774	0	1783
Q Serve(g_s), s	1.2	0.0	0.0	2.8	22.9	22.9	2.6	0.0	23.6	11.0	0.0	10.6
Cycle Q Clear(g_c), s	1.2	0.0	0.0	2.8	22.9	22.9	2.6	0.0	23.6	11.0	0.0	10.6
Prop In Lane	1.00		0.05	1.00		0.16	1.00		0.59	1.00		0.25
Lane Grp Cap(c), veh/h	372	1076	1123	341	1085	1111	273	0	269	203	0	380
V/C Ratio(X)	0.09	0.61	0.61	0.22	0.42	0.42	0.12	0.00	0.89	0.70	0.00	0.34
Avail Cap(c_a), veh/h	389	1076	1123	404	1085	1111	290	0	343	239	0	478
HCM Platoon Ratio	2.00	2.00	2.00	1.00	1.00	1.00	1.00	1.00	1.00	1.00	1.00	1.00
Upstream Filter(I)	0.87	0.87	0.87	0.95	0.95	0.95	1.00	0.00	1.00	1.00	0.00	1.00
Uniform Delay (d), s/veh	13.0	0.0	0.0	11.7	17.1	17.1	57.9	0.0	70.0	54.4	0.0	56.8
Incr Delay (d2), s/veh	0.1	2.2	2.1	0.3	1.1	1.1	0.2	0.0	20.1	6.9	0.0	0.5
Initial Q Delay(d3),s/veh	0.0	0.0	0.0	0.0	0.0	0.0	0.0	0.0	0.0	0.0	0.0	0.0
%ile BackOfQ(50%),veh/ln	0.6	0.7	0.7	1.4	11.5	11.8	1.3	0.0	12.5	5.8	0.0	5.3
LnGrp Delay(d),s/veh	13.1	2.2	2.1	12.0	18.3	18.2	58.1	0.0	90.2	61.3	0.0	57.3
LnGrp LOS	B	A	A	B	B	B	E		F	E		E
Approach Vol, veh/h		1370			1000			272			272	
Approach Delay, s/veh		2.4			17.8			86.3			59.4	
Approach LOS		A			B			F			E	

Timer	1	2	3	4	5	6	7	8
Assigned Phs	1	2	3	4	5	6	7	8
Phs Duration (G+Y+Rc), s	10.3	108.7	9.3	41.6	9.3	109.7	18.5	32.5
Change Period (Y+Rc), s	5.4	5.4	5.4	5.4	5.4	5.4	5.4	5.4
Max Green Setting (Gmax), s	10.9	86.3	5.6	45.6	5.6	91.6	16.6	34.6
Max Q Clear Time (g_c+I1), s	4.8	2.0	4.6	12.6	3.2	24.9	13.0	25.6
Green Ext Time (p_c), s	0.1	29.3	0.0	2.5	0.0	27.5	0.1	1.5

Intersection Summary	
HCM 2010 Ctrl Delay	20.9
HCM 2010 LOS	C

Movement	EBT	EBR	WBL	WBT	NBL	NBR
Lane Configurations						
Traffic Volume (veh/h)	940	50	90	790	110	260
Future Volume (veh/h)	940	50	90	790	110	260
Number	2	12	1	6	3	18
Initial Q (Qb), veh	0	0	0	0	0	0
Ped-Bike Adj(A_pbT)		1.00	1.00		1.00	1.00
Parking Bus, Adj	1.00	1.00	1.00	1.00	1.00	1.00
Adj Sat Flow, veh/h/ln	1863	1900	1863	1863	1863	1863
Adj Flow Rate, veh/h	1022	54	98	859	120	283
Adj No. of Lanes	2	0	1	2	1	1
Peak Hour Factor	0.92	0.92	0.92	0.92	0.92	0.92
Percent Heavy Veh, %	2	2	2	2	2	2
Cap, veh/h	2419	128	398	2719	298	312
Arrive On Green	0.71	0.71	0.03	0.77	0.17	0.17
Sat Flow, veh/h	3513	181	1774	3632	1774	1583
Grp Volume(v), veh/h	529	547	98	859	120	283
Grp Sat Flow(s),veh/h/ln	1770	1831	1774	1770	1774	1583
Q Serve(g_s), s	21.2	21.2	2.5	12.6	10.3	28.6
Cycle Q Clear(g_c), s	21.2	21.2	2.5	12.6	10.3	28.6
Prop In Lane		0.10	1.00		1.00	1.00
Lane Grp Cap(c), veh/h	1252	1295	398	2719	298	312
V/C Ratio(X)	0.42	0.42	0.25	0.32	0.40	0.91
Avail Cap(c_a), veh/h	1252	1295	718	2719	298	312
HCM Platoon Ratio	1.00	1.00	1.00	1.00	1.00	1.00
Upstream Filter(I)	1.00	1.00	0.91	0.91	1.00	1.00
Uniform Delay (d), s/veh	10.4	10.4	7.7	6.0	63.1	66.7
Incr Delay (d2), s/veh	1.0	1.0	0.3	0.1	0.9	28.3
Initial Q Delay(d3),s/veh	0.0	0.0	0.0	0.0	0.0	0.0
%ile BackOfQ(50%),veh/ln	10.6	11.0	1.2	6.1	5.1	15.5
LnGrp Delay(d),s/veh	11.4	11.4	7.9	6.1	63.9	95.0
LnGrp LOS	B	B	A	A	E	F
Approach Vol, veh/h	1076			957	403	
Approach Delay, s/veh	11.4			6.3	85.7	
Approach LOS	B			A	F	

Timer	1	2	3	4	5	6	7	8
Assigned Phs	1	2				6		8
Phs Duration (G+Y+Rc), s	10.4	125.6				136.0		34.0
Change Period (Y+Rc), s	5.4	5.4				5.4		5.4
Max Green Setting (Gmax), s	35.6	89.6				130.6		28.6
Max Q Clear Time (g_c+I1), s	4.5	23.2				14.6		30.6
Green Ext Time (p_c), s	0.2	21.3				22.8		0.0

Intersection Summary	
HCM 2010 Ctrl Delay	21.7
HCM 2010 LOS	C

Movement	EBL	EBT	EBR	WBL	WBT	WBR	NBL	NBT	NBR	SBL	SBT	SBR
Lane Configurations												
Traffic Volume (veh/h)	50	590	50	50	850	50	90	150	130	220	110	40
Future Volume (veh/h)	50	590	50	50	850	50	90	150	130	220	110	40
Number	5	2	12	1	6	16	3	8	18	7	4	14
Initial Q (Qb), veh	0	0	0	0	0	0	0	0	0	0	0	0
Ped-Bike Adj(A_pbT)	1.00		1.00	1.00		1.00	1.00		1.00	1.00		1.00
Parking Bus, Adj	1.00	1.00	1.00	1.00	1.00	1.00	1.00	1.00	1.00	1.00	1.00	1.00
Adj Sat Flow, veh/h/ln	1863	1863	1900	1863	1863	1900	1863	1863	1900	1863	1863	1900
Adj Flow Rate, veh/h	54	641	54	54	924	54	98	163	141	239	120	43
Adj No. of Lanes	1	1	0	1	1	0	1	1	0	1	1	0
Peak Hour Factor	0.92	0.92	0.92	0.92	0.92	0.92	0.92	0.92	0.92	0.92	0.92	0.92
Percent Heavy Veh, %	2	2	2	2	2	2	2	2	2	2	2	2
Cap, veh/h	119	953	80	301	980	57	383	293	254	264	416	149
Arrive On Green	0.56	0.56	0.56	0.56	0.56	0.56	0.32	0.32	0.32	0.32	0.32	0.32
Sat Flow, veh/h	573	1695	143	747	1743	102	1218	923	799	1071	1310	470
Grp Volume(v), veh/h	54	0	695	54	0	978	98	0	304	239	0	163
Grp Sat Flow(s),veh/h/ln	573	0	1838	747	0	1845	1218	0	1722	1071	0	1780
Q Serve(g_s), s	6.1	0.0	24.0	4.9	0.0	44.5	5.9	0.0	13.2	15.4	0.0	6.2
Cycle Q Clear(g_c), s	50.6	0.0	24.0	28.9	0.0	44.5	12.1	0.0	13.2	28.6	0.0	6.2
Prop In Lane	1.00		0.08	1.00		0.06	1.00		0.46	1.00		0.26
Lane Grp Cap(c), veh/h	119	0	1033	301	0	1037	383	0	547	264	0	566
V/C Ratio(X)	0.45	0.00	0.67	0.18	0.00	0.94	0.26	0.00	0.56	0.91	0.00	0.29
Avail Cap(c_a), veh/h	119	0	1033	301	0	1037	383	0	547	264	0	566
HCM Platoon Ratio	1.00	1.00	1.00	1.00	1.00	1.00	1.00	1.00	1.00	1.00	1.00	1.00
Upstream Filter(I)	1.00	0.00	1.00	1.00	0.00	1.00	1.00	0.00	1.00	1.00	0.00	1.00
Uniform Delay (d), s/veh	42.8	0.0	13.9	24.0	0.0	18.4	27.6	0.0	25.4	39.1	0.0	23.1
Incr Delay (d2), s/veh	2.7	0.0	1.7	0.3	0.0	16.1	0.3	0.0	1.2	32.0	0.0	0.3
Initial Q Delay(d3),s/veh	0.0	0.0	0.0	0.0	0.0	0.0	0.0	0.0	0.0	0.0	0.0	0.0
%ile BackOfQ(50%),veh/ln	1.4	0.0	12.5	1.0	0.0	26.9	2.0	0.0	6.4	8.3	0.0	3.1
LnGrp Delay(d),s/veh	45.5	0.0	15.6	24.3	0.0	34.4	27.9	0.0	26.7	71.1	0.0	23.3
LnGrp LOS	D		B	C		C	C		C	E		C
Approach Vol, veh/h		749			1032			402			402	
Approach Delay, s/veh		17.7			33.9			27.0			51.7	
Approach LOS		B			C			C			D	

Timer	1	2	3	4	5	6	7	8
Assigned Phs		2		4		6		8
Phs Duration (G+Y+Rc), s		56.0		34.0		56.0		34.0
Change Period (Y+Rc), s		5.4		5.4		5.4		5.4
Max Green Setting (Gmax), s		50.6		28.6		50.6		28.6
Max Q Clear Time (g_c+I1), s		52.6		30.6		46.5		15.2
Green Ext Time (p_c), s		0.0		0.0		3.5		3.7

Intersection Summary	
HCM 2010 Ctrl Delay	30.9
HCM 2010 LOS	C

Movement	EBL	EBT	EBR	WBL	WBT	WBR	NBL	NBT	NBR	SBL	SBT	SBR
Lane Configurations												
Traffic Volume (veh/h)	38	171	143	92	215	377	107	525	87	433	901	35
Future Volume (veh/h)	38	171	143	92	215	377	107	525	87	433	901	35
Number	5	2	12	1	6	16	3	8	18	7	4	14
Initial Q (Qb), veh	0	0	0	0	0	0	0	0	0	0	0	0
Ped-Bike Adj(A_pbT)	1.00		1.00	1.00		1.00	1.00		1.00	1.00		1.00
Parking Bus, Adj	1.00	1.00	1.00	1.00	1.00	1.00	1.00	1.00	1.00	1.00	1.00	1.00
Adj Sat Flow, veh/h/ln	1863	1863	1900	1863	1863	1863	1863	1863	1900	1863	1863	1900
Adj Flow Rate, veh/h	44	192	174	131	239	433	134	640	114	466	990	40
Adj No. of Lanes	1	1	0	1	1	1	1	2	0	1	2	0
Peak Hour Factor	0.86	0.89	0.82	0.70	0.90	0.87	0.80	0.82	0.76	0.93	0.91	0.88
Percent Heavy Veh, %	2	2	2	2	2	2	2	2	2	2	2	2
Cap, veh/h	263	210	190	221	483	410	290	686	122	501	1318	53
Arrive On Green	0.04	0.23	0.23	0.06	0.26	0.26	0.08	0.23	0.23	0.23	0.38	0.38
Sat Flow, veh/h	1774	902	817	1774	1863	1583	1774	3004	534	1774	3468	140
Grp Volume(v), veh/h	44	0	366	131	239	433	134	377	377	466	505	525
Grp Sat Flow(s),veh/h/ln	1774	0	1719	1774	1863	1583	1774	1770	1768	1774	1770	1838
Q Serve(g_s), s	1.6	0.0	18.2	4.9	9.6	22.7	5.0	18.3	18.3	17.7	21.7	21.7
Cycle Q Clear(g_c), s	1.6	0.0	18.2	4.9	9.6	22.7	5.0	18.3	18.3	17.7	21.7	21.7
Prop In Lane	1.00		0.48	1.00		1.00	1.00		0.30	1.00		0.08
Lane Grp Cap(c), veh/h	263	0	400	221	483	410	290	404	404	501	673	699
V/C Ratio(X)	0.17	0.00	0.92	0.59	0.50	1.06	0.46	0.93	0.93	0.93	0.75	0.75
Avail Cap(c_a), veh/h	298	0	416	221	483	410	302	404	404	533	693	719
HCM Platoon Ratio	1.00	1.00	1.00	1.00	1.00	1.00	1.00	1.00	1.00	1.00	1.00	1.00
Upstream Filter(I)	1.00	0.00	1.00	1.00	1.00	1.00	1.00	1.00	1.00	1.00	1.00	1.00
Uniform Delay (d), s/veh	24.2	0.0	32.8	25.6	27.6	32.5	23.4	33.2	33.2	21.7	23.6	23.6
Incr Delay (d2), s/veh	0.3	0.0	24.1	4.2	0.8	59.8	1.1	28.4	28.9	22.4	4.5	4.3
Initial Q Delay(d3),s/veh	0.0	0.0	0.0	0.0	0.0	0.0	0.0	0.0	0.0	0.0	0.0	0.0
%ile BackOfQ(50%),veh/ln	0.8	0.0	11.3	2.6	5.0	16.7	2.5	12.1	12.2	14.0	11.4	11.8
LnGrp Delay(d),s/veh	24.5	0.0	56.9	29.8	28.4	92.2	24.6	61.6	62.1	44.1	28.0	27.9
LnGrp LOS	C		E	C	C	F	C	E	E	D	C	C
Approach Vol, veh/h		410			803			888			1496	
Approach Delay, s/veh		53.4			63.0			56.2			33.0	
Approach LOS		D			E			E			C	

Timer	1	2	3	4	5	6	7	8
Assigned Phs	1	2	3	4	5	6	7	8
Phs Duration (G+Y+Rc), s	11.0	25.8	12.1	38.7	8.7	28.1	25.4	25.4
Change Period (Y+Rc), s	5.4	5.4	5.4	5.4	5.4	5.4	5.4	5.4
Max Green Setting (Gmax), s	5.6	21.2	7.3	34.3	5.0	21.8	21.6	20.0
Max Q Clear Time (g_c+I1), s	6.9	20.2	7.0	23.7	3.6	24.7	19.7	20.3
Green Ext Time (p_c), s	0.0	0.2	0.0	7.5	0.0	0.0	0.4	0.0

Intersection Summary	
HCM 2010 Ctrl Delay	47.8
HCM 2010 LOS	D

Movement	EBL	EBT	EBR	WBL	WBT	WBR	NBL	NBT	NBR	SBL	SBT	SBR
Lane Configurations												
Traffic Volume (veh/h)	253	623	126	604	1249	629	177	1028	321	553	2197	236
Future Volume (veh/h)	253	623	126	604	1249	629	177	1028	321	553	2197	236
Number	5	2	12	1	6	16	3	8	18	7	4	14
Initial Q (Qb), veh	0	0	0	0	0	0	0	0	0	0	0	0
Ped-Bike Adj(A_pbT)	1.00		1.00	1.00		1.00	1.00		1.00	1.00		1.00
Parking Bus, Adj	1.00	1.00	1.00	1.00	1.00	1.00	1.00	1.00	1.00	1.00	1.00	1.00
Adj Sat Flow, veh/h/ln	1863	1863	1900	1863	1863	1863	1863	1863	1863	1863	1863	1900
Adj Flow Rate, veh/h	312	663	140	679	1403	699	242	1130	412	570	2497	278
Adj No. of Lanes	2	2	0	2	2	1	2	2	1	2	3	0
Peak Hour Factor	0.81	0.94	0.90	0.89	0.89	0.90	0.73	0.91	0.78	0.97	0.88	0.85
Percent Heavy Veh, %	2	2	2	2	2	2	2	2	2	2	2	2
Cap, veh/h	266	710	150	519	1123	752	197	1076	720	541	1883	204
Arrive On Green	0.15	0.49	0.49	0.15	0.32	0.32	0.06	0.30	0.30	0.16	0.40	0.40
Sat Flow, veh/h	3442	2910	614	3442	3539	1583	3442	3539	1583	3442	4660	504
Grp Volume(v), veh/h	312	403	400	679	1403	699	242	1130	412	570	1797	978
Grp Sat Flow(s),veh/h/ln	1721	1770	1754	1721	1770	1583	1721	1770	1583	1721	1695	1774
Q Serve(g_s), s	11.6	32.1	32.2	22.6	47.6	40.3	8.6	45.6	10.2	23.6	60.6	60.6
Cycle Q Clear(g_c), s	11.6	32.1	32.2	22.6	47.6	40.3	8.6	45.6	10.2	23.6	60.6	60.6
Prop In Lane	1.00		0.35	1.00		1.00	1.00		1.00	1.00		0.28
Lane Grp Cap(c), veh/h	266	432	428	519	1123	752	197	1076	720	541	1370	717
V/C Ratio(X)	1.17	0.93	0.93	1.31	1.25	0.93	1.23	1.05	0.57	1.05	1.31	1.36
Avail Cap(c_a), veh/h	266	432	428	519	1123	752	197	1076	720	541	1370	717
HCM Platoon Ratio	2.00	2.00	2.00	1.00	1.00	1.00	1.00	1.00	1.00	1.00	1.00	1.00
Upstream Filter(I)	0.90	0.90	0.90	1.00	1.00	1.00	1.00	1.00	1.00	1.00	1.00	1.00
Uniform Delay (d), s/veh	63.4	37.2	37.3	63.7	51.2	17.2	70.7	52.2	11.7	63.2	44.7	44.7
Incr Delay (d2), s/veh	107.3	27.3	27.8	152.6	119.7	18.0	138.3	41.6	1.1	53.3	145.7	173.1
Initial Q Delay(d3),s/veh	0.0	0.0	0.0	0.0	0.0	0.0	0.0	0.0	0.0	0.0	0.0	0.0
%ile BackOfQ(50%),veh/ln	9.4	18.7	18.6	21.7	41.9	21.2	7.9	28.5	6.6	15.2	56.1	64.1
LnGrp Delay(d),s/veh	170.7	64.6	65.0	216.3	170.9	35.3	209.0	93.8	12.8	116.5	190.4	217.8
LnGrp LOS	F	E	E	F	F	D	F	F	B	F	F	F
Approach Vol, veh/h		1115			2781			1784			3345	
Approach Delay, s/veh		94.5			147.9			90.7			185.8	
Approach LOS		F			F			F			F	

Timer	1	2	3	4	5	6	7	8
Assigned Phs	1	2	3	4	5	6	7	8
Phs Duration (G+Y+Rc), s	28.0	42.0	14.0	66.0	17.0	53.0	29.0	51.0
Change Period (Y+Rc), s	5.4	5.4	5.4	5.4	5.4	5.4	5.4	5.4
Max Green Setting (Gmax), s	22.6	36.6	8.6	60.6	11.6	47.6	23.6	45.6
Max Q Clear Time (g_c+I1), s	24.6	34.2	10.6	62.6	13.6	49.6	25.6	47.6
Green Ext Time (p_c), s	0.0	1.1	0.0	0.0	0.0	0.0	0.0	0.0

Intersection Summary	
HCM 2010 Ctrl Delay	144.1
HCM 2010 LOS	F

Movement	EBL	EBT	EBR	WBL	WBT	WBR	NBL	NBT	NBR	SBL	SBT	SBR
Lane Configurations												
Traffic Volume (veh/h)	120	1400	30	30	2500	120	20	20	20	300	20	30
Future Volume (veh/h)	120	1400	30	30	2500	120	20	20	20	300	20	30
Number	5	2	12	1	6	16	3	8	18	7	4	14
Initial Q (Qb), veh	0	0	0	0	0	0	0	0	0	0	0	0
Ped-Bike Adj(A_pbT)	1.00		1.00	1.00		1.00	1.00		1.00	1.00		1.00
Parking Bus, Adj	1.00	1.00	1.00	1.00	1.00	1.00	1.00	1.00	1.00	1.00	1.00	1.00
Adj Sat Flow, veh/h/ln	1863	1863	1900	1863	1863	1900	1900	1863	1900	1863	1863	1863
Adj Flow Rate, veh/h	130	1522	33	33	2717	130	22	22	22	342	0	33
Adj No. of Lanes	1	3	0	1	3	0	0	1	0	2	0	1
Peak Hour Factor	0.92	0.92	0.92	0.92	0.92	0.92	0.92	0.92	0.92	0.92	0.92	0.92
Percent Heavy Veh, %	2	2	2	2	2	2	2	2	2	2	2	2
Cap, veh/h	151	3462	75	309	3258	154	25	25	25	395	0	176
Arrive On Green	0.09	1.00	1.00	0.02	0.65	0.65	0.04	0.04	0.04	0.11	0.00	0.11
Sat Flow, veh/h	1774	5122	111	1774	4977	235	577	577	577	3548	0	1583
Grp Volume(v), veh/h	130	1007	548	33	1839	1008	66	0	0	342	0	33
Grp Sat Flow(s),veh/h/ln	1774	1695	1843	1774	1695	1821	1732	0	0	1774	0	1583
Q Serve(g_s), s	4.9	0.0	0.0	0.9	61.4	64.2	5.7	0.0	0.0	14.2	0.0	2.8
Cycle Q Clear(g_c), s	4.9	0.0	0.0	0.9	61.4	64.2	5.7	0.0	0.0	14.2	0.0	2.8
Prop In Lane	1.00		0.06	1.00		0.13	0.33		0.33	1.00		1.00
Lane Grp Cap(c), veh/h	151	2291	1246	309	2219	1192	76	0	0	395	0	176
V/C Ratio(X)	0.86	0.44	0.44	0.11	0.83	0.85	0.87	0.00	0.00	0.87	0.00	0.19
Avail Cap(c_a), veh/h	194	2291	1246	326	2219	1192	76	0	0	464	0	207
HCM Platoon Ratio	2.00	2.00	2.00	1.00	1.00	1.00	1.00	1.00	1.00	1.00	1.00	1.00
Upstream Filter(I)	0.92	0.92	0.92	0.73	0.73	0.73	1.00	0.00	0.00	1.00	0.00	1.00
Uniform Delay (d), s/veh	39.3	0.0	0.0	7.9	19.6	20.0	71.3	0.0	0.0	65.6	0.0	60.5
Incr Delay (d2), s/veh	23.9	0.6	1.0	0.1	2.8	5.6	60.3	0.0	0.0	14.1	0.0	0.5
Initial Q Delay(d3),s/veh	0.0	0.0	0.0	0.0	0.0	0.0	0.0	0.0	0.0	0.0	0.0	0.0
%ile BackOfQ(50%),veh/ln	6.2	0.2	0.4	0.4	29.5	34.1	4.0	0.0	0.0	7.8	0.0	1.3
LnGrp Delay(d),s/veh	63.3	0.6	1.0	8.0	22.3	25.6	131.6	0.0	0.0	79.7	0.0	61.0
LnGrp LOS	E	A	A	A	C	C	F			E		E
Approach Vol, veh/h		1685			2880			66			375	
Approach Delay, s/veh		5.6			23.3			131.6			78.0	
Approach LOS		A			C			F			E	

Timer	1	2	3	4	5	6	7	8
Assigned Phs	1	2		4	5	6		8
Phs Duration (G+Y+Rc), s	9.1	106.8		22.1	12.3	103.6		12.0
Change Period (Y+Rc), s	5.4	5.4		5.4	5.4	5.4		5.4
Max Green Setting (Gmax), s	5.2	97.0		19.6	10.6	91.6		6.6
Max Q Clear Time (g_c+I1), s	2.9	2.0		16.2	6.9	66.2		7.7
Green Ext Time (p_c), s	0.0	87.7		0.5	0.1	24.8		0.0

Intersection Summary	
HCM 2010 Ctrl Delay	22.9
HCM 2010 LOS	C

Notes

User approved volume balancing among the lanes for turning movement.

Movement	EBL	EBT	EBR	WBL	WBT	WBR	NBL	NBT	NBR	SBL	SBT	SBR
Lane Configurations												
Traffic Volume (veh/h)	710	834	356	209	1542	25	242	564	128	97	763	325
Future Volume (veh/h)	710	834	356	209	1542	25	242	564	128	97	763	325
Number	5	2	12	1	6	16	3	8	18	7	4	14
Initial Q (Qb), veh	0	0	0	0	0	0	0	0	0	0	0	0
Ped-Bike Adj(A_pbT)	1.00		1.00	1.00		1.00	1.00		1.00	1.00		1.00
Parking Bus, Adj	1.00	1.00	1.00	1.00	1.00	1.00	1.00	1.00	1.00	1.00	1.00	1.00
Adj Sat Flow, veh/h/ln	1863	1863	1863	1863	1863	1863	1863	1863	1863	1863	1863	1863
Adj Flow Rate, veh/h	798	970	0	227	1623	0	269	627	164	111	820	0
Adj No. of Lanes	2	2	1	2	2	1	2	2	1	1	2	1
Peak Hour Factor	0.89	0.86	0.84	0.92	0.95	0.69	0.90	0.90	0.78	0.87	0.93	0.86
Percent Heavy Veh, %	2	2	2	2	2	2	2	2	2	2	2	2
Cap, veh/h	679	1798	804	276	1383	619	243	736	456	180	698	312
Arrive On Green	0.20	0.51	0.00	0.08	0.39	0.00	0.07	0.21	0.21	0.06	0.20	0.00
Sat Flow, veh/h	3442	3539	1583	3442	3539	1583	3442	3539	1583	1774	3539	1583
Grp Volume(v), veh/h	798	970	0	227	1623	0	269	627	164	111	820	0
Grp Sat Flow(s),veh/h/ln	1721	1770	1583	1721	1770	1583	1721	1770	1583	1774	1770	1583
Q Serve(g_s), s	29.6	27.9	0.0	9.7	58.6	0.0	10.6	25.6	12.3	7.4	29.6	0.0
Cycle Q Clear(g_c), s	29.6	27.9	0.0	9.7	58.6	0.0	10.6	25.6	12.3	7.4	29.6	0.0
Prop In Lane	1.00		1.00	1.00		1.00	1.00		1.00	1.00		1.00
Lane Grp Cap(c), veh/h	679	1798	804	276	1383	619	243	736	456	180	698	312
V/C Ratio(X)	1.17	0.54	0.00	0.82	1.17	0.00	1.11	0.85	0.36	0.62	1.17	0.00
Avail Cap(c_a), veh/h	679	1798	804	365	1383	619	243	736	456	180	698	312
HCM Platoon Ratio	1.00	1.00	1.00	1.00	1.00	1.00	1.00	1.00	1.00	1.00	1.00	1.00
Upstream Filter(I)	1.00	1.00	0.00	0.74	0.74	0.00	1.00	1.00	1.00	1.00	1.00	0.00
Uniform Delay (d), s/veh	60.2	25.0	0.0	67.9	45.7	0.0	69.7	57.2	42.4	46.4	60.2	0.0
Incr Delay (d2), s/veh	93.7	0.3	0.0	8.3	84.2	0.0	89.1	9.4	0.5	6.2	93.0	0.0
Initial Q Delay(d3),s/veh	0.0	0.0	0.0	0.0	0.0	0.0	0.0	0.0	0.0	0.0	0.0	0.0
%ile BackOfQ(50%),veh/ln	22.9	13.7	0.0	5.0	44.8	0.0	8.0	13.5	5.5	3.9	23.5	0.0
LnGrp Delay(d),s/veh	153.9	25.3	0.0	76.2	129.9	0.0	158.8	66.6	42.9	52.6	153.2	0.0
LnGrp LOS	F	C		E	F		F	E	D	D	F	
Approach Vol, veh/h		1768			1850			1060			931	
Approach Delay, s/veh		83.4			123.4			86.3			141.2	
Approach LOS		F			F			F			F	

Timer	1	2	3	4	5	6	7	8
Assigned Phs	1	2	3	4	5	6	7	8
Phs Duration (G+Y+Rc), s	17.4	81.6	16.0	35.0	35.0	64.0	14.4	36.6
Change Period (Y+Rc), s	5.4	5.4	5.4	5.4	5.4	5.4	5.4	5.4
Max Green Setting (Gmax), s	15.9	72.3	10.6	29.6	29.6	58.6	9.0	31.2
Max Q Clear Time (g_c+I1), s	11.7	29.9	12.6	31.6	31.6	60.6	9.4	27.6
Green Ext Time (p_c), s	0.3	13.2	0.0	0.0	0.0	0.0	0.0	2.7

Intersection Summary	
HCM 2010 Ctrl Delay	106.7
HCM 2010 LOS	F

Movement	EBL	EBT	EBR	WBL	WBT	WBR	NBL	NBT	NBR	SBL	SBT	SBR
Lane Configurations												
Traffic Volume (veh/h)	0	860	188	202	1301	0	0	0	0	407	22	332
Future Volume (veh/h)	0	860	188	202	1301	0	0	0	0	407	22	332
Number	5	2	12	1	6	16				7	4	14
Initial Q (Qb), veh	0	0	0	0	0	0				0	0	0
Ped-Bike Adj(A_pbT)	1.00		1.00	1.00		1.00				1.00		1.00
Parking Bus, Adj	1.00	1.00	1.00	1.00	1.00	1.00				1.00	1.00	1.00
Adj Sat Flow, veh/h/ln	0	1863	1863	1863	1863	0				1863	1863	1863
Adj Flow Rate, veh/h	0	1024	0	252	1369	0				475	0	0
Adj No. of Lanes	0	4	1	2	2	0				2	0	1
Peak Hour Factor	1.00	0.84	0.92	0.80	0.95	1.00				0.91	0.56	0.90
Percent Heavy Veh, %	0	2	2	2	2	0				2	2	2
Cap, veh/h	0	4150	1025	305	2733	0				553	0	247
Arrive On Green	0.00	0.65	0.00	0.09	0.77	0.00				0.16	0.00	0.00
Sat Flow, veh/h	0	6669	1583	3442	3632	0				3548	0	1583
Grp Volume(v), veh/h	0	1024	0	252	1369	0				475	0	0
Grp Sat Flow(s),veh/h/ln	0	1602	1583	1721	1770	0				1774	0	1583
Q Serve(g_s), s	0.0	10.1	0.0	10.8	21.6	0.0				19.6	0.0	0.0
Cycle Q Clear(g_c), s	0.0	10.1	0.0	10.8	21.6	0.0				19.6	0.0	0.0
Prop In Lane	0.00		1.00	1.00		0.00				1.00		1.00
Lane Grp Cap(c), veh/h	0	4150	1025	305	2733	0				553	0	247
V/C Ratio(X)	0.00	0.25	0.00	0.83	0.50	0.00				0.86	0.00	0.00
Avail Cap(c_a), veh/h	0	4150	1025	473	2733	0				1292	0	576
HCM Platoon Ratio	1.00	1.00	1.00	1.00	1.00	1.00				1.00	1.00	1.00
Upstream Filter(I)	0.00	0.83	0.00	0.88	0.88	0.00				1.00	0.00	0.00
Uniform Delay (d), s/veh	0.0	11.1	0.0	67.2	6.3	0.0				61.7	0.0	0.0
Incr Delay (d2), s/veh	0.0	0.1	0.0	6.1	0.6	0.0				4.0	0.0	0.0
Initial Q Delay(d3),s/veh	0.0	0.0	0.0	0.0	0.0	0.0				0.0	0.0	0.0
%ile BackOfQ(50%),veh/ln	0.0	4.4	0.0	5.4	10.7	0.0				9.9	0.0	0.0
LnGrp Delay(d),s/veh	0.0	11.2	0.0	73.3	6.9	0.0				65.8	0.0	0.0
LnGrp LOS		B		E	A					E		
Approach Vol, veh/h		1024			1621						475	
Approach Delay, s/veh		11.2			17.2						65.8	
Approach LOS		B			B						E	

Timer	1	2	3	4	5	6	7	8
Assigned Phs	1	2		4		6		
Phs Duration (G+Y+Rc), s	18.7	102.5		28.8		121.2		
Change Period (Y+Rc), s	5.4	5.4		5.4		5.4		
Max Green Setting (Gmax), s	20.6	58.6		54.6		84.6		
Max Q Clear Time (g_c+I1), s	12.8	12.1		21.6		23.6		
Green Ext Time (p_c), s	0.5	28.2		1.8		32.7		

Intersection Summary	
HCM 2010 Ctrl Delay	22.6
HCM 2010 LOS	C

Notes

User approved volume balancing among the lanes for turning movement.

Movement	EBL	EBT	EBR	WBL	WBT	WBR	NBL	NBT	NBR	SBL	SBT	SBR
Lane Configurations												
Traffic Volume (veh/h)	168	1066	0	0	1284	454	167	95	194	0	0	0
Future Volume (veh/h)	168	1066	0	0	1284	454	167	95	194	0	0	0
Number	5	2	12	1	6	16	3	8	18			
Initial Q (Qb), veh	0	0	0	0	0	0	0	0	0			
Ped-Bike Adj(A_pbT)	1.00		1.00	1.00		1.00	1.00		1.00			
Parking Bus, Adj	1.00	1.00	1.00	1.00	1.00	1.00	1.00	1.00	1.00			
Adj Sat Flow, veh/h/ln	1863	1863	0	0	1863	1900	1863	1863	1863			
Adj Flow Rate, veh/h	193	1198	0	0	1352	0	194	112	0			
Adj No. of Lanes	2	2	0	0	4	0	2	1	1			
Peak Hour Factor	0.87	0.89	1.00	1.00	0.95	0.91	0.86	0.85	0.84			
Percent Heavy Veh, %	2	2	0	0	2	2	2	2	2			
Cap, veh/h	1080	2998	0	0	3187	0	287	151	128			
Arrive On Green	0.63	1.00	0.00	0.00	0.50	0.00	0.08	0.08	0.00			
Sat Flow, veh/h	3442	3632	0	0	6929	0	3548	1863	1583			
Grp Volume(v), veh/h	193	1198	0	0	1352	0	194	112	0			
Grp Sat Flow(s),veh/h/ln	1721	1770	0	0	1602	0	1774	1863	1583			
Q Serve(g_s), s	3.5	0.0	0.0	0.0	20.2	0.0	8.0	8.8	0.0			
Cycle Q Clear(g_c), s	3.5	0.0	0.0	0.0	20.2	0.0	8.0	8.8	0.0			
Prop In Lane	1.00		0.00	0.00		0.00	1.00		1.00			
Lane Grp Cap(c), veh/h	1080	2998	0	0	3187	0	287	151	128			
V/C Ratio(X)	0.18	0.40	0.00	0.00	0.42	0.00	0.68	0.74	0.00			
Avail Cap(c_a), veh/h	1080	2998	0	0	3187	0	937	492	418			
HCM Platoon Ratio	2.00	2.00	1.00	1.00	1.00	1.00	1.00	1.00	1.00			
Upstream Filter(I)	0.94	0.94	0.00	0.00	1.00	0.00	1.00	1.00	0.00			
Uniform Delay (d), s/veh	19.8	0.0	0.0	0.0	24.0	0.0	67.0	67.4	0.0			
Incr Delay (d2), s/veh	0.1	0.4	0.0	0.0	0.4	0.0	2.8	7.0	0.0			
Initial Q Delay(d3),s/veh	0.0	0.0	0.0	0.0	0.0	0.0	0.0	0.0	0.0			
%ile BackOfQ(50%),veh/ln	1.7	0.2	0.0	0.0	9.0	0.0	4.0	4.8	0.0			
LnGrp Delay(d),s/veh	19.9	0.4	0.0	0.0	24.4	0.0	69.8	74.5	0.0			
LnGrp LOS	B	A			C		E	E				
Approach Vol, veh/h		1391			1352			306				
Approach Delay, s/veh		3.1			24.4			71.5				
Approach LOS		A			C			E				

Timer	1	2	3	4	5	6	7	8
Assigned Phs		2			5	6		8
Phs Duration (G+Y+Rc), s		132.5			52.5	80.0		17.5
Change Period (Y+Rc), s		5.4			5.4	5.4		5.4
Max Green Setting (Gmax), s		99.6			19.6	74.6		39.6
Max Q Clear Time (g_c+I1), s		2.0			5.5	22.2		10.8
Green Ext Time (p_c), s		12.9			7.5	12.4		1.3

Intersection Summary	
HCM 2010 Ctrl Delay	19.4
HCM 2010 LOS	B

Notes

User approved volume balancing among the lanes for turning movement.

User approved ignoring U-Turning movement.

Movement	EBL	EBT	EBR	WBL	WBT	WBR	NBL	NBT	NBR	SBL	SBT	SBR
Lane Configurations												
Traffic Volume (veh/h)	94	778	296	242	1445	68	235	233	53	69	296	73
Future Volume (veh/h)	94	778	296	242	1445	68	235	233	53	69	296	73
Number	5	2	12	1	6	16	3	8	18	7	4	14
Initial Q (Qb), veh	0	0	0	0	0	0	0	0	0	0	0	0
Ped-Bike Adj(A_pbT)	1.00		1.00	1.00		1.00	1.00		1.00	1.00		1.00
Parking Bus, Adj	1.00	1.00	1.00	1.00	1.00	1.00	1.00	1.00	1.00	1.00	1.00	1.00
Adj Sat Flow, veh/h/ln	1863	1863	1900	1863	1863	1900	1863	1863	1863	1863	1863	1863
Adj Flow Rate, veh/h	112	855	344	252	1490	106	267	291	63	95	333	87
Adj No. of Lanes	1	2	0	1	2	0	1	1	1	1	1	1
Peak Hour Factor	0.84	0.91	0.86	0.96	0.97	0.64	0.88	0.80	0.84	0.73	0.89	0.84
Percent Heavy Veh, %	2	2	2	2	2	2	2	2	2	2	2	2
Cap, veh/h	157	1109	444	280	1650	117	285	503	570	269	359	380
Arrive On Green	0.05	0.45	0.45	0.09	0.49	0.49	0.12	0.27	0.27	0.05	0.19	0.19
Sat Flow, veh/h	1774	2468	989	1774	3353	237	1774	1863	1583	1774	1863	1583
Grp Volume(v), veh/h	112	612	587	252	783	813	267	291	63	95	333	87
Grp Sat Flow(s),veh/h/ln	1774	1770	1688	1774	1770	1821	1774	1863	1583	1774	1863	1583
Q Serve(g_s), s	5.1	43.7	44.0	11.1	60.4	61.5	17.8	20.3	4.0	6.5	26.4	6.6
Cycle Q Clear(g_c), s	5.1	43.7	44.0	11.1	60.4	61.5	17.8	20.3	4.0	6.5	26.4	6.6
Prop In Lane	1.00		0.59	1.00		0.13	1.00		1.00	1.00		1.00
Lane Grp Cap(c), veh/h	157	795	758	280	871	896	285	503	570	269	359	380
V/C Ratio(X)	0.71	0.77	0.77	0.90	0.90	0.91	0.94	0.58	0.11	0.35	0.93	0.23
Avail Cap(c_a), veh/h	164	795	758	352	871	896	285	512	577	269	368	387
HCM Platoon Ratio	1.00	1.00	1.00	1.00	1.00	1.00	1.00	1.00	1.00	1.00	1.00	1.00
Upstream Filter(I)	1.00	1.00	1.00	0.67	0.67	0.67	1.00	1.00	1.00	1.00	1.00	1.00
Uniform Delay (d), s/veh	34.0	34.8	34.9	30.2	34.7	34.9	42.7	47.3	32.0	46.1	59.5	45.9
Incr Delay (d2), s/veh	12.9	7.1	7.6	15.9	10.1	10.5	37.2	1.6	0.1	0.8	28.8	0.3
Initial Q Delay(d3),s/veh	0.0	0.0	0.0	0.0	0.0	0.0	0.0	0.0	0.0	0.0	0.0	0.0
%ile BackOfQ(50%),veh/ln	3.1	22.8	22.1	6.6	31.8	33.3	11.5	10.6	1.7	3.2	16.5	2.9
LnGrp Delay(d),s/veh	46.9	41.9	42.4	46.1	44.8	45.4	79.9	48.9	32.1	46.9	88.3	46.2
LnGrp LOS	D	D	D	D	D	D	E	D	C	D	F	D
Approach Vol, veh/h		1311			1848			621			515	
Approach Delay, s/veh		42.6			45.2			60.5			73.6	
Approach LOS		D			D			E			E	

Timer	1	2	3	4	5	6	7	8
Assigned Phs	1	2	3	4	5	6	7	8
Phs Duration (G+Y+Rc), s	18.9	72.8	24.0	34.3	12.4	79.2	12.4	45.9
Change Period (Y+Rc), s	5.4	5.4	5.4	5.4	5.4	5.4	5.4	5.4
Max Green Setting (Gmax), s	19.6	60.6	18.6	29.6	7.6	72.6	7.0	41.2
Max Q Clear Time (g_c+I1), s	13.1	46.0	19.8	28.4	7.1	63.5	8.5	22.3
Green Ext Time (p_c), s	0.4	12.6	0.0	0.6	0.0	8.3	0.0	4.2

Intersection Summary	
HCM 2010 Ctrl Delay	50.0
HCM 2010 LOS	D

Movement	EBL	EBT	WBT	WBR	SBL	SBR
Lane Configurations						
Traffic Volume (veh/h)	38	866	1744	86	212	69
Future Volume (veh/h)	38	866	1744	86	212	69
Number	5	2	6	16	7	14
Initial Q (Qb), veh	0	0	0	0	0	0
Ped-Bike Adj(A_pbT)	1.00			1.00	1.00	1.00
Parking Bus, Adj	1.00	1.00	1.00	1.00	1.00	1.00
Adj Sat Flow, veh/h/ln	1863	1863	1863	1900	1863	1863
Adj Flow Rate, veh/h	49	941	1762	102	259	93
Adj No. of Lanes	1	2	2	0	1	1
Peak Hour Factor	0.77	0.92	0.99	0.84	0.82	0.74
Percent Heavy Veh, %	2	2	2	2	2	2
Cap, veh/h	173	2713	2608	150	286	256
Arrive On Green	1.00	1.00	0.77	0.77	0.16	0.16
Sat Flow, veh/h	245	3632	3496	195	1774	1583
Grp Volume(v), veh/h	49	941	910	954	259	93
Grp Sat Flow(s),veh/h/ln	245	1770	1770	1828	1774	1583
Q Serve(g_s), s	13.5	0.0	37.0	38.2	21.5	7.8
Cycle Q Clear(g_c), s	51.8	0.0	37.0	38.2	21.5	7.8
Prop In Lane	1.00			0.11	1.00	1.00
Lane Grp Cap(c), veh/h	173	2713	1357	1402	286	256
V/C Ratio(X)	0.28	0.35	0.67	0.68	0.90	0.36
Avail Cap(c_a), veh/h	173	2713	1357	1402	374	334
HCM Platoon Ratio	2.00	2.00	1.00	1.00	1.00	1.00
Upstream Filter(I)	0.55	0.55	0.52	0.52	1.00	1.00
Uniform Delay (d), s/veh	8.6	0.0	8.4	8.6	61.8	56.0
Incr Delay (d2), s/veh	2.2	0.2	0.7	0.7	20.8	0.9
Initial Q Delay(d3),s/veh	0.0	0.0	0.0	0.0	0.0	0.0
%ile BackOfQ(50%),veh/ln	1.0	0.1	18.2	19.4	12.2	3.5
LnGrp Delay(d),s/veh	10.8	0.2	9.1	9.3	82.6	56.9
LnGrp LOS	B	A	A	A	F	E
Approach Vol, veh/h		990	1864		352	
Approach Delay, s/veh		0.7	9.2		75.8	
Approach LOS		A	A		E	

Timer	1	2	3	4	5	6	7	8
Assigned Phs		2		4		6		
Phs Duration (G+Y+Rc), s		120.4		29.6		120.4		
Change Period (Y+Rc), s		5.4		5.4		5.4		
Max Green Setting (Gmax), s		107.6		31.6		107.6		
Max Q Clear Time (g_c+I1), s		53.8		23.5		40.2		
Green Ext Time (p_c), s		39.7		0.7		46.4		

Intersection Summary	
HCM 2010 Ctrl Delay	13.9
HCM 2010 LOS	B

Movement	EBL	EBT	EBR	WBL	WBT	WBR	NBL	NBT	NBR	SBL	SBT	SBR
Lane Configurations												
Traffic Volume (veh/h)	251	636	12	11	1656	39	71	6	10	140	3	389
Future Volume (veh/h)	251	636	12	11	1656	39	71	6	10	140	3	389
Number	5	2	12	1	6	16	3	8	18	7	4	14
Initial Q (Qb), veh	0	0	0	0	0	0	0	0	0	0	0	0
Ped-Bike Adj(A_pbT)	1.00		1.00	1.00		1.00	1.00		1.00	1.00		1.00
Parking Bus, Adj	1.00	1.00	1.00	1.00	1.00	1.00	1.00	1.00	1.00	1.00	1.00	1.00
Adj Sat Flow, veh/h/ln	1863	1863	1900	1863	1863	1900	1900	1863	1863	1900	1863	1863
Adj Flow Rate, veh/h	289	707	17	13	1861	55	116	19	13	163	8	427
Adj No. of Lanes	1	2	0	1	2	0	0	1	1	0	1	1
Peak Hour Factor	0.87	0.90	0.69	0.83	0.89	0.71	0.61	0.31	0.75	0.86	0.38	0.91
Percent Heavy Veh, %	2	2	2	2	2	2	2	2	2	2	2	2
Cap, veh/h	311	2628	63	462	2002	59	303	42	291	307	13	509
Arrive On Green	0.14	0.74	0.74	0.57	0.57	0.57	0.18	0.18	0.18	0.18	0.18	0.18
Sat Flow, veh/h	1774	3532	85	727	3511	103	1406	230	1583	1413	69	1583
Grp Volume(v), veh/h	289	354	370	13	934	982	135	0	13	171	0	427
Grp Sat Flow(s),veh/h/ln	1774	1770	1848	727	1770	1845	1636	0	1583	1482	0	1583
Q Serve(g_s), s	18.4	9.6	9.6	1.2	72.0	73.4	0.0	0.0	1.0	5.2	0.0	27.6
Cycle Q Clear(g_c), s	18.4	9.6	9.6	1.2	72.0	73.4	10.0	0.0	1.0	15.2	0.0	27.6
Prop In Lane	1.00		0.05	1.00		0.06	0.86		1.00	0.95		1.00
Lane Grp Cap(c), veh/h	311	1317	1375	462	1009	1052	346	0	291	320	0	509
V/C Ratio(X)	0.93	0.27	0.27	0.03	0.93	0.93	0.39	0.00	0.04	0.54	0.00	0.84
Avail Cap(c_a), veh/h	341	1317	1375	462	1009	1052	346	0	291	320	0	509
HCM Platoon Ratio	1.00	1.00	1.00	1.00	1.00	1.00	1.00	1.00	1.00	1.00	1.00	1.00
Upstream Filter(I)	0.95	0.95	0.95	1.00	1.00	1.00	1.00	0.00	1.00	1.00	0.00	1.00
Uniform Delay (d), s/veh	51.5	6.1	6.1	14.1	29.3	29.6	54.0	0.0	50.4	55.9	0.0	47.2
Incr Delay (d2), s/veh	28.7	0.5	0.5	0.1	15.2	15.8	0.7	0.0	0.1	1.7	0.0	11.8
Initial Q Delay(d3),s/veh	0.0	0.0	0.0	0.0	0.0	0.0	0.0	0.0	0.0	0.0	0.0	0.0
%ile BackOfQ(50%),veh/ln	14.3	4.8	5.0	0.2	39.3	41.7	5.0	0.0	0.4	6.7	0.0	18.1
LnGrp Delay(d),s/veh	80.3	6.6	6.6	14.2	44.5	45.4	54.7	0.0	50.4	57.7	0.0	59.0
LnGrp LOS	F	A	A	B	D	D	D		D	E		E
Approach Vol, veh/h		1013			1929			148			598	
Approach Delay, s/veh		27.6			44.8			54.4			58.6	
Approach LOS		C			D			D			E	

Timer	1	2	3	4	5	6	7	8
Assigned Phs		2		4	5	6		8
Phs Duration (G+Y+Rc), s		117.0		33.0	26.1	90.9		33.0
Change Period (Y+Rc), s		5.4		5.4	5.4	5.4		5.4
Max Green Setting (Gmax), s		111.6		27.6	23.2	83.0		27.6
Max Q Clear Time (g_c+I1), s		11.6		29.6	20.4	75.4		12.0
Green Ext Time (p_c), s		47.0		0.0	0.2	6.9		3.1

Intersection Summary	
HCM 2010 Ctrl Delay	42.7
HCM 2010 LOS	D

Movement	EBL	EBT	EBR	WBL	WBT	WBR	NBL	NBT	NBR	SBL	SBT	SBR
Lane Configurations												
Traffic Volume (veh/h)	363	166	288	261	332	29	327	1465	83	75	2908	455
Future Volume (veh/h)	363	166	288	261	332	29	327	1465	83	75	2908	455
Number	5	2	12	1	6	16	3	8	18	7	4	14
Initial Q (Qb), veh	0	0	0	0	0	0	0	0	0	0	0	0
Ped-Bike Adj(A_pbT)	1.00		1.00	1.00		1.00	1.00		1.00	1.00		1.00
Parking Bus, Adj	1.00	1.00	1.00	1.00	1.00	1.00	1.00	1.00	1.00	1.00	1.00	1.00
Adj Sat Flow, veh/h/ln	1863	1863	1863	1863	1863	1900	1863	1863	1900	1863	1863	1863
Adj Flow Rate, veh/h	408	195	0	239	464	41	363	1526	104	101	3196	548
Adj No. of Lanes	2	1	1	1	2	0	2	3	0	1	3	1
Peak Hour Factor	0.89	0.85	0.86	0.85	0.90	0.70	0.90	0.96	0.80	0.74	0.91	0.83
Percent Heavy Veh, %	2	2	2	2	2	2	2	2	2	2	2	2
Cap, veh/h	440	231	196	220	419	37	312	2744	187	199	2631	819
Arrive On Green	0.04	0.04	0.00	0.12	0.12	0.12	0.09	0.56	0.56	0.04	0.52	0.52
Sat Flow, veh/h	3548	1863	1583	1774	3376	297	3442	4863	331	1774	5085	1583
Grp Volume(v), veh/h	408	195	0	239	255	250	363	1064	566	101	3196	548
Grp Sat Flow(s),veh/h/ln	1774	1863	1583	1774	1863	1810	1721	1695	1804	1774	1695	1583
Q Serve(g_s), s	17.2	15.6	0.0	18.6	18.6	18.6	13.6	29.9	29.9	4.6	77.6	38.3
Cycle Q Clear(g_c), s	17.2	15.6	0.0	18.6	18.6	18.6	13.6	29.9	29.9	4.6	77.6	38.3
Prop In Lane	1.00		1.00	1.00		0.16	1.00		0.18	1.00		1.00
Lane Grp Cap(c), veh/h	440	231	196	220	231	224	312	1913	1018	199	2631	819
V/C Ratio(X)	0.93	0.84	0.00	1.09	1.11	1.11	1.16	0.56	0.56	0.51	1.21	0.67
Avail Cap(c_a), veh/h	440	231	196	220	231	224	312	1913	1018	268	2631	819
HCM Platoon Ratio	0.33	0.33	0.33	1.00	1.00	1.00	1.00	1.00	1.00	1.00	1.00	1.00
Upstream Filter(I)	1.00	1.00	0.00	1.00	1.00	1.00	1.00	1.00	1.00	1.00	1.00	1.00
Uniform Delay (d), s/veh	71.3	70.5	0.0	65.7	65.7	65.7	68.2	20.8	20.8	25.4	36.2	26.7
Incr Delay (d2), s/veh	28.1	29.7	0.0	85.6	90.3	93.5	102.8	0.4	0.7	2.0	100.4	2.1
Initial Q Delay(d3),s/veh	0.0	0.0	0.0	0.0	0.0	0.0	0.0	0.0	0.0	0.0	0.0	0.0
%ile BackOfQ(50%),veh/ln	10.2	10.0	0.0	14.3	15.4	15.1	10.9	14.0	15.0	2.4	60.5	17.2
LnGrp Delay(d),s/veh	99.3	100.2	0.0	151.3	156.0	159.2	171.0	21.1	21.4	27.4	136.6	28.8
LnGrp LOS	F	F		F	F	F	F	C	C	C	F	C
Approach Vol, veh/h		603			744			1993			3845	
Approach Delay, s/veh		99.6			155.6			48.5			118.4	
Approach LOS		F			F			D			F	

Timer	1	2	3	4	5	6	7	8
Assigned Phs		2	3	4		6	7	8
Phs Duration (G+Y+Rc), s		24.0	19.0	83.0		24.0	12.0	90.0
Change Period (Y+Rc), s		5.4	5.4	5.4		5.4	5.4	5.4
Max Green Setting (Gmax), s		18.6	13.6	77.6		18.6	12.4	78.8
Max Q Clear Time (g_c+I1), s		19.2	15.6	79.6		20.6	6.6	31.9
Green Ext Time (p_c), s		0.0	0.0	0.0		0.0	0.1	20.9

Intersection Summary	
HCM 2010 Ctrl Delay	101.3
HCM 2010 LOS	F

Notes

User approved volume balancing among the lanes for turning movement.

Movement	EBL	EBT	EBR	WBL	WBT	WBR	NBL	NBT	NBR	SBL	SBT	SBR
Lane Configurations												
Traffic Volume (veh/h)	23	272	37	19	481	45	29	33	9	62	129	116
Future Volume (veh/h)	23	272	37	19	481	45	29	33	9	62	129	116
Number	5	2	12	1	6	16	3	8	18	7	4	14
Initial Q (Qb), veh	0	0	0	0	0	0	0	0	0	0	0	0
Ped-Bike Adj(A_pbT)	1.00		1.00	1.00		1.00	1.00		1.00	1.00		1.00
Parking Bus, Adj	1.00	1.00	1.00	1.00	1.00	1.00	1.00	1.00	1.00	1.00	1.00	1.00
Adj Sat Flow, veh/h/ln	1863	1863	1900	1863	1863	1900	1863	1863	1900	1863	1863	1900
Adj Flow Rate, veh/h	32	309	52	28	559	56	41	52	12	84	136	171
Adj No. of Lanes	1	1	0	1	1	0	1	1	0	1	1	0
Peak Hour Factor	0.72	0.88	0.71	0.68	0.86	0.80	0.70	0.63	0.75	0.74	0.95	0.68
Percent Heavy Veh, %	2	2	2	2	2	2	2	2	2	2	2	2
Cap, veh/h	246	637	107	423	678	68	217	290	67	428	162	204
Arrive On Green	0.03	0.41	0.41	0.03	0.41	0.41	0.04	0.20	0.20	0.06	0.22	0.22
Sat Flow, veh/h	1774	1555	262	1774	1666	167	1774	1465	338	1774	751	945
Grp Volume(v), veh/h	32	0	361	28	0	615	41	0	64	84	0	307
Grp Sat Flow(s),veh/h/ln	1774	0	1817	1774	0	1833	1774	0	1803	1774	0	1696
Q Serve(g_s), s	0.7	0.0	10.4	0.6	0.0	21.2	1.3	0.0	2.1	2.6	0.0	12.3
Cycle Q Clear(g_c), s	0.7	0.0	10.4	0.6	0.0	21.2	1.3	0.0	2.1	2.6	0.0	12.3
Prop In Lane	1.00		0.14	1.00		0.09	1.00		0.19	1.00		0.56
Lane Grp Cap(c), veh/h	246	0	745	423	0	746	217	0	357	428	0	367
V/C Ratio(X)	0.13	0.00	0.48	0.07	0.00	0.82	0.19	0.00	0.18	0.20	0.00	0.84
Avail Cap(c_a), veh/h	316	0	988	497	0	997	278	0	484	472	0	469
HCM Platoon Ratio	1.00	1.00	1.00	1.00	1.00	1.00	1.00	1.00	1.00	1.00	1.00	1.00
Upstream Filter(I)	1.00	0.00	1.00	1.00	0.00	1.00	1.00	0.00	1.00	1.00	0.00	1.00
Uniform Delay (d), s/veh	14.6	0.0	15.4	12.2	0.0	18.8	22.0	0.0	23.6	20.7	0.0	26.6
Incr Delay (d2), s/veh	0.2	0.0	0.5	0.1	0.0	4.3	0.4	0.0	0.2	0.2	0.0	10.2
Initial Q Delay(d3),s/veh	0.0	0.0	0.0	0.0	0.0	0.0	0.0	0.0	0.0	0.0	0.0	0.0
%ile BackOfQ(50%),veh/ln	0.4	0.0	5.2	0.3	0.0	11.5	0.6	0.0	1.1	1.3	0.0	6.7
LnGrp Delay(d),s/veh	14.9	0.0	15.9	12.2	0.0	23.1	22.4	0.0	23.8	20.9	0.0	36.7
LnGrp LOS	B		B	B		C	C		C	C		D
Approach Vol, veh/h		393			643			105			391	
Approach Delay, s/veh		15.8			22.6			23.3			33.3	
Approach LOS		B			C			C			C	

Timer	1	2	3	4	5	6	7	8
Assigned Phs	1	2	3	4	5	6	7	8
Phs Duration (G+Y+Rc), s	7.5	34.4	8.2	20.7	7.7	34.2	9.4	19.4
Change Period (Y+Rc), s	5.4	5.4	5.4	5.4	5.4	5.4	5.4	5.4
Max Green Setting (Gmax), s	5.1	38.5	5.2	19.6	5.1	38.5	5.8	19.0
Max Q Clear Time (g_c+I1), s	2.6	12.4	3.3	14.3	2.7	23.2	4.6	4.1
Green Ext Time (p_c), s	0.0	6.9	0.0	1.0	0.0	5.6	0.0	2.0

Intersection Summary	
HCM 2010 Ctrl Delay	23.6
HCM 2010 LOS	C

Movement	EBL	EBT	EBR	WBL	WBT	WBR	NBL	NBT	NBR	SBL	SBT	SBR
Lane Configurations												
Traffic Volume (veh/h)	32	280	63	332	430	21	55	174	29	32	493	69
Future Volume (veh/h)	32	280	63	332	430	21	55	174	29	32	493	69
Number	5	2	12	1	6	16	3	8	18	7	4	14
Initial Q (Qb), veh	0	0	0	0	0	0	0	0	0	0	0	0
Ped-Bike Adj(A_pbT)	1.00		1.00	1.00		1.00	1.00		1.00	1.00		1.00
Parking Bus, Adj	1.00	1.00	1.00	1.00	1.00	1.00	1.00	1.00	1.00	1.00	1.00	1.00
Adj Sat Flow, veh/h/ln	1863	1863	1900	1863	1863	1900	1863	1863	1900	1863	1863	1900
Adj Flow Rate, veh/h	40	326	95	382	524	30	64	200	36	48	560	84
Adj No. of Lanes	1	1	0	1	1	0	1	1	0	1	1	0
Peak Hour Factor	0.80	0.86	0.66	0.87	0.82	0.71	0.86	0.87	0.81	0.67	0.88	0.82
Percent Heavy Veh, %	2	2	2	2	2	2	2	2	2	2	2	2
Cap, veh/h	239	342	100	405	702	40	126	542	98	411	553	83
Arrive On Green	0.03	0.25	0.25	0.19	0.40	0.40	0.04	0.35	0.35	0.03	0.35	0.35
Sat Flow, veh/h	1774	1387	404	1774	1745	100	1774	1537	277	1774	1583	238
Grp Volume(v), veh/h	40	0	421	382	0	554	64	0	236	48	0	644
Grp Sat Flow(s),veh/h/ln	1774	0	1791	1774	0	1845	1774	0	1814	1774	0	1821
Q Serve(g_s), s	2.0	0.0	27.6	20.2	0.0	30.6	2.7	0.0	11.5	2.0	0.0	41.6
Cycle Q Clear(g_c), s	2.0	0.0	27.6	20.2	0.0	30.6	2.7	0.0	11.5	2.0	0.0	41.6
Prop In Lane	1.00		0.23	1.00		0.05	1.00		0.15	1.00		0.13
Lane Grp Cap(c), veh/h	239	0	442	405	0	742	126	0	639	411	0	636
V/C Ratio(X)	0.17	0.00	0.95	0.94	0.00	0.75	0.51	0.00	0.37	0.12	0.00	1.01
Avail Cap(c_a), veh/h	260	0	442	405	0	742	138	0	639	428	0	636
HCM Platoon Ratio	1.00	1.00	1.00	1.00	1.00	1.00	1.00	1.00	1.00	1.00	1.00	1.00
Upstream Filter(I)	1.00	0.00	1.00	1.00	0.00	1.00	1.00	0.00	1.00	1.00	0.00	1.00
Uniform Delay (d), s/veh	32.5	0.0	44.2	32.8	0.0	30.5	30.6	0.0	28.7	23.9	0.0	38.8
Incr Delay (d2), s/veh	0.3	0.0	31.0	30.4	0.0	4.2	3.2	0.0	0.4	0.1	0.0	39.1
Initial Q Delay(d3),s/veh	0.0	0.0	0.0	0.0	0.0	0.0	0.0	0.0	0.0	0.0	0.0	0.0
%ile BackOfQ(50%),veh/ln	1.0	0.0	17.5	15.7	0.0	16.4	1.4	0.0	5.8	1.0	0.0	27.7
LnGrp Delay(d),s/veh	32.8	0.0	75.2	63.2	0.0	34.6	33.7	0.0	29.1	24.0	0.0	77.9
LnGrp LOS	C		E	E		C	C		C	C		F
Approach Vol, veh/h		461			936			300			692	
Approach Delay, s/veh		71.5			46.3			30.1			74.1	
Approach LOS		E			D			C			E	

Timer	1	2	3	4	5	6	7	8
Assigned Phs	1	2	3	4	5	6	7	8
Phs Duration (G+Y+Rc), s	27.6	34.8	9.8	47.0	9.1	53.3	9.4	47.4
Change Period (Y+Rc), s	5.4	5.4	5.4	5.4	5.4	5.4	5.4	5.4
Max Green Setting (Gmax), s	22.2	29.4	5.2	41.6	5.1	46.5	5.1	41.7
Max Q Clear Time (g_c+I1), s	22.2	29.6	4.7	43.6	4.0	32.6	4.0	13.5
Green Ext Time (p_c), s	0.0	0.0	0.0	0.0	0.0	5.3	0.0	6.7

Intersection Summary	
HCM 2010 Ctrl Delay	57.2
HCM 2010 LOS	E

Movement	EBL	EBT	EBR	WBL	WBT	WBR	NBL	NBT	NBR	SBL	SBT	SBR
Lane Configurations												
Traffic Volume (veh/h)	55	76	17	3	322	119	18	20	7	208	144	552
Future Volume (veh/h)	55	76	17	3	322	119	18	20	7	208	144	552
Number	5	2	12	1	6	16	3	8	18	7	4	14
Initial Q (Qb), veh	0	0	0	0	0	0	0	0	0	0	0	0
Ped-Bike Adj(A_pbT)	1.00		1.00	1.00		1.00	1.00		1.00	1.00		1.00
Parking Bus, Adj	1.00	1.00	1.00	1.00	1.00	1.00	1.00	1.00	1.00	1.00	1.00	1.00
Adj Sat Flow, veh/h/ln	1863	1863	1900	1863	1863	1900	1863	1863	1900	1863	1863	1863
Adj Flow Rate, veh/h	77	141	28	4	383	157	24	24	9	229	178	627
Adj No. of Lanes	1	1	0	1	1	0	1	1	0	1	1	1
Peak Hour Factor	0.71	0.54	0.61	0.75	0.84	0.76	0.75	0.83	0.75	0.91	0.81	0.88
Percent Heavy Veh, %	2	2	2	2	2	2	2	2	2	2	2	2
Cap, veh/h	232	627	124	525	522	214	353	571	214	686	823	700
Arrive On Green	0.42	0.42	0.42	0.42	0.42	0.42	0.44	0.44	0.44	0.44	0.44	0.44
Sat Flow, veh/h	862	1510	300	1211	1257	515	674	1293	485	1370	1863	1583
Grp Volume(v), veh/h	77	0	169	4	0	540	24	0	33	229	178	627
Grp Sat Flow(s),veh/h/ln	862	0	1810	1211	0	1772	674	0	1777	1370	1863	1583
Q Serve(g_s), s	6.2	0.0	4.5	0.2	0.0	19.4	1.7	0.0	0.8	8.6	4.5	27.6
Cycle Q Clear(g_c), s	25.6	0.0	4.5	4.7	0.0	19.4	6.2	0.0	0.8	9.4	4.5	27.6
Prop In Lane	1.00		0.17	1.00		0.29	1.00		0.27	1.00		1.00
Lane Grp Cap(c), veh/h	232	0	751	525	0	735	353	0	785	686	823	700
V/C Ratio(X)	0.33	0.00	0.22	0.01	0.00	0.73	0.07	0.00	0.04	0.33	0.22	0.90
Avail Cap(c_a), veh/h	315	0	925	642	0	906	418	0	956	818	1002	851
HCM Platoon Ratio	1.00	1.00	1.00	1.00	1.00	1.00	1.00	1.00	1.00	1.00	1.00	1.00
Upstream Filter(I)	1.00	0.00	1.00	1.00	0.00	1.00	1.00	0.00	1.00	1.00	1.00	1.00
Uniform Delay (d), s/veh	29.3	0.0	14.2	15.8	0.0	18.6	14.9	0.0	12.0	14.7	13.0	19.5
Incr Delay (d2), s/veh	0.8	0.0	0.2	0.0	0.0	2.4	0.1	0.0	0.0	0.3	0.1	10.6
Initial Q Delay(d3),s/veh	0.0	0.0	0.0	0.0	0.0	0.0	0.0	0.0	0.0	0.0	0.0	0.0
%ile BackOfQ(50%),veh/ln	1.5	0.0	2.3	0.1	0.0	9.9	0.3	0.0	0.4	3.3	2.3	14.1
LnGrp Delay(d),s/veh	30.2	0.0	14.4	15.8	0.0	21.0	15.0	0.0	12.0	14.9	13.1	30.1
LnGrp LOS	C		B	B		C	B		B	B	B	C
Approach Vol, veh/h		246			544			57			1034	
Approach Delay, s/veh		19.3			21.0			13.3			23.8	
Approach LOS		B			C			B			C	

Timer	1	2	3	4	5	6	7	8
Assigned Phs		2		4		6		8
Phs Duration (G+Y+Rc), s		36.7		38.8		36.7		38.8
Change Period (Y+Rc), s		5.4		5.4		5.4		5.4
Max Green Setting (Gmax), s		38.6		40.6		38.6		40.6
Max Q Clear Time (g_c+I1), s		27.6		29.6		21.4		8.2
Green Ext Time (p_c), s		3.7		3.7		4.7		5.2

Intersection Summary	
HCM 2010 Ctrl Delay	22.1
HCM 2010 LOS	C

Movement	EBL	EBT	EBR	WBL	WBT	WBR	NBL	NBT	NBR	SBL	SBT	SBR
Lane Configurations												
Traffic Volume (veh/h)	61	52	184	100	130	4	142	437	29	2	501	126
Future Volume (veh/h)	61	52	184	100	130	4	142	437	29	2	501	126
Number	5	2	12	1	6	16	3	8	18	7	4	14
Initial Q (Qb), veh	0	0	0	0	0	0	0	0	0	0	0	0
Ped-Bike Adj(A_pbT)	1.00		1.00	1.00		1.00	1.00		1.00	1.00		1.00
Parking Bus, Adj	1.00	1.00	1.00	1.00	1.00	1.00	1.00	1.00	1.00	1.00	1.00	1.00
Adj Sat Flow, veh/h/ln	1863	1863	1900	1863	1863	1900	1863	1863	1900	1863	1863	1900
Adj Flow Rate, veh/h	90	65	214	120	160	12	197	497	44	4	626	140
Adj No. of Lanes	1	1	0	1	1	0	1	1	0	1	1	0
Peak Hour Factor	0.68	0.80	0.86	0.83	0.81	0.33	0.72	0.88	0.66	0.50	0.80	0.90
Percent Heavy Veh, %	2	2	2	2	2	2	2	2	2	2	2	2
Cap, veh/h	290	65	214	190	298	22	246	872	77	363	653	146
Arrive On Green	0.06	0.17	0.17	0.06	0.17	0.17	0.08	0.52	0.52	0.01	0.44	0.44
Sat Flow, veh/h	1774	382	1258	1774	1712	128	1774	1687	149	1774	1475	330
Grp Volume(v), veh/h	90	0	279	120	0	172	197	0	541	4	0	766
Grp Sat Flow(s),veh/h/ln	1774	0	1641	1774	0	1840	1774	0	1836	1774	0	1805
Q Serve(g_s), s	3.6	0.0	14.9	4.9	0.0	7.5	5.0	0.0	17.7	0.1	0.0	36.0
Cycle Q Clear(g_c), s	3.6	0.0	14.9	4.9	0.0	7.5	5.0	0.0	17.7	0.1	0.0	36.0
Prop In Lane	1.00		0.77	1.00		0.07	1.00		0.08	1.00		0.18
Lane Grp Cap(c), veh/h	290	0	279	190	0	320	246	0	950	363	0	798
V/C Ratio(X)	0.31	0.00	1.00	0.63	0.00	0.54	0.80	0.00	0.57	0.01	0.00	0.96
Avail Cap(c_a), veh/h	293	0	279	190	0	320	278	0	950	455	0	816
HCM Platoon Ratio	1.00	1.00	1.00	1.00	1.00	1.00	1.00	1.00	1.00	1.00	1.00	1.00
Upstream Filter(I)	1.00	0.00	1.00	1.00	0.00	1.00	1.00	0.00	1.00	1.00	0.00	1.00
Uniform Delay (d), s/veh	27.9	0.0	36.3	29.0	0.0	33.0	19.5	0.0	14.5	14.1	0.0	23.6
Incr Delay (d2), s/veh	0.6	0.0	53.6	6.6	0.0	1.8	13.8	0.0	0.8	0.0	0.0	21.9
Initial Q Delay(d3),s/veh	0.0	0.0	0.0	0.0	0.0	0.0	0.0	0.0	0.0	0.0	0.0	0.0
%ile BackOfQ(50%),veh/ln	1.8	0.0	10.8	2.7	0.0	3.9	3.4	0.0	9.1	0.1	0.0	22.7
LnGrp Delay(d),s/veh	28.5	0.0	89.9	35.7	0.0	34.7	33.3	0.0	15.3	14.1	0.0	45.5
LnGrp LOS	C		F	D		C	C		B	B		D
Approach Vol, veh/h		369			292			738			770	
Approach Delay, s/veh		74.9			35.1			20.1			45.4	
Approach LOS		E			D			C			D	

Timer	1	2	3	4	5	6	7	8
Assigned Phs	1	2	3	4	5	6	7	8
Phs Duration (G+Y+Rc), s	10.7	20.3	12.4	44.1	10.4	20.6	5.9	50.7
Change Period (Y+Rc), s	5.4	5.4	5.4	5.4	5.4	5.4	5.4	5.4
Max Green Setting (Gmax), s	5.3	14.9	8.6	39.6	5.1	15.1	5.0	43.2
Max Q Clear Time (g_c+I1), s	6.9	16.9	7.0	38.0	5.6	9.5	2.1	19.7
Green Ext Time (p_c), s	0.0	0.0	0.1	0.7	0.0	1.3	0.0	10.4

Intersection Summary	
HCM 2010 Ctrl Delay	40.4
HCM 2010 LOS	D

Movement	EBL	EBT	EBR	WBL	WBT	WBR	NBL	NBT	NBR	SBL	SBT	SBR
Lane Configurations												
Traffic Volume (veh/h)	20	850	130	80	1850	20	0	0	60	10	10	10
Future Volume (veh/h)	20	850	130	80	1850	20	0	0	60	10	10	10
Number	5	2	12	1	6	16	3	8	18	7	4	14
Initial Q (Qb), veh	0	0	0	0	0	0	0	0	0	0	0	0
Ped-Bike Adj(A_pbT)	1.00		1.00	1.00		1.00	1.00		1.00	1.00		1.00
Parking Bus, Adj	1.00	1.00	1.00	1.00	1.00	1.00	1.00	1.00	1.00	1.00	1.00	1.00
Adj Sat Flow, veh/h/ln	1863	1863	1900	1863	1863	1900	0	1863	1900	1900	1863	1863
Adj Flow Rate, veh/h	22	924	141	87	2011	22	0	0	65	11	11	11
Adj No. of Lanes	1	2	0	1	2	0	0	1	0	0	1	1
Peak Hour Factor	0.92	0.92	0.92	0.92	0.92	0.92	0.92	0.92	0.92	0.92	0.92	0.92
Percent Heavy Veh, %	2	2	2	2	2	2	0	2	2	2	2	2
Cap, veh/h	205	2693	411	480	2936	32	0	0	85	46	33	85
Arrive On Green	0.04	1.00	1.00	0.82	0.82	0.82	0.00	0.00	0.05	0.05	0.05	0.05
Sat Flow, veh/h	1774	3080	470	528	3586	39	0	0	1583	188	624	1583
Grp Volume(v), veh/h	22	531	534	87	990	1043	0	0	65	22	0	11
Grp Sat Flow(s),veh/h/ln	1774	1770	1780	528	1770	1856	0	0	1583	811	0	1583
Q Serve(g_s), s	0.3	0.0	0.0	5.4	34.6	34.9	0.0	0.0	6.1	0.1	0.0	1.0
Cycle Q Clear(g_c), s	0.3	0.0	0.0	5.4	34.6	34.9	0.0	0.0	6.1	6.1	0.0	1.0
Prop In Lane	1.00		0.26	1.00		0.02	0.00		1.00	0.50		1.00
Lane Grp Cap(c), veh/h	205	1548	1557	480	1449	1519	0	0	85	79	0	85
V/C Ratio(X)	0.11	0.34	0.34	0.18	0.68	0.69	0.00	0.00	0.77	0.28	0.00	0.13
Avail Cap(c_a), veh/h	236	1548	1557	480	1449	1519	0	0	91	85	0	91
HCM Platoon Ratio	2.00	2.00	2.00	1.00	1.00	1.00	1.00	1.00	1.00	1.00	1.00	1.00
Upstream Filter(I)	0.91	0.91	0.91	0.27	0.27	0.27	0.00	0.00	1.00	1.00	0.00	1.00
Uniform Delay (d), s/veh	6.6	0.0	0.0	3.0	5.6	5.6	0.0	0.0	70.1	68.1	0.0	67.7
Incr Delay (d2), s/veh	0.2	0.6	0.6	0.2	0.7	0.7	0.0	0.0	30.3	1.9	0.0	0.7
Initial Q Delay(d3),s/veh	0.0	0.0	0.0	0.0	0.0	0.0	0.0	0.0	0.0	0.0	0.0	0.0
%ile BackOfQ(50%),veh/ln	0.3	0.2	0.2	0.8	16.8	18.0	0.0	0.0	3.4	0.9	0.0	0.9
LnGrp Delay(d),s/veh	6.8	0.6	0.6	3.2	6.3	6.3	0.0	0.0	100.4	69.9	0.0	68.4
LnGrp LOS	A	A	A	A	A	A			F	E		E
Approach Vol, veh/h		1087			2120			65			33	
Approach Delay, s/veh		0.7			6.2			100.4			69.4	
Approach LOS		A			A			F			E	

Timer	1	2	3	4	5	6	7	8
Assigned Phs		2		4	5	6		8
Phs Duration (G+Y+Rc), s		136.6		13.4	8.4	128.2		13.4
Change Period (Y+Rc), s		5.4		5.4	5.4	5.4		5.4
Max Green Setting (Gmax), s		130.6		8.6	5.6	119.6		8.6
Max Q Clear Time (g_c+I1), s		2.0		8.1	2.3	36.9		8.1
Green Ext Time (p_c), s		78.5		0.0	0.0	59.3		0.0

Intersection Summary	
HCM 2010 Ctrl Delay	6.9
HCM 2010 LOS	A

Movement	EBL	EBT	EBR	WBL	WBT	WBR	NBL	NBT	NBR	SBL	SBT	SBR
Lane Configurations												
Traffic Volume (veh/h)	70	810	70	130	1640	90	190	130	130	60	10	20
Future Volume (veh/h)	70	810	70	130	1640	90	190	130	130	60	10	20
Number	5	2	12	1	6	16	3	8	18	7	4	14
Initial Q (Qb), veh	0	0	0	0	0	0	0	0	0	0	0	0
Ped-Bike Adj(A_pbT)	1.00		1.00	1.00		1.00	1.00		1.00	1.00		1.00
Parking Bus, Adj	1.00	1.00	1.00	1.00	1.00	1.00	1.00	1.00	1.00	1.00	1.00	1.00
Adj Sat Flow, veh/h/ln	1863	1863	1900	1863	1863	1900	1863	1863	1863	1863	1863	1863
Adj Flow Rate, veh/h	76	880	76	141	1783	98	207	141	141	65	11	22
Adj No. of Lanes	1	2	0	1	2	0	1	1	1	1	1	1
Peak Hour Factor	0.92	0.92	0.92	0.92	0.92	0.92	0.92	0.92	0.92	0.92	0.92	0.92
Percent Heavy Veh, %	2	2	2	2	2	2	2	2	2	2	2	2
Cap, veh/h	176	2172	188	505	2277	124	305	211	243	162	62	103
Arrive On Green	0.06	1.00	1.00	0.04	0.67	0.67	0.12	0.11	0.11	0.04	0.03	0.03
Sat Flow, veh/h	1774	3297	285	1774	3413	186	1774	1863	1583	1774	1863	1583
Grp Volume(v), veh/h	76	472	484	141	917	964	207	141	141	65	11	22
Grp Sat Flow(s),veh/h/ln	1774	1770	1812	1774	1770	1830	1774	1863	1583	1774	1863	1583
Q Serve(g_s), s	2.1	0.0	0.0	3.9	53.8	55.5	16.4	10.9	12.4	5.3	0.9	2.0
Cycle Q Clear(g_c), s	2.1	0.0	0.0	3.9	53.8	55.5	16.4	10.9	12.4	5.3	0.9	2.0
Prop In Lane	1.00		0.16	1.00		0.10	1.00		1.00	1.00		1.00
Lane Grp Cap(c), veh/h	176	1166	1194	505	1180	1221	305	211	243	162	62	103
V/C Ratio(X)	0.43	0.41	0.41	0.28	0.78	0.79	0.68	0.67	0.58	0.40	0.18	0.21
Avail Cap(c_a), veh/h	221	1166	1194	568	1180	1221	329	245	272	162	71	111
HCM Platoon Ratio	2.00	2.00	2.00	1.00	1.00	1.00	1.00	1.00	1.00	1.00	1.00	1.00
Upstream Filter(I)	0.89	0.89	0.89	0.69	0.69	0.69	1.00	1.00	1.00	1.00	1.00	1.00
Uniform Delay (d), s/veh	20.9	0.0	0.0	7.4	17.3	17.6	58.5	63.8	59.0	66.3	70.5	66.5
Incr Delay (d2), s/veh	1.5	0.9	0.9	0.2	3.5	3.7	5.0	5.6	2.5	1.6	1.3	1.0
Initial Q Delay(d3),s/veh	0.0	0.0	0.0	0.0	0.0	0.0	0.0	0.0	0.0	0.0	0.0	0.0
%ile BackOfQ(50%),veh/ln	1.6	0.3	0.3	1.9	27.2	29.1	8.4	5.9	5.6	2.6	0.5	0.9
LnGrp Delay(d),s/veh	22.4	0.9	0.9	7.6	20.8	21.2	63.5	69.4	61.5	67.9	71.8	67.5
LnGrp LOS	C	A	A	A	C	C	E	E	E	E	E	E
Approach Vol, veh/h		1032			2022			489			98	
Approach Delay, s/veh		2.5			20.1			64.6			68.2	
Approach LOS		A			C			E			E	

Timer	1	2	3	4	5	6	7	8
Assigned Phs	1	2	3	4	5	6	7	8
Phs Duration (G+Y+Rc), s	11.4	104.2	24.0	10.4	10.2	105.5	12.0	22.4
Change Period (Y+Rc), s	5.4	5.4	5.4	5.4	5.4	5.4	5.4	5.4
Max Green Setting (Gmax), s	11.4	90.7	20.6	5.7	8.6	93.5	6.6	19.7
Max Q Clear Time (g_c+I1), s	5.9	2.0	18.4	4.0	4.1	57.5	7.3	14.4
Green Ext Time (p_c), s	0.1	49.5	0.1	0.2	0.0	27.5	0.0	0.6

Intersection Summary	
HCM 2010 Ctrl Delay	22.4
HCM 2010 LOS	C

Movement	EBL	EBT	WBT	WBR	SBL	SBR
Lane Configurations						
Traffic Volume (veh/h)	180	1670	2620	460	280	70
Future Volume (veh/h)	180	1670	2620	460	280	70
Number	5	2	6	16	7	14
Initial Q (Qb), veh	0	0	0	0	0	0
Ped-Bike Adj(A_pbT)	1.00			1.00	1.00	1.00
Parking Bus, Adj	1.00	1.00	1.00	1.00	1.00	1.00
Adj Sat Flow, veh/h/ln	1863	1863	1863	1900	1863	1863
Adj Flow Rate, veh/h	196	1815	2848	500	304	76
Adj No. of Lanes	1	3	3	0	2	1
Peak Hour Factor	0.92	0.92	0.92	0.92	0.92	0.92
Percent Heavy Veh, %	2	2	2	2	2	2
Cap, veh/h	215	4205	3068	510	348	160
Arrive On Green	0.19	1.00	0.70	0.70	0.10	0.10
Sat Flow, veh/h	1774	5253	4562	730	3442	1583
Grp Volume(v), veh/h	196	1815	2161	1187	304	76
Grp Sat Flow(s),veh/h/ln	1774	1695	1695	1734	1721	1583
Q Serve(g_s), s	11.9	0.0	79.5	98.3	13.1	6.8
Cycle Q Clear(g_c), s	11.9	0.0	79.5	98.3	13.1	6.8
Prop In Lane	1.00			0.42	1.00	1.00
Lane Grp Cap(c), veh/h	215	4205	2367	1211	348	160
V/C Ratio(X)	0.91	0.43	0.91	0.98	0.87	0.48
Avail Cap(c_a), veh/h	225	4205	2367	1211	358	165
HCM Platoon Ratio	2.00	2.00	1.00	1.00	1.00	1.00
Upstream Filter(I)	0.89	0.89	1.00	1.00	1.00	1.00
Uniform Delay (d), s/veh	51.2	0.0	18.8	21.7	66.5	63.7
Incr Delay (d2), s/veh	33.4	0.3	6.8	21.6	20.3	2.2
Initial Q Delay(d3),s/veh	0.0	0.0	0.0	0.0	0.0	0.0
%ile BackOfQ(50%),veh/ln	9.8	0.1	39.1	53.8	7.2	6.1
LnGrp Delay(d),s/veh	84.6	0.3	25.6	43.3	86.8	65.9
LnGrp LOS	F	A	C	D	F	E
Approach Vol, veh/h		2011	3348		380	
Approach Delay, s/veh		8.5	31.9		82.6	
Approach LOS		A	C		F	

Timer	1	2	3	4	5	6	7	8
Assigned Phs		2		4	5	6		
Phs Duration (G+Y+Rc), s		129.4		20.6	19.3	110.1		
Change Period (Y+Rc), s		5.4		5.4	5.4	5.4		
Max Green Setting (Gmax), s		123.6		15.6	14.8	103.4		
Max Q Clear Time (g_c+I1), s		2.0		15.1	13.9	100.3		
Green Ext Time (p_c), s		118.7		0.1	0.1	3.1		

Intersection Summary	
HCM 2010 Ctrl Delay	27.0
HCM 2010 LOS	C

Movement	EBT	EBR	WBL	WBT	NBL	NBR
Lane Configurations						
Traffic Volume (veh/h)	1650	70	50	2640	10	110
Future Volume (veh/h)	1650	70	50	2640	10	110
Number	2	12	1	6	3	18
Initial Q (Qb), veh	0	0	0	0	0	0
Ped-Bike Adj(A_pbT)		1.00	1.00		1.00	1.00
Parking Bus, Adj	1.00	1.00	1.00	1.00	1.00	1.00
Adj Sat Flow, veh/h/ln	1863	1900	1863	1863	1863	1863
Adj Flow Rate, veh/h	1793	76	54	2870	11	120
Adj No. of Lanes	3	0	1	3	1	2
Peak Hour Factor	0.92	0.92	0.92	0.92	0.92	0.92
Percent Heavy Veh, %	2	2	2	2	2	2
Cap, veh/h	4033	171	297	4434	100	156
Arrive On Green	1.00	1.00	0.03	0.87	0.06	0.06
Sat Flow, veh/h	5171	212	1774	5253	1774	2787
Grp Volume(v), veh/h	1214	655	54	2870	11	120
Grp Sat Flow(s),veh/h/ln	1695	1825	1774	1695	1774	1393
Q Serve(g_s), s	0.0	0.0	0.7	24.9	0.9	6.4
Cycle Q Clear(g_c), s	0.0	0.0	0.7	24.9	0.9	6.4
Prop In Lane		0.12	1.00		1.00	1.00
Lane Grp Cap(c), veh/h	2733	1471	297	4434	100	156
V/C Ratio(X)	0.44	0.45	0.18	0.65	0.11	0.77
Avail Cap(c_a), veh/h	2733	1471	358	4434	125	197
HCM Platoon Ratio	2.00	2.00	1.00	1.00	1.00	1.00
Upstream Filter(I)	0.86	0.86	0.21	0.21	1.00	1.00
Uniform Delay (d), s/veh	0.0	0.0	1.8	2.8	67.2	69.8
Incr Delay (d2), s/veh	0.5	0.8	0.1	0.2	0.5	13.1
Initial Q Delay(d3),s/veh	0.0	0.0	0.0	0.0	0.0	0.0
%ile BackOfQ(50%),veh/ln	0.2	0.3	0.3	11.5	0.4	2.7
LnGrp Delay(d),s/veh	0.5	0.8	1.8	3.0	67.7	82.9
LnGrp LOS	A	A	A	A	E	F
Approach Vol, veh/h	1869			2924	131	
Approach Delay, s/veh	0.6			3.0	81.7	
Approach LOS	A			A	F	

Timer	1	2	3	4	5	6	7	8
Assigned Phs	1	2				6		8
Phs Duration (G+Y+Rc), s	9.9	126.3				136.2		13.8
Change Period (Y+Rc), s	5.4	5.4				5.4		5.4
Max Green Setting (Gmax), s	9.6	113.6				128.6		10.6
Max Q Clear Time (g_c+I1), s	2.7	2.0				26.9		8.4
Green Ext Time (p_c), s	0.0	106.3				97.3		0.1

Intersection Summary	
HCM 2010 Ctrl Delay	4.2
HCM 2010 LOS	A

HCM 2010 analysis supports speed limit in the range of 25 and 55 mph

Movement	EBL	EBT	WBT	WBR	SBL	SBR
Lane Configurations						
Traffic Volume (veh/h)	160	1410	2350	120	70	50
Future Volume (veh/h)	160	1410	2350	120	70	50
Number	5	2	6	16	7	14
Initial Q (Qb), veh	0	0	0	0	0	0
Ped-Bike Adj(A_pbT)	1.00			1.00	1.00	1.00
Parking Bus, Adj	1.00	1.00	1.00	1.00	1.00	1.00
Adj Sat Flow, veh/h/ln	1863	1863	1863	1900	1863	1863
Adj Flow Rate, veh/h	174	1533	2554	130	76	54
Adj No. of Lanes	1	3	3	0	1	1
Peak Hour Factor	0.92	0.92	0.92	0.92	0.92	0.92
Percent Heavy Veh, %	2	2	2	2	2	2
Cap, veh/h	199	4433	3889	196	100	89
Arrive On Green	0.05	0.87	0.78	0.78	0.06	0.06
Sat Flow, veh/h	1774	5253	5127	250	1774	1583
Grp Volume(v), veh/h	174	1533	1737	947	76	54
Grp Sat Flow(s),veh/h/ln	1774	1695	1695	1819	1774	1583
Q Serve(g_s), s	5.4	8.3	34.0	35.2	6.3	5.0
Cycle Q Clear(g_c), s	5.4	8.3	34.0	35.2	6.3	5.0
Prop In Lane	1.00			0.14	1.00	1.00
Lane Grp Cap(c), veh/h	199	4433	2659	1426	100	89
V/C Ratio(X)	0.87	0.35	0.65	0.66	0.76	0.61
Avail Cap(c_a), veh/h	367	4433	2659	1426	163	146
HCM Platoon Ratio	1.00	1.00	1.00	1.00	1.00	1.00
Upstream Filter(I)	1.00	1.00	0.57	0.57	1.00	1.00
Uniform Delay (d), s/veh	40.2	1.8	7.2	7.3	69.8	69.2
Incr Delay (d2), s/veh	11.2	0.2	0.3	0.7	11.3	6.5
Initial Q Delay(d3),s/veh	0.0	0.0	0.0	0.0	0.0	0.0
%ile BackOfQ(50%),veh/ln	7.7	3.9	15.8	17.6	3.4	4.5
LnGrp Delay(d),s/veh	51.4	2.0	7.5	8.0	81.0	75.6
LnGrp LOS	D	A	A	A	F	E
Approach Vol, veh/h		1707	2684		130	
Approach Delay, s/veh		7.0	7.7		78.8	
Approach LOS		A	A		E	

Timer	1	2	3	4	5	6	7	8
Assigned Phs		2		4	5	6		
Phs Duration (G+Y+Rc), s		136.2		13.8	13.1	123.0		
Change Period (Y+Rc), s		5.4		5.4	5.4	5.4		
Max Green Setting (Gmax), s		125.4		13.8	21.9	98.1		
Max Q Clear Time (g_c+I1), s		10.3		8.3	7.4	37.2		
Green Ext Time (p_c), s		102.1		0.1	0.4	57.1		

Intersection Summary	
HCM 2010 Ctrl Delay	9.5
HCM 2010 LOS	A

Movement	EBL	EBT	EBR	WBL	WBT	WBR	NBL	NBT	NBR	SBL	SBT	SBR
Lane Configurations												
Traffic Volume (veh/h)	90	720	90	210	1240	210	100	0	150	170	10	70
Future Volume (veh/h)	90	720	90	210	1240	210	100	0	150	170	10	70
Number	5	2	12	1	6	16	3	8	18	7	4	14
Initial Q (Qb), veh	0	0	0	0	0	0	0	0	0	0	0	0
Ped-Bike Adj(A_pbT)	1.00		1.00	1.00		1.00	1.00		1.00	1.00		1.00
Parking Bus, Adj	1.00	1.00	1.00	1.00	1.00	1.00	1.00	1.00	1.00	1.00	1.00	1.00
Adj Sat Flow, veh/h/ln	1863	1863	1900	1863	1863	1900	1900	1863	1900	1900	1863	1863
Adj Flow Rate, veh/h	98	783	98	228	1348	228	109	0	163	185	11	76
Adj No. of Lanes	1	2	0	1	2	0	0	2	0	0	1	1
Peak Hour Factor	0.92	0.92	0.92	0.92	0.92	0.92	0.92	0.92	0.92	0.92	0.92	0.92
Percent Heavy Veh, %	2	2	2	2	2	2	2	2	2	2	2	2
Cap, veh/h	183	1672	209	412	1708	286	114	0	419	281	14	460
Arrive On Green	0.04	0.53	0.53	0.07	0.56	0.56	0.29	0.00	0.29	0.29	0.29	0.29
Sat Flow, veh/h	1774	3166	396	1774	3035	508	226	0	1441	807	48	1583
Grp Volume(v), veh/h	98	438	443	228	780	796	109	0	163	196	0	76
Grp Sat Flow(s),veh/h/ln	1774	1770	1793	1774	1770	1773	226	0	1441	855	0	1583
Q Serve(g_s), s	3.8	23.3	23.3	8.6	51.7	53.4	7.5	0.0	13.6	22.5	0.0	5.4
Cycle Q Clear(g_c), s	3.8	23.3	23.3	8.6	51.7	53.4	43.6	0.0	13.6	36.1	0.0	5.4
Prop In Lane	1.00		0.22	1.00		0.29	1.00		1.00	0.94		1.00
Lane Grp Cap(c), veh/h	183	934	947	412	996	998	114	0	419	295	0	460
V/C Ratio(X)	0.53	0.47	0.47	0.55	0.78	0.80	0.96	0.00	0.39	0.66	0.00	0.17
Avail Cap(c_a), veh/h	240	934	947	534	996	998	114	0	419	295	0	460
HCM Platoon Ratio	1.00	1.00	1.00	1.00	1.00	1.00	1.00	1.00	1.00	1.00	1.00	1.00
Upstream Filter(I)	0.90	0.90	0.90	0.09	0.09	0.09	1.00	0.00	1.00	1.00	0.00	1.00
Uniform Delay (d), s/veh	26.0	22.2	22.2	16.2	25.6	26.0	72.7	0.0	42.6	57.0	0.0	39.6
Incr Delay (d2), s/veh	2.2	1.5	1.5	0.1	0.6	0.6	71.3	0.0	0.6	5.5	0.0	0.2
Initial Q Delay(d3),s/veh	0.0	0.0	0.0	0.0	0.0	0.0	0.0	0.0	0.0	0.0	0.0	0.0
%ile BackOfQ(50%),veh/ln	2.0	11.7	11.8	4.1	25.3	26.3	6.8	0.0	5.5	8.2	0.0	2.4
LnGrp Delay(d),s/veh	28.2	23.7	23.7	16.3	26.2	26.7	144.0	0.0	43.1	62.5	0.0	39.8
LnGrp LOS	C	C	C	B	C	C	F		D	E		D
Approach Vol, veh/h		979			1804			272			272	
Approach Delay, s/veh		24.2			25.1			83.5			56.1	
Approach LOS		C			C			F			E	

Timer	1	2	3	4	5	6	7	8
Assigned Phs	1	2		4	5	6		8
Phs Duration (G+Y+Rc), s	16.4	84.6		49.0	11.2	89.8		49.0
Change Period (Y+Rc), s	5.4	5.4		5.4	5.4	5.4		5.4
Max Green Setting (Gmax), s	21.3	68.9		43.6	10.6	79.6		43.6
Max Q Clear Time (g_c+I1), s	10.6	25.3		38.1	5.8	55.4		45.6
Green Ext Time (p_c), s	0.5	26.9		1.6	0.1	17.9		0.0

Intersection Summary	
HCM 2010 Ctrl Delay	32.2
HCM 2010 LOS	C

Movement	EBL	EBT	EBR	WBL	WBT	WBR	NBL	NBT	NBR	SBL	SBT	SBR
Lane Configurations												
Traffic Volume (veh/h)	80	600	80	200	940	200	20	100	130	130	100	20
Future Volume (veh/h)	80	600	80	200	940	200	20	100	130	130	100	20
Number	5	2	12	1	6	16	3	8	18	7	4	14
Initial Q (Qb), veh	0	0	0	0	0	0	0	0	0	0	0	0
Ped-Bike Adj(A_pbT)	1.00		1.00	1.00		1.00	1.00		1.00	1.00		1.00
Parking Bus, Adj	1.00	1.00	1.00	1.00	1.00	1.00	1.00	1.00	1.00	1.00	1.00	1.00
Adj Sat Flow, veh/h/ln	1863	1863	1900	1863	1863	1900	1863	1863	1900	1863	1863	1900
Adj Flow Rate, veh/h	87	652	87	217	1022	217	22	109	141	141	109	22
Adj No. of Lanes	1	2	0	1	2	0	1	1	0	1	1	0
Peak Hour Factor	0.92	0.92	0.92	0.92	0.92	0.92	0.92	0.92	0.92	0.92	0.92	0.92
Percent Heavy Veh, %	2	2	2	2	2	2	2	2	2	2	2	2
Cap, veh/h	264	1702	227	427	1676	355	290	124	160	212	339	68
Arrive On Green	0.01	0.18	0.18	0.07	0.58	0.58	0.02	0.17	0.17	0.08	0.23	0.23
Sat Flow, veh/h	1774	3140	418	1774	2908	616	1774	739	955	1774	1505	304
Grp Volume(v), veh/h	87	367	372	217	621	618	22	0	250	141	0	131
Grp Sat Flow(s),veh/h/ln	1774	1770	1789	1774	1770	1754	1774	0	1694	1774	0	1809
Q Serve(g_s), s	3.2	27.4	27.5	7.9	34.4	34.6	1.5	0.0	21.6	9.6	0.0	9.1
Cycle Q Clear(g_c), s	3.2	27.4	27.5	7.9	34.4	34.6	1.5	0.0	21.6	9.6	0.0	9.1
Prop In Lane	1.00		0.23	1.00		0.35	1.00		0.56	1.00		0.17
Lane Grp Cap(c), veh/h	264	959	970	427	1020	1011	290	0	284	212	0	407
V/C Ratio(X)	0.33	0.38	0.38	0.51	0.61	0.61	0.08	0.00	0.88	0.66	0.00	0.32
Avail Cap(c_a), veh/h	340	959	970	549	1020	1011	316	0	368	240	0	499
HCM Platoon Ratio	0.33	0.33	0.33	1.00	1.00	1.00	1.00	1.00	1.00	1.00	1.00	1.00
Upstream Filter(I)	0.96	0.96	0.96	0.61	0.61	0.61	1.00	0.00	1.00	1.00	0.00	1.00
Uniform Delay (d), s/veh	18.2	39.5	39.5	16.3	20.7	20.8	50.1	0.0	61.0	46.9	0.0	48.5
Incr Delay (d2), s/veh	0.7	1.1	1.1	0.6	1.6	1.7	0.1	0.0	17.5	5.7	0.0	0.5
Initial Q Delay(d3),s/veh	0.0	0.0	0.0	0.0	0.0	0.0	0.0	0.0	0.0	0.0	0.0	0.0
%ile BackOfQ(50%),veh/ln	1.6	13.8	14.0	3.9	17.2	17.1	0.8	0.0	11.5	5.0	0.0	4.6
LnGrp Delay(d),s/veh	18.9	40.6	40.6	16.8	22.4	22.5	50.2	0.0	78.5	52.6	0.0	49.0
LnGrp LOS	B	D	D	B	C	C	D		E	D		D
Approach Vol, veh/h		826			1456			272			272	
Approach Delay, s/veh		38.3			21.6			76.2			50.9	
Approach LOS		D			C			E			D	

Timer	1	2	3	4	5	6	7	8
Assigned Phs	1	2	3	4	5	6	7	8
Phs Duration (G+Y+Rc), s	15.7	86.7	8.4	39.2	10.6	91.8	17.0	30.5
Change Period (Y+Rc), s	5.4	5.4	5.4	5.4	5.4	5.4	5.4	5.4
Max Green Setting (Gmax), s	20.6	61.2	5.2	41.4	11.6	70.2	14.0	32.6
Max Q Clear Time (g_c+I1), s	9.9	29.5	3.5	11.1	5.2	36.6	11.6	23.6
Green Ext Time (p_c), s	0.4	16.5	0.0	2.5	0.1	17.0	0.1	1.5

Intersection Summary	
HCM 2010 Ctrl Delay	34.6
HCM 2010 LOS	C

Movement	EBT	EBR	WBL	WBT	NBL	NBR
Lane Configurations						
Traffic Volume (veh/h)	620	160	230	700	60	100
Future Volume (veh/h)	620	160	230	700	60	100
Number	2	12	1	6	3	18
Initial Q (Qb), veh	0	0	0	0	0	0
Ped-Bike Adj(A_pbT)		1.00	1.00		1.00	1.00
Parking Bus, Adj	1.00	1.00	1.00	1.00	1.00	1.00
Adj Sat Flow, veh/h/ln	1863	1900	1863	1863	1863	1863
Adj Flow Rate, veh/h	674	174	250	761	65	109
Adj No. of Lanes	2	0	1	2	1	1
Peak Hour Factor	0.92	0.92	0.92	0.92	0.92	0.92
Percent Heavy Veh, %	2	2	2	2	2	2
Cap, veh/h	2133	550	578	3002	142	200
Arrive On Green	0.77	0.77	0.05	0.85	0.08	0.08
Sat Flow, veh/h	2880	719	1774	3632	1774	1583
Grp Volume(v), veh/h	428	420	250	761	65	109
Grp Sat Flow(s),veh/h/ln	1770	1736	1774	1770	1774	1583
Q Serve(g_s), s	11.2	11.2	4.3	6.2	5.2	9.7
Cycle Q Clear(g_c), s	11.2	11.2	4.3	6.2	5.2	9.7
Prop In Lane		0.41	1.00		1.00	1.00
Lane Grp Cap(c), veh/h	1354	1329	578	3002	142	200
V/C Ratio(X)	0.32	0.32	0.43	0.25	0.46	0.54
Avail Cap(c_a), veh/h	1354	1329	951	3002	244	291
HCM Platoon Ratio	1.00	1.00	1.00	1.00	1.00	1.00
Upstream Filter(I)	1.00	1.00	0.72	0.72	1.00	1.00
Uniform Delay (d), s/veh	5.4	5.4	3.6	2.2	65.9	61.4
Incr Delay (d2), s/veh	0.6	0.6	0.4	0.0	2.3	2.3
Initial Q Delay(d3),s/veh	0.0	0.0	0.0	0.0	0.0	0.0
%ile BackOfQ(50%),veh/ln	5.7	5.6	2.1	3.0	2.7	4.4
LnGrp Delay(d),s/veh	6.1	6.1	4.0	2.2	68.2	63.7
LnGrp LOS	A	A	A	A	E	E
Approach Vol, veh/h	848			1011	174	
Approach Delay, s/veh	6.1			2.7	65.4	
Approach LOS	A			A	E	

Timer	1	2	3	4	5	6	7	8
Assigned Phs	1	2				6		8
Phs Duration (G+Y+Rc), s	12.4	120.2				132.6		17.4
Change Period (Y+Rc), s	5.4	5.4				5.4		5.4
Max Green Setting (Gmax), s	38.6	74.6				118.6		20.6
Max Q Clear Time (g_c+I1), s	6.3	13.2				8.2		11.7
Green Ext Time (p_c), s	0.7	15.2				15.8		0.3

Intersection Summary	
HCM 2010 Ctrl Delay	9.5
HCM 2010 LOS	A

Movement	EBL	EBT	EBR	WBL	WBT	WBR	NBL	NBT	NBR	SBL	SBT	SBR
Lane Configurations												
Traffic Volume (veh/h)	70	590	70	90	540	90	130	100	20	130	100	20
Future Volume (veh/h)	70	590	70	90	540	90	130	100	20	130	100	20
Number	5	2	12	1	6	16	3	8	18	7	4	14
Initial Q (Qb), veh	0	0	0	0	0	0	0	0	0	0	0	0
Ped-Bike Adj(A_pbT)	1.00		1.00	1.00		1.00	1.00		1.00	1.00		1.00
Parking Bus, Adj	1.00	1.00	1.00	1.00	1.00	1.00	1.00	1.00	1.00	1.00	1.00	1.00
Adj Sat Flow, veh/h/ln	1863	1863	1900	1863	1863	1900	1863	1863	1900	1863	1863	1900
Adj Flow Rate, veh/h	76	641	76	98	587	98	141	109	22	141	109	22
Adj No. of Lanes	1	1	0	1	1	0	1	1	0	1	1	0
Peak Hour Factor	0.92	0.92	0.92	0.92	0.92	0.92	0.92	0.92	0.92	0.92	0.92	0.92
Percent Heavy Veh, %	2	2	2	2	2	2	2	2	2	2	2	2
Cap, veh/h	387	987	117	368	940	157	322	341	69	322	341	69
Arrive On Green	0.60	0.60	0.60	0.60	0.60	0.60	0.23	0.23	0.23	0.23	0.23	0.23
Sat Flow, veh/h	754	1635	194	731	1557	260	1254	1505	304	1254	1505	304
Grp Volume(v), veh/h	76	0	717	98	0	685	141	0	131	141	0	131
Grp Sat Flow(s),veh/h/ln	754	0	1829	731	0	1817	1254	0	1809	1254	0	1809
Q Serve(g_s), s	4.5	0.0	16.3	6.4	0.0	15.2	6.7	0.0	3.8	6.7	0.0	3.8
Cycle Q Clear(g_c), s	19.8	0.0	16.3	22.7	0.0	15.2	10.6	0.0	3.8	10.6	0.0	3.8
Prop In Lane	1.00		0.11	1.00		0.14	1.00		0.17	1.00		0.17
Lane Grp Cap(c), veh/h	387	0	1104	368	0	1097	322	0	410	322	0	410
V/C Ratio(X)	0.20	0.00	0.65	0.27	0.00	0.62	0.44	0.00	0.32	0.44	0.00	0.32
Avail Cap(c_a), veh/h	603	0	1628	577	0	1618	483	0	643	483	0	643
HCM Platoon Ratio	1.00	1.00	1.00	1.00	1.00	1.00	1.00	1.00	1.00	1.00	1.00	1.00
Upstream Filter(I)	1.00	0.00	1.00	1.00	0.00	1.00	1.00	0.00	1.00	1.00	0.00	1.00
Uniform Delay (d), s/veh	14.3	0.0	8.2	15.6	0.0	8.0	24.9	0.0	20.5	24.9	0.0	20.5
Incr Delay (d2), s/veh	0.2	0.0	0.7	0.4	0.0	0.6	0.9	0.0	0.4	0.9	0.0	0.4
Initial Q Delay(d3),s/veh	0.0	0.0	0.0	0.0	0.0	0.0	0.0	0.0	0.0	0.0	0.0	0.0
%ile BackOfQ(50%),veh/ln	1.0	0.0	8.2	1.3	0.0	7.6	2.4	0.0	1.9	2.4	0.0	1.9
LnGrp Delay(d),s/veh	14.6	0.0	8.9	16.0	0.0	8.6	25.8	0.0	20.9	25.8	0.0	20.9
LnGrp LOS	B		A	B		A	C		C	C		C
Approach Vol, veh/h		793			783			272			272	
Approach Delay, s/veh		9.4			9.5			23.5			23.5	
Approach LOS		A			A			C			C	

Timer	1	2	3	4	5	6	7	8
Assigned Phs		2		4		6		8
Phs Duration (G+Y+Rc), s		43.8		19.8		43.8		19.8
Change Period (Y+Rc), s		5.4		5.4		5.4		5.4
Max Green Setting (Gmax), s		56.6		22.6		56.6		22.6
Max Q Clear Time (g_c+I1), s		21.8		12.6		24.7		12.6
Green Ext Time (p_c), s		14.2		1.8		13.7		1.8

Intersection Summary	
HCM 2010 Ctrl Delay	13.1
HCM 2010 LOS	B

Appendix G: Transit Oriented Development Analysis

TOD Readiness Tool

Assessment Form

This worksheet contains a series of questions that evaluate the 20 measures of TOD readiness. Fill in the information requested in each orange or yellow box, and the tool will automatically calculate the readiness score based on the criteria and thresholds outlined in the User Guide. The results will display in the **Summary Sheet** tab. Use these results to identify strategies for increasing readiness and complete the 2-page summary template.

Please select a value for EACH orange box, and enter a value into EACH yellow box. Leave no orange or yellow boxes blank.

Example Orange Input Box

Example Yellow Input Box

To enter information into the orange boxes, click on the orange box. A grey down arrow will appear in a white box to the right of the orange box. Click on the grey down arrow to view the options for answering the question, and click on the answer you would like to select.

Yellow boxes also require inputs. Enter the appropriate number into each yellow box. The grey down arrow will not appear when you click on a yellow box. Please type the answer directly into the yellow box.

Background Information

1. Select the county in which the station area is located: Miami-Dade

2. Envisioned/Desired Transit Type Light Rail

Please refer to the Framework for TOD in Florida for the definitions of each Transit Type. This information is also provided in the "Definitions" tab of this tool.
Framework for TOD in Florida

3. Envisioned/Desired Place Type Neighborhood Center

Please refer to the Framework for TOD in Florida for the definitions of each Transit Type. This information is also provided in the "Definitions" tab of this tool.
Framework for TOD in Florida

Policy Measures

Compelling Vision (Readiness Measure 1 of 20)

Use critical thinking to evaluate the relative strength of your community's vision and supportive policies. This measure is named Compelling Vision, because its merit lies in the degree to which the vision *compels* decision makers to follow through.

When answering the questions below, please avoid simply 'checking the box' to indicate whether your community meets each criterion in name only. Rather, think critically about the strength of each criterion, ask yourself the questions below, and develop your own questions to assess the viability of each criterion:

Many of the questions reference the Framework for TOD in Florida. This document is available online and can be found here: Framework for TOD in Florida

		Miami-Dade County
1a. Does the area have a vision for the future in an adopted plan?	Yes	Yes answer is based on MPO developing plans for the smart plan corrior now. MPO funding $7 million dollars to study the corridors.
1b. Does the vision include illustrative representations (e.g. pictures and/or renderings)?	Yes	County and MPO will likely have renderings incorporated into the Smart Plan documents.
Please refer to the User Guide for a description of a compelling vision		
2. Does the vision include language that is supportive of TOD?	Yes	It is anticipated that the SMART Plan will include vision language supportive of TOD for this area.
3. Does the vision include a map that orients development around a future transit station?	No	It is recommended that the SMART Plan include a map with development oriented around the transit station.

4. Does the area have a station area plan that shows the desired layout of streets and buildings?	No	There is currently no station area plan. It is recommended that the SMART Plan studies include a station area plan for this station.
5. Was the adopted vision and/or station area plan developed through a charrette process or other intensive public outreach effort?	Yes	County has undertaken many charettes for various corridors. The SMART Plan corridor study is anticipated to include public outreach.
6. Does the Comprehensive Plan include (for the area under assessment):		
Transit-supportive densities (as specified in the Framework for TOD in Florida)?	No	9 - 12 du per acre 1.5-2.0 FAR (community center served by light rail). Most of the residential surrounding the station in the county is low density or estate.
A mix of uses (as specified in the Framework for TOD in Florida)?	Yes	Broad mix of uses within the station area.
Designations that exempt or modify concurrency requirements (e.g. MMTDs, Planned Mobility Districts, TCEAs, or TOCAs)?	No	Just west of MD TCEA; http://www.dot.state.fl.us/rail/PlanDevel/RSAC/Mtg4files/alltceas.pdf
7. Has the community adopted a Complete Streets policy and/or bicycle and pedestrian plan(s)?	Yes	MD County has not developed a complete streets policy. 4 policies in the TE require the development of a CS program by 2015, although it appears they do not currently have one. The MPO does havea Bike/Ped Plan http://miamidadempo.org/library/plans/miami-dade-2040-bicycle-pedestrian-plan.pdf MDC could further refine Bike/Ped plans for the specific area

Supportive Regulations (Readiness Measure 2 of 20)

The following questions can provide some guidance on evaluating the degree to which land use and development regulations are supportive of TOD. Many of these questions are not specific to the area under assessment. They instead assess the regulatory context of the local government as a whole. Where appropriate, the user should ask these questions specifically for the area under assessment.

Many of the questions reference the Framework for TOD in Florida or the Florida TOD Guidebook. These documents are available online and can be found here:

Framework for TOD in Florida
Florida TOD Guidebook

		Miami-Dade County
1. Does the zoning code require the appropriate mix of uses for the TOD place type, as specified in the Framework for TOD in Florida?	Yes	FLUM Uses: Institutional Office/Residential Transportation Parks and Recreation (the golf course parcel) Environmentally Protected Parks Residential Low Density (LDR) 2.5 - 6 du/ac Medium Density Residential (MDR) 13 - 25 du/ac [in palmetto bay and just west or on the western edge of the study area north of 152nd] Residential Estate (EDR) 1 - 2.5 [most of the land]
2. Does the zoning code require the transit supportive densities for the TOD place type, specified in the Framework for TOD in Florida?	No	Neighborhood Center Place Type with Light Rail requires 9-12 du per acre
3. Are the zoning regulations based on a form-based code (including but not	No	No.
4. Are the development regulations consistent with the model land development		
Building Height	2	33-52: Max height 35 feet, execpt where specified elsewhere. Office Park District allows 8 stories (existing hospital). Other districts in the station area must maintain 35 foot height requriement.
Building Placement	1	Large Setbacks required. Example: 30 ft from front property line and 15 feet from the side in OPD, Front setback in BU-1 is 20 feet
Building Frontage: Building frontage is the percentage of the total width of a lot which is required to be occupied by the primary façade of a building.	1	No building frontage requirements. Only set backs
Density	2	Residential uses in the area are primarily Single Family Residential and estate. Density bonuses for affordable housing in Office Residential
Frontage Standards: define architectural and design components for the entrance(s)	1	OPD requires minimum frontage of 100 feet
Civic Open Space	2	A preservation area exists in the station area.
Building Façade Standards	1	Few, if any façade standards for this area. MD County does have façade standards for some subdistricts (example: downtown Kendall)

Parking Standards	1	Retail - parking space for each and every two hundred fifty (250) square feet of the gross floor area. Parking reductions for low/moderate income. (Guidebook has 0-1 space per du and 1 space per 1000sft of most non-residential). No other incentives for parking reductions.
Street and Block Standards:	3	County property has relatively well connected grid on north side of station. South side has a golf course, which is a good redevelopment opportunity and could require new streets and blocks.TOD guidebook suggests that maximum block length shall not exceed 660 feet County Subdivision Standards: Block length shall not exceed one thousand five hundred (1,500) feet, or be less than four hundred (400) feet, unless a lesser or greater length is requested by the subdivider and is deemed advisable because of unusual conditions by the plat division of the appropriate authority. In blocks nine hundred (900) feet in length or over, pedestrian crosswalks not less than ten (10) feet wide may be required to provide circulation or access to school, playground, shopping center, transportation, and other community facilities
5. Has the local government developed pedestrian-oriented, transit supportive, or other urban design guidelines that apply to this area? (See the City of Fort Lauderdale's TOD Guidelines for its Downtown Master Plan as an example.) City of Fort Lauderdale - TOD Guidelines	No	MPO has developed Complete Streets design guidelines
6. Are there parking reductions, maximums, shared parking, or other policies and initiatives lowering or removing parking requirements? For example, does the community have a parking management plan or other initiatives that are alternatives to parking minimums?	Yes	Yes, in the parking section of the Code. Parking reductions for low and moderate income projects. This policy could be improved to allow greater reductions in the station area.
7. Is there a Transportation Demand Management (TDM) Ordinance that applies to the area under assessment?	No	Per Staff - County implements the Comprehensive Development Master Plan (CDMP). Unclear if this is a yes or no. No returns when doing a word search for "Transportation Demand".

Predictable & Consistent Political & Development Context (Readiness Measure 3 of 20)

The following questions provide guidance on how to think about the predictability and consistency of the political and development context. This measure is evaluated through the following criteria, represented as a series of questions. Each question has a range of point values associated with it, and several questions beneath to help users think critically about each criterion. Many of these questions require a subjective assessment. One may argue about whether to give a score of 2 or 3, or 4 or 5. Please note that the score itself is secondary to critically thinking about the political environment, and assessing where one's weaknesses and strengths lie, and to develop strategies that build upon the strengths and address weaknesses.

Rate the criteria on a scale of 1 to 5 for each element, with 5 being the highest and 1 the lowest. Below each question are some additional questions in italic font to help you rate the criteria.

		Miami-Dade County
1. Is there a predictable permitting process?	3	
Do you have a general sense of how long it takes to get a permit approved? *Do you have a stated goal of timely permitting approvals?*		Mayor is concerned with length of permitting. Has been shortened from 1 year 9 months. Contact Nathan Kogon about processing zoning amendments
2. Is there consistency in the approval process?	5	
Is there general agreement between elected officials (and within the general community) on the vision?		Yes, Everyone is on board
Do developments that meet the requirements in the regulations and codes generally get approved, or do elected officials generally oppose developments due to fears of traffic, crime, etc., even if they meet the requirements?		Yes.
3. Is there a general willingness to work with developers?	5	Yes

Do developers perceive that staff and elected officials are willing to frequently communicate and find solutions in instances where codes are difficult to meet?		Yes
Do elected officials demonstrate a willingness to generally work with developers to balance their needs with the city's vision, needs, and goals?		Yes
4. Do the City Commission and Community Redevelopment Agency (CRA) share a common vision? *If there is a CRA, do the projects that are approved by the CRA also get approved by City Commission?*		
5. Is there a local champion (either elected official or community leader with general business or resident support) actively advocating for TOD? *A local champion for TOD could be a City Commissioner or a leader of a community organization who shows support for TOD (for example by consistently voicing the importance of TOD at meetings and other events, and through other community discussions).*	5	Mr. Monestine mayor are champions. He is part of MPO board too

Affordable Housing Policies (Readiness Measure 4 of 20)

The following criteria (shown as a list of questions) assess a local government's or housing authority's level of effort in planning for affordable housing within the station area. Users should review the housing element of the local government's comprehensive plan for affordable housing policies and programs. Users should also review the land development regulations and zoning ordinance. Additional information from the local housing authority should also be considered.

		Miami-Dade County
1a. Does the zoning ordinance require inclusionary housing? **1b. If yes, is inclusionary housing voluntary or mandatory?**	No	Does not appear to be an Inclusionary Zoning ordinance. There is an AH advisiory board and certain impact fee credit for deveoping AH.
2. Are there additional incentives for providing more than the minimum required affordable units (e.g. density bonuses, parking reductions, expedited permits, reduced fees, or cash subsidies)?	Yes	33E-14: Exempts development with affordable housing from road impact fee requirements
3. Has the local government undertaken efforts to leverage private investment in mixed income housing (e.g. through acquiring and assembling land, rezoning, funding environmental remediation through EPA grants, or by providing in-kind matches, in-lieu fees, or other government funding)?	Yes	Yes. MDT is developing some of the area and looking for developers to development mixed uses. Have programs for affordable housing through housing agencies. (Not clear this applies specifically to this station area)
4. Is there a policy to direct affordable housing into the station area?	Yes	Yes. Send density into urban infill areas. Particularly around stations.
5a. Has the local government or other entity conducted an assessment of affordable housing need? **5b. If Yes, has the local government or other entity implemented the recommendations?**	Yes	County has different programs and agencies. Working on development around the station areas.

Public Investment (Readiness Measure 5 of 20)

The measure for public investment is evaluated through the following series of questions.

1. Has the community invested in bicycle facilities within the station area, or committed funds to the installation of bicycle facilities in the Capital Improvement Program (CIP) or MPO Transportation Improvement Program (TIP)?	Yes	Any funding committed in CIP or TIP? No bike ped specific project identified on MPO map tool, but they are likely part of planned roadway improvements. 2 major programs, 1. Loveland Trail ? 2. Underline (Not clear if they are in the station area)
2. Has the community invested in pedestrian facilities within the station area, or committed funds to the construction of pedestrian facilities in the CIP or MPO TIP?	Yes	No bike ped specific project identified on MPO map tool, but they are likely part of planned roadway improvements.
3. Has the community invested in streetscaping enhancements and landscaping, or committed funds to streetscaping projects in the CIP or MPO TIP?	No	No. County has a landscaping ordinance that requires transportation projects to have a minimum standard of landscaping. Call Javier in public works re: TIP / CIP projects.

4. Has the community made an investment in utility infrastructure and maintenance to support desired densities and intensities, or committed funds to doing so in the CIP or MPO TIP?	No	The BOCC requested that department look at infrastructure needed to stimulate dev or redevelopment.
5. Has the community made an investment via grants or other incentives to encourage private sector development of new buildings, or committed funds to doing so in the CIP or MPO TIP?	No	Unknown. There is a land use change for development in the area for offices and housing. The current FLUM is not up-to-date.
6. Does the local government offer incentives to renovate existing buildings, build façade improvements, or support local businesses within the area (e.g. through Florida's Main Street program)?	No	Contact historic preservation office and Department of Community Development (administers CDBG grant program)

Market Measures

Recent Development Activity (Readiness Measure 6 of 20)

Recent development activity may include development projects that are proposed, approved, under construction, or recently completed. For the purpose of balancing accurate results, easily accessible data, and simple computations, this measure is based on the number of proposed, approved, and under construction multifamily, commercial, and mixed-use projects within the station area. The number of projects can be determined through a review of the Community Development or Zoning Department records on proposed developments and permits issued for construction and conversations with department staff.

Enter the number of proposed, approved, and under construction multifamily, commercial, and mixed-use projects (as described above) for the last 3 years. *0* **Need to contact Nathan K.**

Data Requirements: Local government records on development, including building permits. These records may be available from the local government's building department or planning department.

Redevelopment Potential (Readiness Measure 7 of 20)

The measure for redevelopment potential is a composite of three different scores. GIS analysis of readily available data is required. The data requirements and analysis methods are described for each question below.

1. Vacant and underutilized properties

Acres of land where the improvement-to-land value ratio is less than 1.0 *471.04* acres

Data Requirements: County tax assessor parcel data

Method: Compile the necessary data for the station area (1/2 mile radius surrounding the transit station). Compute the ratio of "improvement" to "land value" for each parcel. Add the acreage of all parcels where the ratio is < 1.0

2. Parcel size and ownership

2a. Number of unique property owners per acre: the number of unique owners divided by the sum of parcel acreage, excluding public right-of-way *1.126*

Data Requirements: County or city tax assessor parcel data

Method: Sum of unique owners within the station area divided by the sum of the parcel acreage excluding public ROW

2b. Average parcel size: the number of parcels per block *11.2* parcels

Data Requirements: County or city tax assessor parcel data

Method: Calculate the number of parcels within each block in the station area. Then take the average across all blocks in the station area.

3. Land Use

The percentage of parcels that are non-vacant single-family residential *33.8* percent

Data Requirements: County or city tax assessor parcel data

Method: Select all parcels within the station area that have an existing use of single-family residential. Remove from this selection any parcels that are currently vacant. Compute the sum of the acreage of the remaining selected parcels and divide by 502.65.

$$\frac{\text{Total acres of non-vacant single family residential parcels}}{\text{502.65 acres within the half-mile radius station area}} \text{ x } 100$$

Real Estate Values (Readiness Measure 8 of 20)

The American Community Survey 3-year estimates provide data on median home value and median gross rent by census block group. Using GIS, compute the weighted average of the median home value and median gross rent for a station area. The Real Estate Values score takes the average of the median home value score and the median gross rent score.

1. Median home value — *$ 352,711.36*

Data Requirements: U.S. Census Bureau, 2011-2013 3-Year American Community Survey
US Census - American Fact Finder

Method: Compile the necessary shapefiles and tables to display median home value by census block group for the entire station area (half-mile radius surrounding the transit station). Compute the weighted average of the Median Home Value for each block group within the station area, based on the percentage of area of each census block group within the station area.

2. Median gross rent — *$ 695.78*

Data Requirements: U.S. Census Bureau, 2011-2013 3-Year American Community Survey
US Census - American Fact Finder

Method: Compile the necessary shapefiles and tables to display median gross rent by census block group for the entire station area (half-mile radius surrounding the transit station). Compute the weighted average of the Median Home Value for each block group within the station area, based on the percentage of area of each census block group within the station area.

Financial Incentives for Development (Readiness Measure 9 of 20)

The measure for financial incentives for development evaluates the number of available financial incentive programs for development and whether these incentives have been used to build a project within the station area.

		Miami-Dade County
1a. Has a market assessment been conducted to determine if there are financial	No	Contact Manny Hermada (?).
1b. If a market assessment has been conducted, are financial incentives required for the type of development envisioned?	No	No. Contact economic development office to verify.
Please proceed to the next measure: Transit Travel Shed		
2. Are local or regional financial incentive programs available for projects within the station area to encourage the desired development? Please select the number of such programs from the dropdown menu to the right.		This could be a yes, although without a market assessment, the tool makes this a moot point. Yes could result from the County (brownsville TOD and others) but we need to verify and determine number of programs and their names
Please list the name(s) of the program(s) in the spaces provided:		

Examples of financial incentives for development include: Land banks, density easements, Florida Housing Finance Corporation programs , tax credit financing (especially for affordable housing), and impact and/or development fee credits for locating within a station area.

3. Have any of the financial incentives for development been applied towards the completion of a project meeting the vision of the station area?

Trends in Income & Educational Attainment Data (Readiness Measure 10 of 20)

The U.S. Decennial Census and American Community Survey's 3-year estimates provide data on income and educational attainment at the block group level. This measure is an average of two percentages, each of which are computed using a combination of the Decennial Census and ACS data:
1. Percentage change of per capita income over 10 years (e.g. a 20% increase from $48,000 in 2000 to $57,600 in 2010)
2. Percentage change of the percent of the population age 25+ that has a bachelor's degree or higher (e.g. a 40% increase from 15% in 2000 to 21% in 2010)

This measure reflects the desirability of the area from the market perspective. It is important to note that from a social equity perspective, increasing trends in income levels indicate that medium- and low-income households may not be able to afford to live in the station area in the future. It is important to maintain a diverse housing stock for a mix of incomes. It is also important to note that trends in income levels and educational attainment are increasing statewide, and the thresholds for scoring this measure are based on a comparison with regional trends.

1. Percentage change of per capita income over a 10 year period — *56* percent

Data Requirements: U.S. Census Bureau, 2010 ACS 5-Year American Community Survey for 2010 per capita income ; U.S. Census Bureau, 2000 Census Summary File 3 for 2000 per capita income
US Census - American Fact Finder

Method: Compute the percent change in per capita income over a ten year period for each block group within the station area. Then compute the average change of all the block groups within the half-mile station area radius, weighted by area.

2. Percentage change of the percent of the population (age 25+) that has a bachelor's degree or higher over a 10 year period — *27.4* percent

Data Requirements: U.S. Census Bureau, 2010 ACS 5-Year American Community Survey for 2010 figure; U.S. Census Bureau, 2000 Census Summary File 3 for 2000 figure (Percent bachelor's degree of higher for both sexes)
US Census - American Fact Finder
Method: Compute the percent change in the population that has a bachelor's degree or higher over a ten year period for each block group within the station area. Then compute the average change of all the block groups within the half-mile station area radius, weighted by area.

Physical Measures

Transit Travel Shed (Readiness Measure 11 of 20)

The Transit Travel Shed measure uses the Center for Neighborhood Technology's (CNT) All Transit tool. This tool includes a job accessibility measure that calculates the number of jobs accessible by public transportation within 30 minutes.

Enter the value provided by the All Transit Tool indicating the number of jobs accessible within 30 a minute transit ride from the station area. — *61,236* jobs
All Transit Tool

Method: Open the CNT All Transit tool (link provided above). Search for an address near the center of the station area. Select the "block group" scale. Next, click the "transit access score" drop down menu and select "Jobs accessible in 30 minute transit ride." The tool will then provide the number of jobs.

Transit Service & Infrastructure (Readiness Measure 12 of 20)

The Transit Service & Infrastructure measure evaluates a station area's existing and proposed transit service and existing and proposed transit infrastructure. The thresholds are differ depending on the station area's envisioned Place Type and Transit Type. Place Types and Transit Types are based on the Florida TOD Framework and Guidebook, and definitions are provided in the *Definitions* tab. The Transit Service & Infrastructure measure is evaluated through the following series of questions.

The Framework for TOD in Florida and the Florida TOD Guidebook are available online and can be found here: Framework for TOD in Florida; Florida TOD Guidebook

		Miami-Dade County
1a. Does the desired Transit Type currently serve the station area? (i.e. if the station area is envisioned to be served by a heavy rail station, does heavy rail currently serve the area?)	No	Rail is the desired transit type for this corridor in the SMART Plan
Please answer the following questions:		
1b. Is the desired transit service included in a long term vision plan?	Yes	Rail is the desired transit type for this corridor in the SMART Plan
1c. Is the desired transit service programmed in a cost feasible plan?	No	No

2. Does the existing transit service frequency meet the standards as specified in the Florida TOD Guidebook (see pages 2-6 to 2-9)?
Select the existing Transit Type serving the station area — Local or Express Bus
Enter the Peak Hour Service Frequency (in minutes) — *11* minutes

3. Does the existing transit station include supporting infrastructure, such as bicycle parking, pedestrian access, a shelter, and seating? Yes

4. Is the station area currently served by more than 1 mode of transit? No

Block Size (Readiness Measure 13 of 20)

Block size is measured as average block length. Block size can be calculated through a simple GIS exercise with a shapefile of the complete street network, including all local streets, county streets, and state roadways.

Enter the average block length (in feet) for the station area as computed in GIS. *360* feet

Data Requirements: Roadway shapefile(s) for all roadways within the station area

Method: The GIS analyst explodes the street network within the station area (an automated process that splits segment lengths at intersections) and computes the average segment length between intersections.

Path Connectivity (Readiness Measure 14 of 20)

The Path Connectivity measure requires a simple visual assessment of an aerial image (e.g. Google Earth) to determine whether any large barriers disrupt the street network, how frequently connections across the barrier are provided, and whether significant portions of the street network are disconnected.

Barriers to path connectivity may include highways, large arterials, waterways, railways, excessively long blocks, and other large scale infrastructure that disconnects the street network. To determine whether these features are barriers to connectivity, think critically about their scale and length, and how they are integrated into the surrounding urban form. This measure requires subjective judgment. Answer as best you can, and think about ways to improve connectivity over these barriers after you have completed the assessment.

Please select the descriptions that best characterize the street network within the study area.
Data Requirements: Aerial Imagery of station area.
Google Maps
Google Earth

1. Block Layout

Grid

Grid: A small-scale street pattern where local, public streets typically cross at four-way intersections with few or no dead ends. For the purpose of this tool, a grid does not have to contain a majority of perpendicular streets.

Superblock: Consists of a few, widely spaced arterial streets connecting to form a large block. Side streets may penetrate into the large block, but are typically private and are dead ends.

2. Barriers (see description above for more guidance on how to answer)

Major barrier(s) with several connections

Dixie Highway is major barrier with 5 crossings in the station area. 152nd street is also a major barrier. Moderatly connected street grid.

3. Street Connections

Few disconnected streets

Once a pedestrian reaches the east side of Dixie, the neighborhoo is relatively well connected.

Bicycle Comfort (Readiness Measure 15 of 20)

Bicycle comfort can be quantified by calculating the percentage of road centerline miles that have either very slow posted speeds (20 mph or less) or designated bicycle facilities. Please refer to the User Guide for a more detailed explanation of the reasoning for using these criteria.

The most readily available data source for speed limits on all roads, including state and local roads, is Navteq, which classifies roads according to categories of speeds in increments of 10 mph. For the purpose of this assessment, roads with speed limits of 20 mph or less are considered comfortable for bicyclists, as are any roads with a designated bicycle facility (e.g. 4 foot wide or wider bicycle lane or cycle track).

Enter the percentage of road centerline miles with posted speeds of 20 mph or less or with designated bicycle facilities. *7.9* percent

Data Requirements: Roadway network shapefile, Local bicycle facility shapefile, NAVTEQ Streets Data or other shapefile with speed limit data.

The local municipality usually maintains a GIS shapefile of the street network, which may include speed limit data and bicycle facility data. Local or regional agencies, such as MPOs, may also have bicycle facility data available. NAVTEQ data may be available from FDOT. Speed limit information may also be available from a local government or agency, depending on the data they have available.

Method: Compile the necessary data for the station area (half-mile radius surrounding the transit station). Compute the percentage of street centerline mile that have a designated bicycle facility and/or have a posted speed limit of 20 mph or less

Community Gathering Places (Readiness Measure 16 of 20)

The Community Gathering Places measure is the percentage of area within the half-mile radius station area that is considered to be parks or open space. This value can be calculated from the county or city tax assessor's GIS parcel shapefile.

Enter the percentage of land within the station area that is considered to be parks or open space.	*25*	percent

Data Requirements: County tax assessor parcel data

Method: Select all the parcels within the station area that have an existing use of park, open space, or similar designation. Compute the total acreage of the selected parcels and then divide the total by 502.65.

Social Measures

Diversity of Existing Uses within Walking Distance (Readiness Measure 17 of 20)

Walk Score (www.walkscore.com) provides a free analysis of the density and diversity of destinations that are within walking distance of a specified point. By simply entering the street address of the center point of the station area, Walk Score will provide a score from 0 to 100 of the surrounding area's walkable nature.

Enter the Walk Score value for the street address of the station area's center point. The link to the Walk Score website is provided below. Walk Score	*73*

Civic or Educational Uses (Readiness Measure 18 of 20)

The Civic or Educational Uses measure requires a qualitative assessment of the presence and size of civic, cultural, and educational facilities. This measure is evaluated through the following series of questions.

1. Is there a local elementary, middle, or high school within the station area?	Yes	Village Pines School
2. Is there at least one of the following within the station area: City Hall, Post Office, or similar government/ civic use?	No	Verify
3. Is there at least one of the following within the station area: Museum, Library, or cultural performance hall of local significance?	Yes	Coral Reef Branch Library
4. Is there at least one of the following within the station area: Museum, Library, or cultural performance hall of regional significance?	No	
5. Is there a college or university within the station area?	No	

Community Events & Branding (Readiness Measure 19 of 20)

The Community Events & Branding measure requires a qualitative assessment based on the following series of questions.

		Miami-Dade County
1. Does the station area have a well-known name or identity (e.g. Arts District)?	No	
2. Are regularly occurring community events hosted within the station area (e.g.	No	
3. Are special community events or festivals hosted within the station area (e.g. arts and crafts festival or Fourth of July celebration)?	No	Not in this area.
4. Does the station area take advantage of any unique physical or cultural attributes (e.g. culinary district, warehouses, historic architecture)?	No	

Housing & Transportation Affordability (Readiness Measure 20 of 20)

The Center for Neighborhood Technology calculates the percentage of household income that is devoted to housing and transportation costs, and provides this data for free at www.htaindex.org.

Enter the average H+T Affordability Index value for all the block groups within the station area. The link to the H+T Affordability Index website is provided below.

79

Housing & Transportation Affordability Tool

Method: Download the GIS H+T Affordability Index data from the website. Join this data to the station area block group data in GIS. Compute the weighted average value of all block groups within the station area for the "Regional Typical" Household type (ht_ami). For more information on the data, please see CNT's Data Dictionary. The link is provided below.

H+T Affordability Data Dictionary

Real Estate Values
Measure 8 of 20

Data Locations
ACS 2014 Raw Census Data
\\10.0.2.12\OrlData\GIS\Projects\FLdemographic\cenacs_2014
ACS 2014 Clipped Data DBF (Drag and drop file from explorer into Excel)
\\10.0.2.12\OrlData\GIS\Projects\MiamiDade\Avrprjs\SW152_MPO

Area of Block Groups 502.7 acres in station area

GEOID	Area (sft)	Area (acre)	% of Station Area
120860082021	6,444,263	147.94	29%
120860082023	28,218	0.65	0%
120860082063	2,988,252	68.60	14%
120860082081	856,603	19.66	4%
120860082093	75,806	1.74	0%
120860083045	321,955	7.39	1%
120860083051	6,074,655	139.45	28%
120860083061	5,102,077	117.13	23%
Total	**21,891,829**	**502.57**	**1.00**

ACS 2014 Home Value

GEOID	Median Home Value
120860082021	$ 367,500
120860082023	$ 396,600
120860082063	$ 444,700
120860082081	$ 158,800
120860082093	$ 419,800
120860083045	$ 114,000
120860083051	$ 424,300
120860083061	$ 241,700
Average	**$ 320,925**

ACS 2014 Median Gross Rent

GEOID	Median Gross Rent
120860082021	$ 780
120860082023	$ -
120860082063	$ 1,375
120860082081	$ 1,087
120860082093	$ -
120860083045	$ 542
120860083051	$ -
120860083061	$ 979
Average	**$ 595**

Home Values - Weighted Average

GEOID	Weighted Product
120860082021	$ 108,151.82
120860082023	$ 511.07
120860082063	$ 60,685.87
120860082081	$ 6,212.03
120860082093	$ 1,453.28
120860083045	$ 1,676.11
120860083051	$ 117,705.81
120860083061	$ 56,315.36
Weighted Average	**$ 352,711.36**

Median Gross Rent - Weighted Average

GEOID	Weighted Product
120860082021	$ 229.55
120860082023	$ -
120860082063	$ 187.64
120860082081	$ 42.52
120860082093	$ -
120860083045	$ 7.97
120860083051	$ -
120860083061	$ 228.10
Weighted Average	**$ 695.78**

Trends in Income & Educational Attainment Data
Percentage change of per capita income over a 10 year period
Readiness Measure 10 of 20

Trends in Income

2000 - Per Capita Income By Household

STFID	MEDHHINC	AVE_HH_SZ	Median Per Capita Income by Household (Calculated)	Area of Block Group (within Station area)	Weighted Income*Area
120860083041	39909	3.45	$ 11,568	7	80,975
120860082042	44643	3.03	$ 14,734	26	383,075
120860083061	48412	2.85	$ 16,987	108	1,834,560
120860083052	39402	2.44	$ 16,148	136	2,196,177
120860082033	65605	2.95	$ 22,239	153	3,402,564
120860082011	96397	2.92	$ 33,013	72	2,376,912
			$ 19,115	**502**	**10,274,264**

2014 - Per Capita Income by Household

GEOID	Median HH Income (ACS_14_5YR_B19013)	Average HH Size (Calculated [column H]: ACES_14_5YR_B11016_with_ann.csv)	Median Per Capita Income	Area of Block Group (Acres within Station area)	Weighted Income*Area
120860083045	39070	2.17	$ 18,005	7	126032
120860082093	132041	2.96	$ 44,608	2	89217
120860082023	86250	2.01	$ 42,910	1	42910
120860083051	108200	2.87	$ 37,700	139	5240348
120860083061	53913	2.87	$ 18,785	117	2197847
120860082081	41792	2.78	$ 15,033	20	300662
120860082021	46000	1.55	$ 29,677	147	4362581
120860082063	113617	2.28	$ 49,832	69	3438409
Total			**$ 42,759**	**502**	**15,798,007**

Percent Change in Weighted Income*Area
54%

Data Locations

Median HH Income (2014) \\10.0.2.12\OrlData\GIS\Projects\FLdemogr

Avg HH Size (2014) \\10.0.2.12\OrlData\GIS\Projects\FLdemogr

Trends in Educational Attainment

2000 - Educational Attainment (% of Block group with a bachelors degree)

STFID	PCT_BACHLR	Area of Block Group (within Station area)	Column1	Weighted Average (Area within Station Area)
120860083041	4.9	7	1%	0.1
120860082042	18.1	26	5%	0.9
120860083061	14.0	108	22%	3.0
120860083052	21.3	136	27%	5.8
120860082033	28.1	153	30%	8.6
120860082011	29.7	72	14%	4.3
Total		**502**	**1**	**22.6**

2014 - Educational Attainment (% of Block group with a bachelors degree)

GEOID	Percent of Bachelors (Bach/Total)	Area of Block Group (Acres within Station area)	Area of Block Group (Percent of total area)	Weighted Average (Area within Station Area)
120860083045	5.2	7	1%	0.1
120860082093	30.3	2	0%	0.1
120860082023	33.3	1	0%	0.1
120860083051	38.8	139	28%	10.7
120860083061	26.6	117	23%	6.2
120860082081	9.4	20	4%	0.4
120860082021	23.7	147	29%	6.9
120860082063	31.3	69	14%	4.3
Total		**502**		**28.8**

Percent Change in Weighted Average
27.4%

Data Locations

Education (2014) \\10.0.2.12\OrlData\GIS\Projects\FLdemogr ACS_14_5YR_B15003_metadata.csv

Parcels Per Block **Separated by quadrant (Busway & 152nd)**

NW Quadrant	SW Quadrant	NE Quadrant	SE Quadrant
2	27	8	6
2		8	5
6		8	21
6		8	1
5		8	11
10		8	12
16		10	1

1		10	16
10		9	11
16		9	10
21		33	11
29			6
1			7
11			14
10			26
5			18
2			14
			25
			15
			29
			4
			3
			4
			16
			14
			15
153	**27**	**119**	**315**

Total

Total Blocks	Total Parcels
55	614
Average Parcels per Block	**11.2**

Housing and Transportation Affordability
Percentage of Income dedicated to housing and transportation costs.
Readiness Measure 20 of 20

Trends in Income

GEOID	ht_ami	Area of Block Group (Acres within Station area)	Area of Block Group (Percent of total area)	Weighted Average (Area within Station Area)
120860083045	60	7	1%	1
120860082093	114	2	0%	0
120860082023	105	1	0%	0
120860083051	108	139	28%	30
120860083061	67	117	23%	16
120860082081	59	20	4%	2
120860082021	60	147	29%	18
120860082063	90	69	14%	12
Total		**502**		**79**

Understanding Opportunities for Transit Oriented Development: *An Analysis of Readines*

What is the TOD Readiness Tool?

Achieving transit oriented development (TOD) around a transit station is an evolutionary process with many factors driving readiness for TOD to take place. The TOD readiness tool:

- Provides planners with a simple assessment of readiness for any area - urban or rural, large or small, with or without existing or proposed transit service (below)
- Helps planners determine strategies to increase readiness in response to the assessment (see back page)

The following 20 measures assess how 'ready' an area is for TOD to happen. The goal is not necessarily to achieve full circles for every measure, but rather to understand the strengths and weaknesses of the area and build upon them. The accompanying User Guide describes how to evaluate each measure. The measures are sensitive to the different station area place types as defined in the Framework for TOD in Florida[1].

LEGEND:

- Conditions in earliest stage of development
- Conditions moving towards TOD
- Conditions supportive of TOD

Station Area

Local Government: *Miami-Dade County*

Station Area Name: *152nd Street Busway Station*

Station Area Type: *Neighborhood Center*

Future Transit Type: *Light Rail*

20 MEASURE ASSESSMENT

	EXISTING CONDITIONS	READINESS
POLICY	**Compelling Vision:** A clearly articulated adopted vision of the scale, intensity, character, amenities, and locale of development is a paramount first step towards TOD.	
	Supportive Regulations: Land use and land development regulations that control densities, land use mix, pedestrian-oriented design and parking strategies are the regulatory 'teeth' to implement the vision.	
	Predictable and Consistent Political and Development Context: Cities with a consistent and receptive approach towards development and a predictable timeline for approval and permitting processes are more attractive to developers.	
	Affordable Housing Policies: Policies to maintain a diverse housing stock with workforce housing increases access to transit and ridership potential.	
	Public Investment: Capital program planning, infrastructure investments and related financial incentives ensure adequate capacity for higher density development and demonstrate public sector commitment.	
MARKET	**Recent Development Activity:** Proposed, under construction, and new residential, mixed-use and commercial development indicate developer interest.	
	Redevelopment Potential: The ease with which redevelopment can occur based on underutilized or vacant parcels, land uses, parcel size, and ownership.	
	Real Estate Values: Property values measure market strength and the desire for compact development.	
	Financial Incentives for Development: Mixed-use TOD projects are typically more expensive to construct and may require financial incentives to bridge the gap in a project's pro forma.	
	Trends in Income and Educational Attainment Data: Increases in income and education levels indicate a growing interest in the neighborhood and the potential for capturing choice ridership.	
PHYSICAL	**Transit Travel Shed:** The number of jobs accessible by transit influences how desirable a station area is to potential new businesses or residents.	
	Transit Service and Infrastructure: Areas with existing or funded transit service are more likely to attract development. The type of transit service and the amenities at the station are also influential.	
	Block Size: Smaller block sizes promote pedestrian scaled development and walkability.	
	Path Connectivity: Physical barriers to connectivity inhibit pedestrian and bicyclist access to transit, shopping, jobs, and services.	
	Bicycle Comfort: Accommodating bicyclists can expand transit station catchment areas far beyond the typical pedestrian shed.	
	Community Gathering Places: Parks, public plazas and squares, and other areas of public open space are essential amenities and social catalysts for TOD.	
	Diversity of Existing Uses:	

READINESS ASSESSMENT

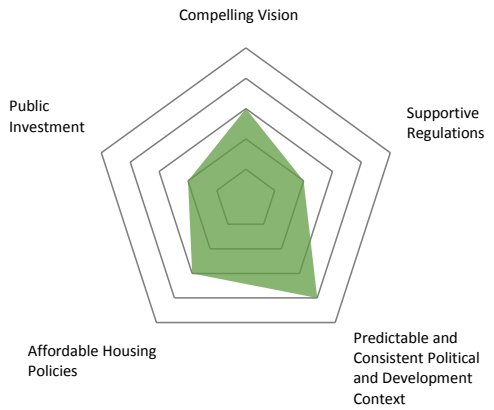

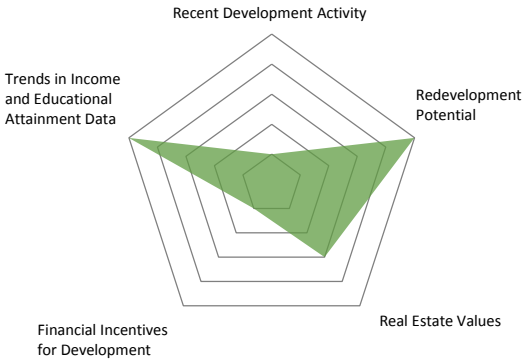

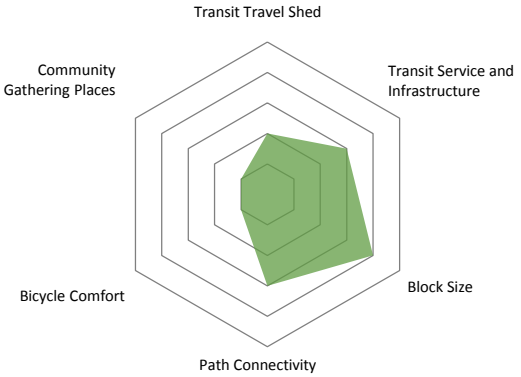

SOCIAL

A measure of whether daily errands can be made by walking as determined by Walk Score.

Civic or Educational Uses:

Civic, cultural and educational institutions can function as anchors for development and as destinations attracting people to the station area.

Community Events and Branding:

Hosting community events can develop an identity for the area, celebrating its unique character and market the area as an attractive place.

Housing and Transportation Affordability:

Affordability of living in a location depends on the combined costs of housing and transportation, and captures the location-efficiency of the area.

ASSESSMENT

STRENGTHS:

The station area is located along a Miami-Dade County SMART Plan Corridor. It contains a variety of uses and excellent opportunities for redevelopment. The station area has larger parcels that could present opportunities for redevelopment.

WEAKNESSES:

The station contains opportunities for establishing a strong vision and updated policies to support that vision including increasing densities and intensities. The station area needs to overcome barriers presented by major roadways and improve bicycle safety.

Understanding Opportunities for Transit Oriented Development: *An Analysis of Readiness*

Next Steps: Developing Strategies

Once the assessment is complete, a community can begin to identify strategies to build upon the area's strengths and address weaknesses.

A critical first step to achieving TOD is articulating a clear and compelling vision for the area that can guide the rest of the community's efforts.

Planners should use the assessment to think critically about their strengths and weaknesses and determine the best strategies for their unique community.

The strategies should address specific opportunities to increase a community's readiness for TOD.

Does STATION Have a Compelling Vision?

The 152nd Street Busway Station will be evaluated during SMART Plan planning efforts.

Station Area Vision

A potential development in the 152nd Street station area could have characteristics that can be seen in this image. These characteristics include a pedestrian oriented environment and increased development intensity.

STRATEGIES

POLICY

Policy Strategy 1 The SMART Plan Planning effort should include a clear vision for the station areas and should include a visual component if possible. This will help development partners (elected officials, local government staff, and developers) visualize the desired outcome. Each partner can then use this visulazation in their individual actions (planning, designing, etc.). The City and County can begin pursuing policy changes to emphasize form, massing, setback, and other standards, and increase densities and intensities that are appropriate for the station area's future rail service. The City and County can also begin to invest in the infrastructure needed to support increases in density and intensity.

Policy Strategy 2 Initiate efforts to increase densities and intensities in the station area to support TOD and reevaluate existing subdivision and other land development regulation standards to ensure that new development utilizes a pedestrian friendly, compact, gridded street network.

MARKET

Market Strategy 1 Conduct a market assessment of the station area to evaluate market gaps. Consider coordinating the study with the City of Palmetto Bay.

Market Strategy 2 Create a local incentive program to support the type of development envisioned in the station area. This programs could include land banks, density easements, Flroida Housing Finance Corporation programs, tax credit financing, and impact or development fee credits. This action can spur development activity and support realestate values.

PHYSCIAL

Physical Strategy 1 Develop a strategy to help to pedestrians and bicyclists cross major barriers (152nd street and Dixie Hightway) safely and quickly. Consider reducing the street speed on local streets to 20 mph or less to increase bicycle and pedestrian safety in the station area.

Physical Strategy 2 Establish community gathering places in the station area. This could potentially be accomplished through redevelopment efforts. Currently, a large parking lot surrounds the busway station and provides a development opportunity.

SOCIAL

Social Strategy 1 Initiate a branding effort for the station area that helps the station area develop an identity. Consider coordinating with the City of Palmetto Bay to support this effort by organizing regularly occuring events in the station area.

Social Strategy 2 Develop policies and programs that support housing and transportaiton affordability.

TAKE AWAY:

The 152nd Street station area is a promising opportunity to create an exceptional TOD. The potential for redevelopment is incredibly strong, educational attainment and incomes are rising, and the station area's land use and transportation bones can support TOD. By developing a stong vision for the station area, and supporting that vision with updated policies and marketing efforts, the City and County can create a foundation for TOD success.

The definitions presented here are based on the Framework for TOD in Florida and the Florida TOD Guidebook.

Framework for TOD in Florida Florida TOD Guidebook

The definitions are listed in alphabetical order. For additional information, please see the Framework for TOD in Florida or the Florida TOD Guidebook

Intermodal Hub

A transit station that connects two or more modes of transportation

Local Bus Hub or Transfer Station

Is considered to be a premium transit station if it serves a minimum of three fixed routes operating with headways of 21-30 minutes or less.

Place Types

A place type refers generally to the characteristics of density, diversity, and design present for a specific geography. For the purpose of this tool, the three place types identified in the Framework for TOD in Florida are used for defining threshold values and scores. These place types reflect the range of transit supportive community development patterns in Florida.

Regional Center

Centers of economic and cultural significance, including downtowns and central business districts, which serve a regional travel market and are served by a rich mix of transit types ranging from high speed, heavy or commuter rail to BRT and local bus service. Regional Centers are larger in size than Community Centers or Neighborhood Centers and tend to contain more than one transit station and multiple bus stops. Small block sizes, more lot coverage, higher intensities and densities of development, civic open spaces, and minimal surface parking result in a highly urban development pattern.

Community Centers

Function as sub-regional or local centers of economic and community activity and include urban and town centers served by one or more transit types. More intense or dense development in Community Centers tends to be concentrated within walking distance of the transit station. The pattern of development ranges from urban to suburban. Block sizes, lot coverage, and development intensities and densities tend to be moderate.

Neighborhood Centers

Are dominated by residential uses and are served by some type of premium transit. Non-residential uses are limited to local-serving retail and services. Residential densities tend to be lower than in Community Centers and at their highest within walking distance of the transit station. Neighborhood Centers are found in older urban areas and newer suburban developments.

Premium Transit Station

A station serving a premium type or types of transit or a station that functions as a local bus hub. Park and ride lots adjacent to a transit station are also included in this definition.

Premium Transit Types

Heavy Rail and Commuter Rail

A rail-based technology consisting of large, high passenger capacity cars and typically realizes operational efficiency through large passenger volumes. These transit types operate along exclusive, dedicated rail right-of-way. The travel shed is regional in nature, spanning many miles, and stations tend to be located farther apart.

Light Rail

A rail-based technology consisting of smaller cars with lower passenger capacity compared to heavy rail and commuter rail. Light rail can operate in dedicated rail or shared right of way. The optimal travel shed is typically less than then commuter rail travel shed.

Modern Streetcar

An electric vehicle based technology that runs on rails typically located in existing rights of way. Modern streetcars typically operate as urban circulators oriented towards shorter trips. Stations are located close together with a heavy emphasis on walk access. Streetcar alignments are often located in shared traffic lanes but can also be located in dedicated rail right-of-way.

Bus Rapid Transit or Local/Express Bus

A rubber wheel-based technology that operates in mixed traffic/shared lanes or in dedicated right-of-way. Operational efficiency is maximized in dedicated right-of-way operation, but transit signal priority and other means can assist travel speeds when operated in mixed traffic.

High-Speed Rail and Express Intercity Passenger Rail

A high passenger volume, high speed service located in dedicated rail right-of-way connecting centers of population and employment located approximately 80 to 500 miles apart. High-speed rail stations tend to located far apart and sited within regional urban centers or at locations serving as major regional intermodal hubs.

Station Area

One-half mile or approximately 500 acres around a transit stations composed of the transit core and transit neighborhood. The benefits of TOD and planning for TOD do not necessarily stop at the one-half mile radius. However, for the purpose of analysis, the one-half mile radius is a well established distance corresponding to the distance people are willing to walk to access premium transit.

About this sheet

This sheet computes the points for each question using the input from the orange and yellow cells in the "Assessment Form" tab. The "Scoring Criteria" column describes the scoring system or references another sheet where a more detailed analysis is performed. Columns labeled "Points" compute the points from the orange cells in the "Assessment Form" tab. Columns labeled "Value" simply transpose the values from the yellow cells in the "Assessment Form" tab. The "Thresholds" sheet uses the data in the "Points" and "Values" columns to compute the readiness score for each measure.

The scoring criteria are described in more detail in the User Guide. It is possible to change the scoring criteria in this sheet if desired.

1. The sheet must first be unlocked. The password is available upon request. To request the password, email TOD@citiesthatwork.com.
2. Any changes made to the criteria in this sheet will require corresponding changes to the "Thresholds" sheet.
3. Revising the criteria requires changing the equations in the cell under the "Points" column for the desired question. These equations include several Excel functions, including "IF", "AVERAGE", and "VLOOKUP."

For more information on the assumptions and thresholds, please see the following:

User Guide

ReadMe tab section on "What if I want to change the assumptions?"

Compelling Vision (Measure 1)		
Question	**Points**	**Scoring Criteria**
1a	1	*1 point if yes*
1b	1	*1 point if yes*
2	1	*1 point if yes*
3	0	*1 point if yes*
4	0	*1 point if yes*
5	1	*1 point if yes*
6a	0	*1 point if yes*
6b	1	*1 point if yes*
6c	0	*1 point if yes*
7	1	*1 point if yes*

Supportive Regulations (Measure 2)		
Question	**Points**	**Scoring Criteria**
1	1	*1 point if yes*
2	0	*1 point if yes*
3	0	*1 point if yes*
4a	0.2	*up to 0.5 points*
4b	0.1	*up to 0.5 points*
4c	0.1	*up to 0.5 points*
4d	0.2	*up to 0.5 points*
4e	0.1	*up to 0.5 points*

4f	0.2	*up to 0.5 points*
4g	0.1	*up to 0.5 points*
4h	0.1	*up to 0.5 points*
4i	0.3	*up to 0.5 points*
5	0	*1 point if yes*
6	0.5	*0.5 points if yes*
7	0	*1 point if yes*

Predictable & Consistent Political & Development Context (Measure 3)

Question	Points	Scoring Criteria
1	3	*up to 5 points*
2	5	*up to 5 points*
3	5	*up to 5 points*
4	0	*up to 5 points*
5	5	*up to 5 points*

Affordable Housing Policies (Measure 4)

Question	Points	Scoring Criteria
1a	0	*0.5 points if yes*
1b	0	*Additional 1.5 points if mandatory*
2	1	*1 point if yes*
3	1	*1 point if yes*
4	1	*1 point if yes*
5a	1	*1 point if yes*
5b	0	*1 point if recommendations implemented*

Public Investment (Measure 5)

Question	Points	Scoring Criteria
1	1	*1 point if yes*
2	0.5	*0.5 points if yes*
3	0	*0.5 points if yes*
4	0	*1.5 points if yes*
5	0	*1.5 points if yes*
6	0	*0.5 points if yes*

Recent Development Activity (Measure 6)

Question	Value	Scoring Criteria
1	0	*See Thresholds Sheet*

Redevelopment Potential (Measure 7)

Question	Points	Scoring Criteria
1	5	*See RedPotential Sheet*
2a	5	*See RedPotential Sheet*
2b	3	*See RedPotential Sheet*
3	4	*See RedPotential Sheet*

Real Estate Values (Measure 8)		
Question	**Points**	**Scoring Criteria**
1	5	*See CensusData Sheet*
2	1	*See CensusData Sheet*

Financial Incentives for Development (Measure 9)		
Question	**Points**	**Scoring Criteria**
1a	0	*1 point if yes*
1b	0	*3 points if no(and remaining questions are not needed)*
2	0	*up to 2 points (1 point for each incentive program)*
3	0	*1 point if yes*

Trends in Income & Educational Attainment Data (Measure 10)		
Question	**Value**	**Scoring Criteria**
1	83.4	*See Thresholds Sheet*

Transit Travel Shed (Measure 11)		
Question	**Value**	**Scoring Criteria**
1	61236	*See Thresholds Sheet*

Transit Service & Infrastructure (Measure 12)		
Question	**Points**	**Scoring Criteria**
1a	0	*3 points if yes*
1b	1	*1 point if yes*
1c	0	*1 point if yes*
2	2	*2 points if criteria are met*
3	1	*up to 1 point*
4	0	*1 point if yes*

Block Size (Measure 13)		
Question	**Value**	**Scoring Criteria**
1	360	*See Thresholds Sheet*

Path Connectivity (Measure 14)		
Question	**Points**	**Scoring Criteria**
1	1	*1 point if Grid Pattern*
2	1	*up to 3 points*
3	1	*up to 2 points*

Bicycle Comfort (Measure 15)		
Question	**Value**	**Scoring Criteria**
1	7.9	*See Thresholds Sheet*

Community Gathering Places (Measure 16)

Question	Value	Scoring Criteria
1	25	*See Thresholds Sheet*

Diversity of Existing Uses within Walking Distance (Measure 17)		
Question	**Value**	**Scoring Criteria**
1	73	*See Thresholds Sheet*

Civic or Educational Uses (Measure 18)		
Question	**Points**	**Scoring Criteria**
1	1	*1 point if yes*
2	0	*1 point if yes*
3	1	*1 point if yes*
4	0	*2 points if yes*
5	0	*2 points if yes*

Community Events & Branding (Measure 19)		
Question	**Points**	**Scoring Criteria**
1	0	*1 point if yes*
2	0	*1 point if yes*
3	0	*1 point if yes*
4	0	*2 points if yes*

Housing & Transportation Affordability (Measure 20)		
Question	**Value**	**Scoring Criteria**
1	79	*See Thresholds Sheet*

About this sheet

This sheet contains the scoring thresholds for each of the measures, which are shown in yellow. For each measure, the "Total Points" column pulls in the sum or average number of points for each measure from the "IndScores" sheet, and compares this value to the scoring threshold values to determine the measure's readiness score.

The thresholds are described in more detail in the User Guide. It is possible to change the thresholds in this sheet if desired.

1. The sheet must first be unlocked. The password is available upon request. To request the password, email TOD@citiesthatwork.com.
2. Changes made to the criteria in this sheet may require corresponding changes to the "IndScores" sheet.
3. There are a number of ways to revise the thresholds. The Threshold values in the yellow cells may be adjusted by substituting in a desired value in place of an existing value. The scoring criteria and thresholds can be further customized by changing the equations in the cells under the "Total Points" and/or "Measure Score" column for the desired measure. These equations include several Excel functions, including "IF", "AVERAGE", and "VLOOKUP."

For more information on the assumptions and thresholds, please see the following:

User Guide

ReadMe tab section on "What if I want to change the assumptions?"

Calculation	Denotes cells that include a calculation
Threshold	Denotes cells that include threshold values

		Scoring Thresholds										
		1		2		3		4		5		
Measure	**Total Points**	from	to	from	to	from	to	from	to	from	to	**Measure Score**
Compelling Vision	6	0	2	3	4	5	6	7	8	9	10	3
Supportive Regulations	2.9	0	1.9	2	3.9	4	5.9	6	7.9	8	10	2
Predictable & Consistent Political & Development Context	18	0	5	6	10	11	15	16	20	21	25	4
Affordable Housing Policies	4	0	1	1.5	2.5	3	4	4	5.5	6	7	3
Public Investment	1.5	0	1	1.5	2	2.5	3.5	4	4.5	5	5.5	2
POLICY MEASURE												2.8
Recent Development Activity	0		0		1		2		4	5		1
Redevelopment Potential	4.333333333		1		2		3		4	5		5
Real Estate Values	3		1		2		3		4	5		3
Financial Incentives for Development	0		0		1		2		3	4		1
Trends in Income & Educational Attainment Data	83.4		0	0	10		20		40	40		5
MARKET MEASURE												3
Transit Travel Shed	61236		50,000		100,000		200,000		300,000	300,001		2
Transit Service & Infrastructure	4	0	1	1.5	2.5	3	4.5	5	5.5	6		3
Block Size	360		1000		500		400		350	350		4
Path Connectivity	3		0		2		3		4		6	3
Bicycle Comfort	7.9		25		50		75		90		100	1
Community Gathering Places	25		1		2		3.5		5	5	8.5	1
		16		12.5		10.5		8.5				LEAVE BLANK
PHYSICAL MEASURE												2.333333333
Diversity of Existing Uses within Walking Distance	73	0	24	25	49	50	69	70	89	90	100	4
Civic or Educational Uses	2		0		1		2		3		4	3
Community Events & Branding	0		0		1		2		3		4	1
Housing & Transportation Affordability	79	65		60		50		45			45	1
SOCIAL MEASURE												2.25

Notes on columns: *values from "IndScores" sheet* *Scoring thresholds based on the descriptions in the User Guide* *Scores based on comparison of TOTAL POINTS to THRESHOLD VALUES*

About this sheet

This sheet contains the scoring threshold for the redevelopment potential measure. The "IndScores" sheet references these values when computing the score for each of the attribute/questions that assess this measure. For more information on these thresholds, see the TOD Readiness Tool User Guide.

The scoring criteria are described in more detail in the User Guide. It is possible to change the scoring criteria in this sheet if desired.

1. The sheet must first be unlocked. The password is available upon request. To request the password, email TOD@citiesthatwork.com.
2. Changes made to the criteria in this sheet may require corresponding changes to the "Thresholds" sheet.
3. Revising the criteria requires changing values in the yellow cells.

For more information on the assumptions and thresholds, please see the following:
User Guide
ReadMe tab section on "What if I want to change the assumptions?"

Thresholds for Redevelopment Potential

Vacant and Underutilized Parcels

Score	1	2	3	4	5
Percent	10	20	30	40	

Parcel Ownership

Score	1	2	3	4	5
owners	2.4	2.1	1.8	1.6	

Parcel Size

Score	1	2	3	4	5
parcels	15	12	8	5	

Single Family Land Use

Score	1	2	3	4	5
percent	90	75	40	25	

About this sheet

This sheet incorporates US Census Data to inform the thresholds for the "Real Estate Values" measure.

The scoring criteria are described in more detail in the User Guide. It is possible to change the scoring criteria in this sheet if desired.

1. The sheet must first be unlocked. The password is available upon request. To request the password, email TOD@citiesthatwork.com.
2. Changes made to the criteria in this sheet may require corresponding changes to the "Thresholds" sheet.
3. Revising the criteria requires changing values in the yellow cells.

For more information on the assumptions and thresholds, please see the following:

User Guide

ReadMe tab section on "What if I want to change the assumptions?"

1	2	3	4	5	6	7	8	9	10	11	12	13	14
												Rent Value Thresholds	
					Home Value Thresholds (% of median value)						(% of median value)		
County	**MSA**	**Median Home Value**	**Median Gross Rent**		**75%**	**90%**	**110%**	**125%**		**75%**	**90%**	**110%**	**125%**
Lee	Cape Coral-Fort Myers	$149,400	$943		$112,050.00	$134,460.00	$164,340.00	$186,750.00		$707.25	$848.70	$1,037.30	$1,178.75
Okaloosa	Crestview-Fort Walton Beach-Destin	$177,400	$995		$133,050.00	$159,660.00	$195,140.00	$221,750.00		$746.25	$895.50	$1,094.50	$1,243.75
Walton					$133,050.00	$159,660.00	$195,140.00	$221,750.00		$746.25	$895.50	$1,094.50	$1,243.75
Gilchrist	Gainesville	$163,300	$884		$122,475.00	$146,970.00	$179,630.00	$204,125.00		$663.00	$795.60	$972.40	$1,105.00
Alachua					$122,475.00	$146,970.00	$179,630.00	$204,125.00		$663.00	$795.60	$972.40	$1,105.00
Citrus	Homosassa Springs	$117,400	$790		$88,050.00	$105,660.00	$129,140.00	$146,750.00		$592.50	$711.00	$869.00	$987.50
Clay	Jacksonville	$163,600	$955		$122,700.00	$147,240.00	$179,960.00	$204,500.00		$716.25	$859.50	$1,050.50	$1,193.75
Duval					$122,700.00	$147,240.00	$179,960.00	$204,500.00		$716.25	$859.50	$1,050.50	$1,193.75
Baker					$122,700.00	$147,240.00	$179,960.00	$204,500.00		$716.25	$859.50	$1,050.50	$1,193.75
St. Johns					$122,700.00	$147,240.00	$179,960.00	$204,500.00		$716.25	$859.50	$1,050.50	$1,193.75
Nassau					$122,700.00	$147,240.00	$179,960.00	$204,500.00		$716.25	$859.50	$1,050.50	$1,193.75
Polk	Lakeland-Winter Haven	$111,400	$862		$83,550.00	$100,260.00	$122,540.00	$139,250.00		$646.50	$775.80	$948.20	$1,077.50
Broward	Miami-Fort Lauderdale-West Palm Beach	$194,300	$1,126		$145,725.00	$174,870.00	$213,730.00	$242,875.00		$844.50	$1,013.40	$1,238.60	$1,407.50
Miami-Dade					$145,725.00	$174,870.00	$213,730.00	$242,875.00		$844.50	$1,013.40	$1,238.60	$1,407.50
Palm Beach					$145,725.00	$174,870.00	$213,730.00	$242,875.00		$844.50	$1,013.40	$1,238.60	$1,407.50
Collier	Naples-Immokalee-Marco Island	$261,300	$1,020		$195,975.00	$235,170.00	$287,430.00	$326,625.00		$765.00	$918.00	$1,122.00	$1,275.00
Manatee	North Port-Bradenton-Sarasota	$170,900	$972		$128,175.00	$153,810.00	$187,990.00	$213,625.00		$729.00	$874.80	$1,069.20	$1,215.00
Sarasota					$128,175.00	$153,810.00	$187,990.00	$213,625.00		$729.00	$874.80	$1,069.20	$1,215.00
Marion	Ocala	$119,400	$822		$89,550.00	$107,460.00	$131,340.00	$149,250.00		$616.50	$739.80	$904.20	$1,027.50
Lake	Orlando-Kissimmee-Sanford	$161,800	$1,019		$121,350.00	$145,620.00	$177,980.00	$202,250.00		$764.25	$917.10	$1,120.90	$1,273.75
Orange					$121,350.00	$145,620.00	$177,980.00	$202,250.00		$764.25	$917.10	$1,120.90	$1,273.75
Osceola					$121,350.00	$145,620.00	$177,980.00	$202,250.00		$764.25	$917.10	$1,120.90	$1,273.75
Seminole					$121,350.00	$145,620.00	$177,980.00	$202,250.00		$764.25	$917.10	$1,120.90	$1,273.75
Brevard	Palm Bay-Melbourne-Titusville	$144,900	$899		$108,675.00	$130,410.00	$159,390.00	$181,125.00		$674.25	$809.10	$988.90	$1,123.75
Gulf	Panama City	$155,800	$925		$116,850.00	$140,220.00	$171,380.00	$194,750.00		$693.75	$832.50	$1,017.50	$1,156.25
Bay					$116,850.00	$140,220.00	$171,380.00	$194,750.00		$693.75	$832.50	$1,017.50	$1,156.25
Charlotte	Punta Gorda	$143,700	$912		$107,775.00	$129,330.00	$158,070.00	$179,625.00		$684.00	$820.80	$1,003.20	$1,140.00
Indian River	Sebastian-Vero Beach	$157,400	$854		$118,050.00	$141,660.00	$173,140.00	$196,750.00		$640.50	$768.60	$939.40	$1,067.50
Highlands	Sebring	$93,600	$719		$70,200.00	$84,240.00	$102,960.00	$117,000.00		$539.25	$647.10	$790.90	$898.75
Jefferson	Tallahassee	$167,000	$899		$125,250.00	$150,300.00	$183,700.00	$208,750.00		$674.25	$809.10	$988.90	$1,123.75
Gadsden					$125,250.00	$150,300.00	$183,700.00	$208,750.00		$674.25	$809.10	$988.90	$1,123.75
Leon					$125,250.00	$150,300.00	$183,700.00	$208,750.00		$674.25	$809.10	$988.90	$1,123.75
Wakulla					$125,250.00	$150,300.00	$183,700.00	$208,750.00		$674.25	$809.10	$988.90	$1,123.75
Hernando	Tampa-St. Petersburg-Clearwater	$146,500	$943		$109,875.00	$131,850.00	$161,150.00	$183,125.00		$707.25	$848.70	$1,037.30	$1,178.75
Hillsborough					$109,875.00	$131,850.00	$161,150.00	$183,125.00		$707.25	$848.70	$1,037.30	$1,178.75
Pasco					$109,875.00	$131,850.00	$161,150.00	$183,125.00		$707.25	$848.70	$1,037.30	$1,178.75
Pinellas					$109,875.00	$131,850.00	$161,150.00	$183,125.00		$707.25	$848.70	$1,037.30	$1,178.75
Sumter	The Villages	$194,100	$827		$145,575.00	$174,690.00	$213,510.00	$242,625.00		$620.25	$744.30	$909.70	$1,033.75

Source: U.S. Census Bureau, 2009-2013 5-Year American Community Survey (Metropolitan Statistical Area Geography)

About this sheet

This sheet contains the recommended service frequencies for each transit type as outlined in the Framework for TOD in Florida. The maximum values for peak hour frequencies (shown in yellow) are used as the threshold values for scoring question 2 of the Transit Service & Infrastructure measure.
The scoring criteria are described in more detail in the User Guide. It is possible to change the scoring criteria in this sheet if desired.

1. The sheet must first be unlocked. The password is available upon request. To request the password, email TOD@citiesthatwork.com.
2. Changes made to the criteria in this sheet may require corresponding changes to the "Thresholds" sheet.
3. Revising the criteria requires changing values in the yellow cells.

For more information on the assumptions and thresholds, please see the following:
User Guide
ReadMe tab section on "What if I want to change the assumptions?"

		Service Frequency Standards (min)	
Existing Transit Type	**Values from Florida TOD Guidebook**	**Minimum**	**Maximum (Threshold Values)**
Express and Inter-City Passenger Rail	60 minutes (peak express), up to 12 daily (inter-city)	0	60
Heavy Rail	5-10 minutes (peak)	5	10
Commuter Rail	20-30 minutes (peak)	20	30
Light Rail	5-30 minutes	5	30
Modern Streetcar	8-15 minutes	8	15
Bus Rapid Transit (BRT)	8-20 minutes	8	20
Local or Express Bus	21-30 minutes (maximum) with no fewer than three fixed routes	21	30

About this sheet

These lists populate the drop down lists in the "Assessment Form" sheet

Each list is defined with a name. The name is the bold, underlined text over each list.

Transit Types	**Counties**	**Place Type**	**YesNo**	**ZeroToFive**	**OneToS**	**VolMan**	**FinancialIncentives**	**PlannedProgrammed**	**BlockLayout**	**Barriers**	**Connections**	**Example**
Heavy Rail	Alachua	Regional Center	Yes	0	1	Voluntary	0	Yes	Super Block	Major barrier(s) with one or no connections	Many disconnected streets	*Example Orange Input Box*
Commuter Rail	Baker	Community Center	No	1	2	Mandatory	1	No	Grid	Major barrier(s) with several connections	Few disconnected streets	
Light Rail	Bay	Neighborhood Center		2	3		2	No, but Planned & Programmed		Major barrier(s), but well integrated and connected	No disconnected streets	
Modern Streetcar	Brevard			3	4		3 or more			No major barriers		
Bus Rapid Transit (BRT)	Broward			4	5							
Local or Express Bus	Charlotte			5								
Express and Inter-City Passenger Rail	Citrus											
	Clay											
	Collier											
	Duval											
	Gadsden											
	Gilchrist											
	Gulf											
	Hernando											
	Highlands											
	Hillsborough											
	Indian River											
	Jefferson											
	Lake											
	Lee											
	Leon											
	Manatee											
	Marion											
	Miami-Dade											
	Nassau											
	Okaloosa											
	Orange											
	Osceola											
	Palm Beach											
	Pasco											
	Pinellas											
	Polk											
	Sarasota											
	Seminole											
	St. Johns											
	Sumter											
	Wakulla											
	Walton											

TOD Readiness Tool

Assessment Form

This worksheet contains a series of questions that evaluate the 20 measures of TOD readiness. Fill in the information requested in each orange or yellow box, and the tool will automatically calculate the readiness score based on the criteria and thresholds outlined in the User Guide. The results will display in the **Summary Sheet** tab. Use these results to identify strategies for increasing readiness and complete the 2-page summary template.

Please select a value for EACH orange box, and enter a value into EACH yellow box. Leave no orange or yellow boxes blank.

Example Orange Input Box

Example Yellow Input Box

To enter information into the orange boxes, click on the orange box. A grey down arrow will appear in a white box to the right of the orange box. Click on the grey down arrow to view the options for answering the question, and click on the answer you would like to select.

Yellow boxes also require inputs. Enter the appropriate number into each yellow box. The grey down arrow will not appear when you click on a yellow box. Please type the answer directly into the yellow box.

Background Information

1. Select the county in which the station area is located: Miami-Dade

2. Envisioned/Desired Transit Type Light Rail

Please refer to the Framework for TOD in Florida for the definitions of each Transit Type. This information is also provided in the "Definitions" tab of this tool.
Framework for TOD in Florida

3. Envisioned/Desired Place Type Neighborhood Center

Please refer to the Framework for TOD in Florida for the definitions of each Transit Type. This information is also provided in the "Definitions" tab of this tool.
Framework for TOD in Florida

Policy Measures

Compelling Vision (Readiness Measure 1 of 20)

Use critical thinking to evaluate the relative strength of your community's vision and supportive policies. This measure is named Compelling Vision, because its merit lies in the degree to which the vision *compels* decision makers to follow through.

When answering the questions below, please avoid simply 'checking the box' to indicate whether your community meets each criterion in name only. Rather, think critically about the strength of each criterion, ask yourself the questions below, and develop your own questions to assess the viability of each criterion:

Many of the questions reference the Framework for TOD in Florida. This document is available online and can be found here: Framework for TOD in Florida

Palmetto Bay

The City is currenly planning a TOD code along US 1 from SW 136th St. to SW 168th St. It may take the form of an overlay or a replacement zoning. It is unclear if a visioning process and resulting vision will guide development in the station.

1a. Does the area have a vision for the future in an adopted plan? Yes

1b. Does the vision include illustrative representations (e.g. pictures and/or renderings)? Yes

Please refer to the User Guide for a description of a compelling vision

2. Does the vision include language that is supportive of TOD? Yes

3. Does the vision include a map that orients development around a future transit station? Yes

4. Does the area have a station area plan that shows the desired layout of streets and buildings? No

5. Was the adopted vision and/or station area plan developed through a charrette process or other intensive public outreach effort?	Yes	
6. Does the Comprehensive Plan include (for the area under assessment):		
Transit-supportive densities (as specified in the Framework for TOD in Florida)?	Yes	Medium Density Residential allows 14-23 DU/Ac
A mix of uses (as specified in the Framework for TOD in Florida)?	Yes	Broad mix of uses within the station area. See below for additional detail.
Designations that exempt or modify concurrency requirements (e.g. MMTDs, Planned Mobility Districts, TCEAs, or TOCAs)?	No	East of 77th street is a TCEA. Station is west of 77th.
7. Has the community adopted a Complete Streets policy and/or bicycle and pedestrian plan(s)?	Yes	Policy 1.3.6 is only one that mentions complete streets: Identify alternative level-of-service components which support Complete Street elements such as bicycle capacity, pedestrian facilities, and multimodal options.

Supportive Regulations (Readiness Measure 2 of 20)

The following questions can provide some guidance on evaluating the degree to which land use and development regulations are supportive of TOD. Many of these questions are not specific to the area under assessment. They instead assess the regulatory context of the local government as a whole. Where appropriate, the user should ask these questions specifically for the area under assessment.

Many of the questions reference the Framework for TOD in Florida or the Florida TOD Guidebook. These documents are available online and can be found here:

Framework for TOD in Florida
Florida TOD Guidebook

		Palmetto Bay
1. Does the zoning code require the appropriate mix of uses for the TOD place type, as specified in the Framework for TOD in Florida?	Yes	FLUM Categories in the station area: - Business and Office - Office and Residential - Medium Density Residential - Low Density Residential - Estate Density Residential Zoning Districts in station area (see zoning map for densities and intensities): - B1, B2, R5, EM, E1, VMU
2. Does the zoning code require the transit supportive densities for the TOD place type, specified in the Framework for TOD in Florida?	Yes	Medium Density Residential allows 14-23 DU/Ac; Medium Density Res FLU is VMU zoning
3. Are the zoning regulations based on a form-based code (including but not limited to the SmartCode)?	Yes	**Yes, for the proposed downtown master plan along US 1 from SW 168th St. to SW 184th St. (elements of both code types). Otherwise, Euclidian. (Per Atkins)**
4. Are the development regulations consistent with the model land development regulations from the Florida TOD Guidebook? For each element below, assess the compatibility with the Florida TOD Guidebook. Rate the regulations for consistency on a scale of 0 to 5 for each element, with 5 being the most consistent and 0 being the least.		
Building Height	4	Recommend a four (4) because a significant portion of the area allows between 35 and 85 feet. Not a 5 because there is lower density single family residential in the station area. * VMU - Multifamily and Row houses shall not exceed 70 feet above grade * B1: 35 - 55 ft * B2: 75ft above crown of road
Building Placement	1	Large setbacks required, except in VMU. VMU does not provide guidance on building placement. Only max lot coverage.
Building Frontage	1	Large setbacks required, except in VMU. VMU frontage standards only requires a maxium 35% gross lot coverage. Few frontage requirements.
Density	3	Medium density FLU provides density in the station area. There are also low density districts within the station area.
Frontage Standards	1	VMU entrance features must be consistent with scale of property. Same for B-2. Few building façade standards.

Civic Open Space	2	Rockdale Pineland preserve. Golf course is zoned recreation, but not civic open space.
Building Façade Standards	1	VMU entrance features must be consistent with scale of property. Same for B-2. Few if any building façade standards.
Parking Standards	1	2 parking spaces per DU, 1 space per 250sft (Guidebook has 0-1 space per du and 1 space per 1000sft of most non-residential). Parking may be permitted in front of building, which is discouraged by Guidebook (See Guidebook 4-94 for parking section).
Street and Block Standards	3	City does not appear to have street and block standards. The area has relatively small blocks. Especially in the residential neighborhood. But there is an existing well connected street network.
5. Has the local government developed pedestrian-oriented, transit supportive, or other urban design guidelines that apply to this area? (See the City of Fort Lauderdale's TOD Guidelines for its Downtown Master Plan as an example.) City of Fort Lauderdale - TOD Guidelines	No	Not in quick links or online resources on website.
6. Are there parking reductions, maximums, shared parking, or other policies and initiatives lowering or removing parking requirements? For example, does the community have a parking management plan or other initiatives that are alternatives to parking minimums?	Yes	**Not now, but would be part of the planned TOD zoning, and may find their way into the downtown plan. (Per Atkins)**
7. Is there a Transportation Demand Management (TDM) Ordinance that applies to the area under assessment?	No	**No, but we are considering exploring a concurrency fee to fund multimodal improvements. (Per Atkins)**

Predictable & Consistent Political & Development Context (Readiness Measure 3 of 20)

The following questions provide guidance on how to think about the predictability and consistency of the political and development context. This measure is evaluated through the following criteria, represented as a series of questions. Each question has a range of point values associated with it, and several questions beneath to help users think critically about each criterion. Many of these questions require a subjective assessment. One may argue about whether to give a score of 2 or 3, or 4 or 5. Please note that the score itself is secondary to critically thinking about the political environment, and assessing where one's weaknesses and strengths lie, and to develop strategies that build upon the strengths and address weaknesses.

Rate the criteria on a scale of 1 to 5 for each element, with 5 being the highest and 1 the lowest. Below each question are some additional questions in italic font to help you rate the criteria.

		Palmetto Bay
1. Is there a predictable permitting process?	3	**The process is pretty good. (Per Atkins)**
Do you have a general sense of how long it takes to get a permit approved?		**A few days, but dealing with the County can increase timing.**
Do you have a stated goal of timely permitting approvals?		**Not explicitly, but City is service oriented.**
2. Is there consistency in the approval process? *Is there general agreement between elected officials (and within the general community) on the vision?*	4	**Not complete consistency. There is a vocal minority. BUT through surveys the City knows they have 70-80% majority public support for the town's initiatives.**
Do developments that meet the requirements in the regulations and codes generally get approved, or do elected officials generally oppose developments due to fears of traffic, crime, etc., even if they meet the requirements?		**Yes,Elected officials have a high degree of respect for the law.**
3. Is there a general willingness to work with developers?	5	**Yes, to the extent that there are opportunities to do so.**
Do developers perceive that staff and elected officials are willing to frequently communicate and find solutions in instances where codes are difficult to meet?		**Yes.**
Do elected officials demonstrate a willingness to generally work with developers to balance their needs with the city's vision, needs, and goals?		**Yes.**

4. Do the City Commission and Community Redevelopment Agency (CRA) share a common vision? *If there is a CRA, do the projects that are approved by the CRA also get approved by City Commission?*		
5. Is there a local champion (either elected official or community leader with general business or resident support) actively advocating for TOD? *A local champion for TOD could be a City Commissioner or a leader of a community organization who shows support for TOD (for example by consistently voicing the importance of TOD at meetings and other events, and through other community discussions).*	4	**Yes, the Town Manager.**

Affordable Housing Policies (Readiness Measure 4 of 20)

The following criteria (shown as a list of questions) assess a local government's or housing authority's level of effort in planning for affordable housing within the station area. Users should review the housing element of the local government's comprehensive plan for affordable housing policies and programs. Users should also review the land development regulations and zoning ordinance. Additional information from the local housing authority should also be considered.

		Palmetto Bay
1a. Does the zoning ordinance require inclusionary housing?	No	based on code review.
1b. If yes, is inclusionary housing voluntary or mandatory?		
2. Are there additional incentives for providing more than the minimum required affordable units (e.g. density bonuses, parking reductions, expedited permits, reduced fees, or cash subsidies)?	No	Density bonus for LEED certification
3. Has the local government undertaken efforts to leverage private investment in mixed income housing (e.g. through acquiring and assembling land, rezoning, funding environmental remediation through EPA grants, or by providing in-kind matches, in-lieu fees, or other government funding)?	No	**No.**
4. Is there a policy to direct affordable housing into the station area?	Yes	**No.**
5a. Has the local government or other entity conducted an assessment of affordable housing need?	Yes	**No.**
5b. If Yes, has the local government or other entity implemented the recommendations?		**n/a**

Public Investment (Readiness Measure 5 of 20)

The measure for public investment is evaluated through the following series of questions.

1. Has the community invested in bicycle facilities within the station area, or committed funds to the installation of bicycle facilities in the Capital Improvement Program (CIP) or MPO Transportation Improvement Program (TIP)?	Yes	**Town has several projects in the CIP for implementation. (Entered yes, although its not clear if these projects are located within the station area. There is a short-term priority project for 152nd street in the Bike/Ped Master Plan http://www.palmettobay-fl.gov/sites/all/files/pdf/Village%20Departments/Public%20Works/palmetto_bay_bpm_corradino_final_march_small.pdf)**
2. Has the community invested in pedestrian facilities within the station area, or committed funds to the construction of pedestrian facilities in the CIP or MPO TIP?	No	**No, as the town looks to the State and County for upgrades to their facilities.**
3. Has the community invested in streetscaping enhancements and landscaping, or committed funds to streetscaping projects in the CIP or MPO TIP?	Yes	**Yes.**
4. Has the community made an investment in utility infrastructure and maintenance to support desired densities and intensities, or committed funds to doing so in the CIP or MPO TIP?	No	**Not yet. Existing infrastructure can handle a large share of planned development which was sized in part to fit the capacity of roads and utilities. Developers will handle needed upgrades as part of their projects.**

5. Has the community made an investment via grants or other incentives to encourage private sector development of new buildings, or committed funds to doing so in the CIP or MPO TIP?

No **No.**

6. Does the local government offer incentives to renovate existing buildings, build façade improvements, or support local businesses within the area (e.g. through Florida's Main Street program)?

No **No.**

Market Measures

Recent Development Activity (Readiness Measure 6 of 20)

Recent development activity may include development projects that are proposed, approved, under construction, or recently completed. For the purpose of balancing accurate results, easily accessible data, and simple computations, this measure is based on the number of proposed, approved, and under construction multifamily, commercial, and mixed-use projects within the station area. The number of projects can be determined through a review of the Community Development or Zoning Department records on proposed developments and permits issued for construction and conversations with department staff.

Enter the number of proposed, approved, and under construction multifamily, commercial, and mixed-use projects (as described above) for the last 3 years.

Data Requirements: Local government records on development, including building permits. These records may be available from the local government's building department or planning department.

0 **None.**

Redevelopment Potential (Readiness Measure 7 of 20)

The measure for redevelopment potential is a composite of three different scores. GIS analysis of readily available data is required. The data requirements and analysis methods are described for each question below.

1. Vacant and underutilized properties

Acres of land where the improvement-to-land value ratio is less than 1.0

471.04 acres

Data Requirements: County tax assessor parcel data

Method: Compile the necessary data for the station area (1/2 mile radius surrounding the transit station). Compute the ratio of "improvement" to "land value" for each parcel. Add the acreage of all parcels where the ratio is < 1.0

2. Parcel size and ownership

2a. Number of unique property owners per acre: the number of unique owners divided by the sum of parcel acreage, excluding public right-of-way

1.126

Data Requirements: County or city tax assessor parcel data

Method: Sum of unique owners within the station area divided by the sum of the parcel acreage excluding public ROW

2b. Average parcel size: the number of parcels per block

11.2 parcels

Data Requirements: County or city tax assessor parcel data

Method: Calculate the number of parcels within each block in the station area. Then take the average across all blocks in the station area.

3. Land Use

The percentage of parcels that are non-vacant single-family residential

33.8 percent

Data Requirements: County or city tax assessor parcel data

Method: Select all parcels within the station area that have an existing use of single-family residential. Remove from this selection any parcels that are currently vacant. Compute the sum of the acreage of the remaining selected parcels and divide by 502.65.

$$\frac{\text{Total acres of non-vacant single family residential parcels}}{\text{502.65 acres within the half-mile radius station area}} \times 100$$

Real Estate Values (Readiness Measure 8 of 20)

The American Community Survey 3-year estimates provide data on median home value and median gross rent by census block group. Using GIS, compute the weighted average of the median home value and median gross rent for a station area. The Real Estate Values score takes the average of the median home value score and the median gross rent score.

1. Median home value — $ 352,711.36

Data Requirements: U.S. Census Bureau, 2011-2013 3-Year American Community Survey
US Census - American Fact Finder

Method: Compile the necessary shapefiles and tables to display median home value by census block group for the entire station area (half-mile radius surrounding the transit station). Compute the weighted average of the Median Home Value for each block group within the station area, based on the percentage of area of each census block group within the station area.

2. Median gross rent — $ 695.78

Data Requirements: U.S. Census Bureau, 2011-2013 3-Year American Community Survey
US Census - American Fact Finder

Method: Compile the necessary shapefiles and tables to display median gros s rent by census block group for the entire station area (half-mile radius surrounding the transit station). Compute the weighted average of the Median Home Value for each block group within the station area, based on the percentage of area of each census block group within the station area.

Financial Incentives for Development (Readiness Measure 9 of 20)

The measure for financial incentives for development evaluates the number of available financial incentive programs for development and whether these incentives have been used to build a project within the station area.

		Palmetto Bay
1a. Has a market assessment been conducted to determine if there are financial gaps to the type of development encouraged in the station area?	No	**The Town did a study 2-3 years ago looking as the South Dade market for residential and retail uses. Not specifically for this intersection, but as a pool of opportunity that could be captured within the Town. Entered no because a yes gives this a score of 5. Note that an updated market assessment conducted specifically for the station area would provide better data.**
1b. If a market assessment has been conducted, are financial incentives required for the type of development envisioned?	No	No

Please proceed to the next measure: Transit Travel Shed

2. Are local or regional financial incentive programs available for projects within the station area to encourage the desired development? Please select the number of such programs from the dropdown menu to the right.

Please list the name(s) of the program(s) in the spaces provided:

Examples of financial incentives for development include: Land banks, density easements, Florida Housing Finance Corporation programs , tax credit financing (especially for affordable housing), and impact and/or development fee credits for locating within a station area.

3. Have any of the financial incentives for development been applied towards the completion of a project meeting the vision of the station area?

Trends in Income & Educational Attainment Data (Readiness Measure 10 of 20)

The U.S. Decennial Census and American Community Survey's 3-year estimates provide data on income and educational attainment at the block group level. This measure is an average of two percentages, each of which are computed using a combination of the Decennial Census and ACS data:
1. Percentage change of per capita income over 10 years (e.g. a 20% increase from $48,000 in 2000 to $57,600 in 2010)
2. Percentage change of the percent of the population age 25+ that has a bachelor's degree or higher (e.g. a 40% increase from 15% in 2000 to 21% in 2010)

This measure reflects the desirability of the area from the market perspective. It is important to note that from a social equity perspective, increasing trends in income levels indicate that medium- and low-income households may not be able to afford to live in the station area in the future. It is important to maintain a diverse housing stock for a mix of incomes. It is also important to note that trends in income levels and educational attainment are increasing statewide, and the thresholds for scoring this measure are based on a comparison with regional trends.

1. Percentage change of per capita income over a 10 year period — *56* percent

Data Requirements: U.S. Census Bureau, 2010 ACS 5-Year American Community Survey for 2010 per capita income ; U.S. Census Bureau, 2000 Census Summary File 3 for 2000 per capita income
US Census - American Fact Finder

Method: Compute the percent change in per capita income over a ten year period for each block group within the station area. Then compute the average change of all the block groups within the half-mile station area radius, weighted by area.

2. Percentage change of the percent of the population (age 25+) that has a bachelor's degree or higher over a 10 year period — *27.4* percent

Data Requirements: U.S. Census Bureau, 2010 ACS 5-Year American Community Survey for 2010 figure; U.S. Census Bureau, 2000 Census Summary File 3 for 2000 figure (Percent bachelor's degree of higher for both sexes)
US Census - American Fact Finder
Method: Compute the percent change in the population that has a bachelor's degree or higher over a ten year period for each block group within the station area. Then compute the average change of all the block groups within the half-mile station area radius, weighted by area.

Physical Measures

Transit Travel Shed (Readiness Measure 11 of 20)

The Transit Travel Shed measure uses the Center for Neighborhood Technology's (CNT) All Transit tool. This tool includes a job accessibility measure that calculates the number of jobs accessible by public transportation within 30 minutes.

Enter the value provided by the All Transit Tool indicating the number of jobs accessible within 30 a minute transit ride from the station area. — *61,236* jobs
All Transit Tool

Method: Open the CNT All Transit tool (link provided above). Search for an address near the center of the station area. Select the "block group" scale. Next, click the "transit access score" drop down menu and select "Jobs accessible in 30 minute transit ride." The tool will then provide the number of jobs.

Transit Service & Infrastructure (Readiness Measure 12 of 20)

The Transit Service & Infrastructure measure evaluates a station area's existing and proposed transit service and existing and proposed transit infrastructure. The thresholds are differ depending on the station area's envisioned Place Type and Transit Type. Place Types and Transit Types are based on the Florida TOD Framework and Guidebook, and definitions are provided in the *Definitions* tab. The Transit Service & Infrastructure measure is evaluated through the following series of questions.

The Framework for TOD in Florida and the Florida TOD Guidebook are available online and can be found here: Framework for TOD in Florida; Florida TOD Guidebook

Palmetto Bay

1a. Does the desired Transit Type currently serve the station area? (i.e. if the station area is envisioned to be served by a heavy rail station, does heavy rail currently serve the area?)	No
Please answer the following questions:	
1b. Is the desired transit service included in a long term vision plan?	Yes
1c. Is the desired transit service programmed in a cost feasible plan?	No
2. Does the existing transit service frequency meet the standards as specified in the Florida TOD Guidebook (see pages 2-6 to 2-9)?	
Select the existing Transit Type serving the station area	Local or Express Bus
Enter the Peak Hour Service Frequency (in minutes)	*11* minutes
3. Does the existing transit station include supporting infrastructure, such as bicycle parking, pedestrian access, a shelter, and seating?	Yes
4. Is the station area currently served by more than 1 mode of transit?	No

Block Size (Readiness Measure 13 of 20)

Block size is measured as average block length. Block size can be calculated through a simple GIS exercise with a shapefile of the complete street network, including all local streets, county streets, and state roadways.

Enter the average block length (in feet) for the station area as computed in GIS. *360* feet

Data Requirements: Roadway shapefile(s) for all roadways within the station area

Method: The GIS analyst explodes the street network within the station area (an automated process that splits segment lengths at intersections) and computes the average segment length between intersections.

Path Connectivity (Readiness Measure 14 of 20)

The Path Connectivity measure requires a simple visual assessment of an aerial image (e.g. Google Earth) to determine whether any large barriers disrupt the street network, how frequently connections across the barrier are provided, and whether significant portions of the street network are disconnected.

Barriers to path connectivity may include highways, large arterials, waterways, railways, excessively long blocks, and other large scale infrastructure that disconnects the street network. To determine whether these features are barriers to connectivity, think critically about their scale and length, and how they are integrated into the surrounding urban form. This measure requires subjective judgment. Answer as best you can, and think about ways to improve connectivity over these barriers after you have completed the assessment.

Please select the descriptions that best characterize the street network within the study area.
Data Requirements: Aerial Imagery of station area.
Google Maps
Google Earth

1. Block Layout

Grid

Grid: A small-scale street pattern where local, public streets typically cross at four-way intersections with few or no dead ends. For the purpose of this tool, a grid does not have to contain a majority of perpendicular streets.

Superblock: Consists of a few, widely spaced arterial streets connecting to form a large block. Side streets may penetrate into the large block, but are typically private and are dead ends.

2. Barriers (see description above for more guidance on how to answer)

Major barrier(s) with several connections

Dixie Highway is major barrier with 5 crossings in the station area. 152nd street is also a major barrier. Moderatly connected street grid.

3. Street Connections

Few disconnected streets

Once a pedestrian reaches the east side of Dixie, the neighborhoo is relatively well connected.

Bicycle Comfort (Readiness Measure 15 of 20)

Bicycle comfort can be quantified by calculating the percentage of road centerline miles that have either very slow posted speeds (20 mph or less) or designated bicycle facilities. Please refer to the User Guide for a more detailed explanation of the reasoning for using these criteria.

The most readily available data source for speed limits on all roads, including state and local roads, is Navteq, which classifies roads according to categories of speeds in increments of 10 mph. For the purpose of this assessment, roads with speed limits of 20 mph or less are considered comfortable for bicyclists, as are any roads with a designated bicycle facility (e.g. 4 foot wide or wider bicycle lane or cycle track).

Enter the percentage of road centerline miles with posted speeds of 20 mph or less or with designated bicycle facilities. *7.9* percent

Data Requirements: Roadway network shapefile, Local bicycle facility shapefile, NAVTEQ Streets Data or other shapefile with speed limit data.

The local municipality usually maintains a GIS shapefile of the street network, which may include speed limit data and bicycle facility data. Local or regional agencies, such as MPOs, may also have bicycle facility data available. NAVTEQ data may be available from FDOT. Speed limit information may also be available from a local government or agency, depending on the data they have available.

Method: Compile the necessary data for the station area (half-mile radius surrounding the transit station). Compute the percentage of street centerline mile that have a designated bicycle facility and/or have a posted speed limit of 20 mph or less

---

Community Gathering Places (Readiness Measure 16 of 20)

The Community Gathering Places measure is the percentage of area within the half-mile radius station area that is considered to be parks or open space. This value can be calculated from the county or city tax assessor's GIS parcel shapefile.

Enter the percentage of land within the station area that is considered to be parks or open space.	*25*	percent

Data Requirements: County tax assessor parcel data

Method: Select all the parcels within the station area that have an existing use of park, open space, or similar designation. Compute the total acreage of the selected parcels and then divide the total by 502.65.

Social Measures

Diversity of Existing Uses within Walking Distance (Readiness Measure 17 of 20)

Walk Score (www.walkscore.com) provides a free analysis of the density and diversity of destinations that are within walking distance of a specified point. By simply entering the street address of the center point of the station area, Walk Score will provide a score from 0 to 100 of the surrounding area's walkable nature.

Enter the Walk Score value for the street address of the station area's center point. The link to the Walk Score website is provided below. Walk Score	*73*

Civic or Educational Uses (Readiness Measure 18 of 20)

The Civic or Educational Uses measure requires a qualitative assessment of the presence and size of civic, cultural, and educational facilities. This measure is evaluated through the following series of questions.

1. Is there a local elementary, middle, or high school within the station area?	Yes	Village Pines School
2. Is there at least one of the following within the station area: City Hall, Post Office, or similar government/ civic use?	No	
3. Is there at least one of the following within the station area: Museum, Library, or cultural performance hall of local significance?	Yes	Coral Reef Branch Library
4. Is there at least one of the following within the station area: Museum, Library, or cultural performance hall of regional significance?	No	
5. Is there a college or university within the station area?	No	

Community Events & Branding (Readiness Measure 19 of 20)

The Community Events & Branding measure requires a qualitative assessment based on the following series of questions.

		Palmetto Bay
1. Does the station area have a well-known name or identity (e.g. Arts District)?	No	
2. Are regularly occurring community events hosted within the station area (e.g. weekly farmers market or monthly food/wine walk)?	No	**No, but the private property across from Sontags is used for sales of flowers and other goods from time to time.**
3. Are special community events or festivals hosted within the station area (e.g. arts and crafts festival or Fourth of July celebration)?	No	**No.**
4. Does the station area take advantage of any unique physical or cultural attributes (e.g. culinary district, warehouses, historic architecture)?	No	

Housing & Transportation Affordability (Readiness Measure 20 of 20)

The Center for Neighborhood Technology calculates the percentage of household income that is devoted to housing and transportation costs, and provides this data for free at www.htaindex.org.

Enter the average H+T Affordability Index value for all the block groups within the station area. The link to the H+T Affordability Index website is provided below.

Housing & Transportation Affordability Tool

79

Method: Download the GIS H+T Affordability Index data from the website. Join this data to the station area block group data in GIS. Compute the weighted average value of all block groups within the station area for the "Regional Typical" Household type (ht_ami). For more information on the data, please see CNT's Data Dictionary. The link is provided below.

H+T Affordability Data Dictionary

Real Estate Values
Measure 8 of 20

Data Locations
ACS 2014 Raw Census Data
\\10.0.2.12\OrlData\GIS\Projects\FLdemographic\cenacs_2014
ACS 2014 Clipped Data DBF (Drag and drop file from explorer into Excel)
\\10.0.2.12\OrlData\GIS\Projects\MiamiDade\Avrprjs\SW152_MPO

Area of Block Groups 502.7 acres in station area

GEOID	Area (sft)	Area (acre)	% of Station Area
120860082021	6,444,263	147.94	29%
120860082023	28,218	0.65	0%
120860082063	2,988,252	68.60	14%
120860082081	856,603	19.66	4%
120860082093	75,806	1.74	0%
120860083045	321,955	7.39	1%
120860083051	6,074,655	139.45	28%
120860083061	5,102,077	117.13	23%
Total	**21,891,829**	**502.57**	**1.00**

ACS 2014 Home Value

GEOID	Median Home Value
120860082021	$ 367,500
120860082023	$ 396,600
120860082063	$ 444,700
120860082081	$ 158,800
120860082093	$ 419,800
120860083045	$ 114,000
120860083051	$ 424,300
120860083061	$ 241,700
Average	**$ 320,925**

ACS 2014 Median Gross Rent

GEOID	Median Gross Rent
120860082021	$ 780
120860082023	$ -
120860082063	$ 1,375
120860082081	$ 1,087
120860082093	$ -
120860083045	$ 542
120860083051	$ -
120860083061	$ 979
Average	**$ 595**

Home Values - Weighted Average

GEOID	Weighted Product
120860082021	$ 108,151.82
120860082023	$ 511.07
120860082063	$ 60,685.87
120860082081	$ 6,212.03
120860082093	$ 1,453.28
120860083045	$ 1,676.11
120860083051	$ 117,705.81
120860083061	$ 56,315.36
Weighted Average	**$ 352,711.36**

Median Gross Rent - Weighted Average

GEOID	Weighted Product
120860082021	$ 229.55
120860082023	$ -
120860082063	$ 187.64
120860082081	$ 42.52
120860082093	$ -
120860083045	$ 7.97
120860083051	$ -
120860083061	$ 228.10
Weighted Average	**$ 695.78**

Trends in Income & Educational Attainment Data
Percentage change of per capita income over a 10 year period
Readiness Measure 10 of 20

Trends in Income

2000 - Per Capita Income By Household

STFID	MEDHHINC	AVE_HH_SZ	Median Per Capita Income by Household (Calculated)	Area of Block Group (within Station area)	Weighted Income*Area
120860083041	39909	3.45	$ 11,568	7	80,975
120860082042	44643	3.03	$ 14,734	26	383,075
120860083061	48412	2.85	$ 16,987	108	1,834,560
120860083052	39402	2.44	$ 16,148	136	2,196,177
120860082033	65605	2.95	$ 22,239	153	3,402,564
120860082011	96397	2.92	$ 33,013	72	2,376,912
			$ 19,115	**502**	**10,274,264**

2014 - Per Capita Income by Household

GEOID	Median HH Income (ACS_14_5YR_B19013)	Average HH Size (Calculated [column H]: ACES_14_5YR_B11016_with_ann.csv)	Median Per Capita Income	Area of Block Group (Acres within Station area)	Weighted Income*Area

120860083045	39070	2.17	$	18,005	7	126032
120860082093	132041	2.96	$	44,608	2	89217
120860082023	86250	2.01	$	42,910	1	42910
120860083051	108200	2.87	$	37,700	139	5240348
120860083061	53913	2.87	$	18,785	117	2197847
120860082081	41792	2.78	$	15,033	20	300662
120860082021	46000	1.55	$	29,677	147	4362581
120860082063	113617	2.28	$	49,832	69	3438409
Total			**$**	**42,759**	**502**	**15,798,007**

Percent Change in Weighted Income*Area
54%

Data Locations
Median HH Income (2014) \\10.0.2.12\OrlData\GIS\Projects\FLdemogr
Avg HH Size (2014) \\10.0.2.12\OrlData\GIS\Projects\FLdemogr

Trends in Educational Attainment

2000 - Educational Attainment (% of Block group with a bachelors degree)

STFID	PCT_BACHLR	Area of Block Group (within Station area)	Column1	Weighted Average (Area within Station Area)
120860083041	4.9	7	1%	0.1
120860082042	18.1	26	5%	0.9
120860083061	14.0	108	22%	3.0
120860083052	21.3	136	27%	5.8
120860082033	28.1	153	30%	8.6
120860082011	29.7	72	14%	4.3
Total		**502**	**1**	**22.6**

2014 - Educational Attainment (% of Block group with a bachelors degree)

GEOID	Percent of Bachelors (Bach/Total)	Area of Block Group (Acres within Station area)	Area of Block Group (Percent of total area)	Weighted Average (Area within Station Area)
120860083045	5.2	7	1%	0.1
120860082093	30.3	2	0%	0.1
120860082023	33.3	1	0%	0.1
120860083051	38.8	139	28%	10.7
120860083061	26.6	117	23%	6.2
120860082081	9.4	20	4%	0.4
120860082021	23.7	147	29%	6.9
120860082063	31.3	69	14%	4.3
Total		**502**		**28.8**

Percent Change in Weighted Average
27.4%

Data Locations
Education (2014) \\10.0.2.12\OrlData\GIS\Projects\FLdemogr ACS_14_5YR_B15003_metadata.csv

Which measure is this?

Parcels Per Block **Separated by quadrant (Busway & 152nd)**

NW Quadrant	SW Quadrant	NE Quadrant	SE Quadrant
2	27	8	6
2		8	5
6		8	21
6		8	1
5		8	11
10		8	12
16		10	1
1		10	16
10		9	11
16		9	10
21		33	11
29			6
1			7

11			14
10			26
5			18
2			14
			25
			15
			29
			4
			3
			4
			16
			14
			15
153	**27**	**119**	**315**

Total

Total Blocks	Total Parcels
55	614
Average Parcels per Block	**11.2**

Housing and Transportation Affordability
Percentage of Income dedicated to housing and transportation costs.
Readiness Measure 20 of 20

Trends in Income

GEOID	ht_ami	Area of Block Group (Acres within Station area)	Area of Block Group (Percent of total area)	Weighted Average (Area within Station Area)
120860083045	60	7	1%	1
120860082093	114	2	0%	0
120860082023	105	1	0%	0
120860083051	108	139	28%	30
120860083061	67	117	23%	16
120860082081	59	20	4%	2
120860082021	60	147	29%	18
120860082063	90	69	14%	12
Total		**502**		**79**

Understanding Opportunities for Transit Oriented Development: *An Analysis of Readiness*

What is the TOD Readiness Tool?

Achieving transit oriented development (TOD) around a transit station is an evolutionary process with many factors driving readiness for TOD to take place. The TOD readiness tool:

- Provides planners with a simple assessment of readiness for any area - urban or rural, large or small, with or without existing or proposed transit service (below)
- Helps planners determine strategies to increase readiness in response to the assessment (see back page)

The following 20 measures assess how 'ready' an area is for TOD to happen. The goal is not necessarily to achieve full circles for every measure, but rather to understand the strengths and weaknesses of the area and build upon them. The accompanying User Guide describes how to evaluate each measure. The measures are sensitive to the different station area place types as defined in the Framework for TOD in Florida[1].

LEGEND:

- Conditions in earliest stage of development
- Conditions moving towards TOD
- Conditions supportive of TOD

Station Area

Local Government: *City of Palmetto Bay*

Station Area Name: *152nd Street Busway Station*

Station Area Type: *Neighborhood Center*

Future Transit Type: *Light Rail*

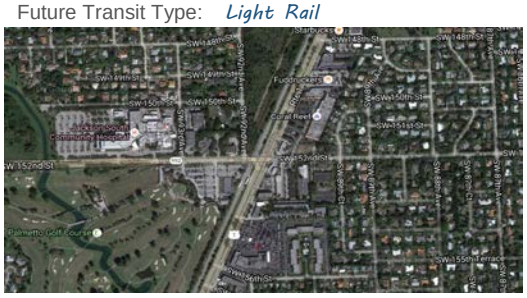

20 MEASURE ASSESSMENT

	EXISTING CONDITIONS	READINESS
POLICY	**Compelling Vision:** A clearly articulated adopted vision of the scale, intensity, character, amenities, and locale of development is a paramount first step towards TOD.	
	Supportive Regulations: Land use and land development regulations that control densities, land use mix, pedestrian-oriented design and parking strategies are the regulatory 'teeth' to implement the vision.	
	Predictable and Consistent Political and Development Context: Cities with a consistent and receptive approach towards development and a predictable timeline for approval and permitting processes are more attractive to developers.	
	Affordable Housing Policies: Policies to maintain a diverse housing stock with workforce housing increases access to transit and ridership potential.	
	Public Investment: Capital program planning, infrastructure investments and related financial incentives ensure adequate capacity for higher density development and demonstrate public sector commitment.	
MARKET	**Recent Development Activity:** Proposed, under construction, and new residential, mixed-use and commercial development indicate developer interest.	
	Redevelopment Potential: The ease with which redevelopment can occur based on underutilized or vacant parcels, land uses, parcel size, and ownership.	
	Real Estate Values: Property values measure market strength and the desire for compact development.	
	Financial Incentives for Development: Mixed-use TOD projects are typically more expensive to construct and may require financial incentives to bridge the gap in a project's pro forma.	
	Trends in Income and Educational Attainment Data: Increases in income and education levels indicate a growing interest in the neighborhood and the potential for capturing choice ridership.	
PHYSICAL	**Transit Travel Shed:** The number of jobs accessible by transit influences how desirable a station area is to potential new businesses or residents.	
	Transit Service and Infrastructure: Areas with existing or funded transit service are more likely to attract development. The type of transit service and the amenities at the station are also influential.	
	Block Size: Smaller block sizes promote pedestrian scaled development and walkability.	
	Path Connectivity: Physical barriers to connectivity inhibit pedestrian and bicyclist access to transit, shopping, jobs, and services.	
	Bicycle Comfort: Accommodating bicyclists can expand transit station catchment areas far beyond the typical pedestrian shed.	
	Community Gathering Places: Parks, public plazas and squares, and other areas of public open space are essential amenities and social catalysts for TOD.	
	Diversity of Existing Uses:	

READINESS ASSESSMENT

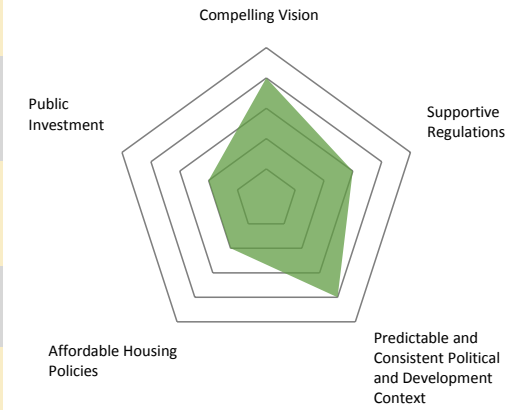

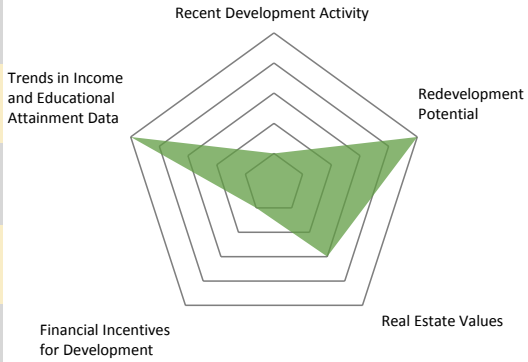

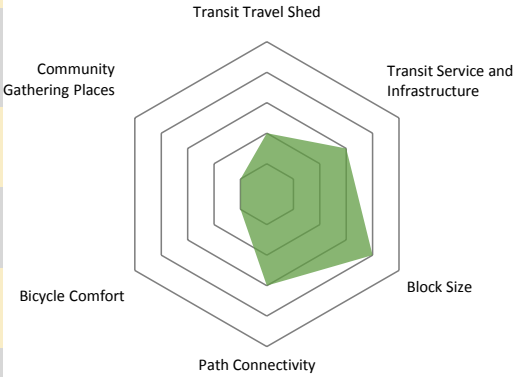

SOCIAL

A measure of whether daily errands can be made by walking as determined by Walk Score.

Civic or Educational Uses:

Civic, cultural and educational institutions can function as anchors for development and as destinations attracting people to the station area.

Community Events and Branding:

Hosting community events can develop an identity for the area, celebrating its unique character and market the area as an attractive place.

Housing and Transportation Affordability:

Affordability of living in a location depends on the combined costs of housing and transportation, and captures the location-efficiency of the area.

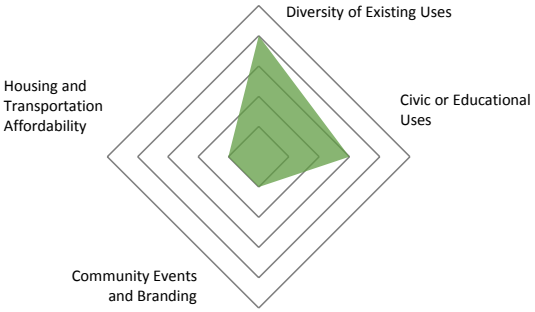

ASSESSMENT

STRENGTHS:

The station area is located along one of Miami-Dade County's SMART Plan Corridors. This station contains a variety of uses and excellent opportunities for redevelopment. The station area is relatively well connected and contains a mix of uses.

WEAKNESSES:

The station contains opportunities for establishing a strong vision and updated policies, creating financial incentives, overcoming the 152nd street and Dixie Highway pedestrian barriers, and improving bicycle safety.

Understanding Opportunities for Transit Oriented Development: *An Analysis of Readiness*

Next Steps: Developing Strategies

Once the assessment is complete, a community can begin to identify strategies to build upon the area's strengths and address weaknesses.

A critical first step to achieving TOD is articulating a clear and compelling vision for the area that can guide the rest of the community's efforts.

Planners should use the assessment to think critically about their strengths and weaknesses and determine the best strategies for their unique community.

The strategies should address specific opportunities to increase a community's readiness for TOD.

Does STATION Have a Compelling Vision?

The 152nd Street Busway Station will be evaluated during SMART Plan planning efforts.

Station Area Vision

A potential development in the 152nd Street station area could have characteristics that can be seen in this image. These characteristics include a pedestrian oriented environment and increased development intensity.

STRATEGIES

POLICY

Policy Strategy 1 The SMART Plan Planning effort should include a clear vision for the station areas and should include a visual component if possible. This will help development partners (elected officials, local government staff, and developers) visualize the desired outcome. Each partner can then use this visulazation in their individual actions (planning, designing, etc.). The City and County can begin pursuing policy changes to emphasize form, massing, setback, and other standards, and increase densities and intensities that are appropriate for the station area's future rail service. The City and County can also begin to invest in the infrastructure needed to support increases in density and intensity.

Policy Strategy 2 Improve affordable housing policies by developing an inclusionary zoning ordinance. This ordinance could include minimum requirements for building affordable housing and incentives for building more than the minimum requirements. In preparation for this ordinance, the City and County could assess affordable housing need in the station area.

MARKET

Market Strategy 1 Conduct a market assessment of the station area to evaluate market gaps.

Market Strategy 2 Create a local incentive program to support the type of development envisioned in the station area. This programs could include land banks, density easements, Flroida Housing Finance Corporation programs, tax credit financing, and impact or development fee credits. This action can spur development activity and support realestate values.

PHYSCIAL

Physical Strategy 1 Develop a strategy to help to pedestrians and bicyclists cross major barriers (152nd street and Dixie Hightway) safely and quickly. Consider reducing the street speed on local streets to 20 mph or less to increase bicycle and pedestrian safety in the station area.

Physical Strategy 2 Establish community gathering places in the station area. This could potentially be accomplished through redevelopment efforts. Currently, a large parking lot surrounds the busway station and provides a development opportunity. The City could consider coordinating with Miami-Dade county to achieve this objective.

SOCIAL

Social Strategy 1 Initiate a branding effort for the station area that helps the station area develop an identity. The City and/or County could support this effort by organizing regularly occuring events in the station area.

Social Strategy 2 Develop policies and programs that support housing and transportaiton affordability.

TAKE AWAY:

The 152nd Street station area is a promising opportunity to create an exceptional TOD. The potential for redevelopment is incredibly strong, educational attainment and incomes are rising, and the station area's land use and transportation bones can support TOD. By developing a stong vision for the station area, and supporting that vision with updated policies and marketing efforts, the City and County can create a foundation for TOD success.

The definitions presented here are based on the Framework for TOD in Florida and the Florida TOD Guidebook.

Framework for TOD in Florida Florida TOD Guidebook

The definitions are listed in alphabetical order. For additional information, please see the Framework for TOD in Florida or the Florida TOD Guidebook

Intermodal Hub

A transit station that connects two or more modes of transportation

Local Bus Hub or Transfer Station

Is considered to be a premium transit station if it serves a minimum of three fixed routes operating with headways of 21-30 minutes or less.

Place Types

A place type refers generally to the characteristics of density, diversity, and design present for a specific geography. For the purpose of this tool, the three place types identified in the Framework for TOD in Florida are used for defining threshold values and scores. These place types reflect the range of transit supportive community development patterns in Florida.

Regional Center

Centers of economic and cultural significance, including downtowns and central business districts, which serve a regional travel market and are served by a rich mix of transit types ranging from high speed, heavy or commuter rail to BRT and local bus service. Regional Centers are larger in size than Community Centers or Neighborhood Centers and tend to contain more than one transit station and multiple bus stops. Small block sizes, more lot coverage, higher intensities and densities of development, civic open spaces, and minimal surface parking result in a highly urban development pattern.

Community Centers

Function as sub-regional or local centers of economic and community activity and include urban and town centers served by one or more transit types. More intense or dense development in Community Centers tends to be concentrated within walking distance of the transit station. The pattern of development ranges from urban to suburban. Block sizes, lot coverage, and development intensities and densities tend to be moderate.

Neighborhood Centers

Are dominated by residential uses and are served by some type of premium transit. Non-residential uses are limited to local-serving retail and services. Residential densities tend to be lower than in Community Centers and at their highest within walking distance of the transit station. Neighborhood Centers are found in older urban areas and newer suburban developments.

Premium Transit Station

A station serving a premium type or types of transit or a station that functions as a local bus hub. Park and ride lots adjacent to a transit station are also included in this definition.

Premium Transit Types

Heavy Rail and Commuter Rail

A rail-based technology consisting of large, high passenger capacity cars and typically realizes operational efficiency through large passenger volumes. These transit types operate along exclusive, dedicated rail right-of-way. The travel shed is regional in nature, spanning many miles, and stations tend to be located farther apart.

Light Rail

A rail-based technology consisting of smaller cars with lower passenger capacity compared to heavy rail and commuter rail. Light rail can operate in dedicated rail or shared right of way. The optimal travel shed is typically less than then commuter rail travel shed.

Modern Streetcar

An electric vehicle based technology that runs on rails typically located in existing rights of way. Modern streetcars typically operate as urban circulators oriented towards shorter trips. Stations are located close together with a heavy emphasis on walk access. Streetcar alignments are often located in shared traffic lanes but can also be located in dedicated rail right-of-way.

Bus Rapid Transit or Local/Express Bus

A rubber wheel-based technology that operates in mixed traffic/shared lanes or in dedicated right-of-way. Operational efficiency is maximized in dedicated right-of-way operation, but transit signal priority and other means can assist travel speeds when operated in mixed traffic.

High-Speed Rail and Express Intercity Passenger Rail

A high passenger volume, high speed service located in dedicated rail right-of-way connecting centers of population and employment located approximately 80 to 500 miles apart. High-speed rail stations tend to located far apart and sited within regional urban centers or at locations serving as major regional intermodal hubs.

Station Area

One-half mile or approximately 500 acres around a transit stations composed of the transit core and transit neighborhood. The benefits of TOD and planning for TOD do not necessarily stop at the one-half mile radius. However, for the purpose of analysis, the one-half mile radius is a well established distance corresponding to the distance people are willing to walk to access premium transit.

About this sheet

This sheet computes the points for each question using the input from the orange and yellow cells in the "Assessment Form" tab. The "Scoring Criteria" column describes the scoring system or references another sheet where a more detailed analysis is performed. Columns labeled "Points" compute the points from the orange cells in the "Assessment Form" tab. Columns labeled "Value" simply transpose the values from the yellow cells in the "Assessment Form" tab. The "Thresholds" sheet uses the data in the "Points" and "Values" columns to compute the readiness score for each measure.

The scoring criteria are described in more detail in the User Guide. It is possible to change the scoring criteria in this sheet if desired.

1. The sheet must first be unlocked. The password is available upon request. To request the password, email TOD@citiesthatwork.com.
2. Any changes made to the criteria in this sheet will require corresponding changes to the "Thresholds" sheet.
3. Revising the criteria requires changing the equations in the cell under the "Points" column for the desired question. These equations include several Excel functions, including "IF", "AVERAGE", and "VLOOKUP."

For more information on the assumptions and thresholds, please see the following:

User Guide

ReadMe tab section on "What if I want to change the assumptions?"

Compelling Vision (Measure 1)		
Question	**Points**	**Scoring Criteria**
1a	1	*1 point if yes*
1b	1	*1 point if yes*
2	1	*1 point if yes*
3	1	*1 point if yes*
4	0	*1 point if yes*
5	1	*1 point if yes*
6a	1	*1 point if yes*
6b	1	*1 point if yes*
6c	0	*1 point if yes*
7	1	*1 point if yes*

Supportive Regulations (Measure 2)		
Question	**Points**	**Scoring Criteria**
1	1	*1 point if yes*
2	1	*1 point if yes*
3	1	*1 point if yes*
4a	0.4	*up to 0.5 points*
4b	0.1	*up to 0.5 points*
4c	0.1	*up to 0.5 points*
4d	0.3	*up to 0.5 points*
4e	0.1	*up to 0.5 points*

4f	0.2	*up to 0.5 points*
4g	0.1	*up to 0.5 points*
4h	0.1	*up to 0.5 points*
4i	0.3	*up to 0.5 points*
5	0	*1 point if yes*
6	0.5	*0.5 points if yes*
7	0	*1 point if yes*

Predictable & Consistent Political & Development Context (Measure 3)

Question	Points	Scoring Criteria
1	3	*up to 5 points*
2	4	*up to 5 points*
3	5	*up to 5 points*
4	0	*up to 5 points*
5	4	*up to 5 points*

Affordable Housing Policies (Measure 4)

Question	Points	Scoring Criteria
1a	0	*0.5 points if yes*
1b	0	*Additional 1.5 points if mandatory*
2	0	*1 point if yes*
3	0	*1 point if yes*
4	1	*1 point if yes*
5a	1	*1 point if yes*
5b	0	*1 point if recommendations implemented*

Public Investment (Measure 5)

Question	Points	Scoring Criteria
1	1	*1 point if yes*
2	0	*0.5 points if yes*
3	0.5	*0.5 points if yes*
4	0	*1.5 points if yes*
5	0	*1.5 points if yes*
6	0	*0.5 points if yes*

Recent Development Activity (Measure 6)

Question	Value	Scoring Criteria
1	0	*See Thresholds Sheet*

Redevelopment Potential (Measure 7)

Question	Points	Scoring Criteria
1	5	*See RedPotential Sheet*
2a	5	*See RedPotential Sheet*
2b	3	*See RedPotential Sheet*
3	4	*See RedPotential Sheet*

Real Estate Values (Measure 8)		
Question	**Points**	**Scoring Criteria**
1	5	*See CensusData Sheet*
2	1	*See CensusData Sheet*

Financial Incentives for Development (Measure 9)		
Question	**Points**	**Scoring Criteria**
1a	0	*1 point if yes*
1b	0	*3 points if no(and remaining questions are not needed)*
2	0	*up to 2 points (1 point for each incentive program)*
3	0	*1 point if yes*

Trends in Income & Educational Attainment Data (Measure 10)		
Question	**Value**	**Scoring Criteria**
1	83.4	*See Thresholds Sheet*

Transit Travel Shed (Measure 11)		
Question	**Value**	**Scoring Criteria**
1	61236	*See Thresholds Sheet*

Transit Service & Infrastructure (Measure 12)		
Question	**Points**	**Scoring Criteria**
1a	0	*3 points if yes*
1b	1	*1 point if yes*
1c	0	*1 point if yes*
2	2	*2 points if criteria are met*
3	1	*up to 1 point*
4	0	*1 point if yes*

Block Size (Measure 13)		
Question	**Value**	**Scoring Criteria**
1	360	*See Thresholds Sheet*

Path Connectivity (Measure 14)		
Question	**Points**	**Scoring Criteria**
1	1	*1 point if Grid Pattern*
2	1	*up to 3 points*
3	1	*up to 2 points*

Bicycle Comfort (Measure 15)		
Question	**Value**	**Scoring Criteria**
1	7.9	*See Thresholds Sheet*

Community Gathering Places (Measure 16)

Question	Value	Scoring Criteria
1	25	*See Thresholds Sheet*

Diversity of Existing Uses within Walking Distance (Measure 17)		
Question	**Value**	**Scoring Criteria**
1	73	*See Thresholds Sheet*

Civic or Educational Uses (Measure 18)		
Question	**Points**	**Scoring Criteria**
1	1	*1 point if yes*
2	0	*1 point if yes*
3	1	*1 point if yes*
4	0	*2 points if yes*
5	0	*2 points if yes*

Community Events & Branding (Measure 19)		
Question	**Points**	**Scoring Criteria**
1	0	*1 point if yes*
2	0	*1 point if yes*
3	0	*1 point if yes*
4	0	*2 points if yes*

Housing & Transportation Affordability (Measure 20)		
Question	**Value**	**Scoring Criteria**
1	79	*See Thresholds Sheet*

About this sheet

This sheet contains the scoring thresholds for each of the measures, which are shown in yellow. For each measure, the "Total Points" column pulls in the sum or average number of points for each measure from the "IndScores" sheet, and compares this value to the scoring threshold values to determine the measure's readiness score.

The thresholds are described in more detail in the User Guide. It is possible to change the thresholds in this sheet if desired.

1. The sheet must first be unlocked. The password is available upon request. To request the password, email TOD@citiesthatwork.com.
2. Changes made to the criteria in this sheet may require corresponding changes to the "IndScores" sheet.
3. There are a number of ways to revise the thresholds. The Threshold values in the yellow cells may be adjusted by substituting in a desired value in place of an existing value. The scoring criteria and thresholds can be further customized by changing the equations in the cells under the "Total Points" and/or "Measure Score" column for the desired measure. These equations include several Excel functions, including "IF", "AVERAGE", and "VLOOKUP."

For more information on the assumptions and thresholds, please see the following:
User Guide
ReadMe tab section on "What if I want to change the assumptions?"

Calculation	Denotes cells that include a calculation
Threshold	Denotes cells that include threshold values

		Scoring Thresholds										
		1		2		3		4		5		
Measure	**Total Points**	from	to	from	to	from	to	from	to	from	to	**Measure Score**
Compelling Vision	8	0	2	3	4	5	6	7	8	9	10	4
Supportive Regulations	5.2	0	1.9	2	3.9	4	5.9	6	7.9	8	10	3
Predictable & Consistent Political & Development Context	16	0	5	6	10	11	15	16	20	21	25	4
Affordable Housing Policies	2	0	1	1.5	2.5	3	4	4	5.5	6	7	2
Public Investment	1.5	0	1	1.5	2	2.5	3.5	4	4.5	5	5.5	2
POLICY MEASURE												3
Recent Development Activity	0		0		1		2		4	5		1
Redevelopment Potential	4.333333333		1		2		3		4	5		5
Real Estate Values	3		1		2		3		4	5		3
Financial Incentives for Development	0		0		1		2		3	4		1
Trends in Income & Educational Attainment Data	83.4		0	0	10		20		40	40		5
MARKET MEASURE												3
Transit Travel Shed	61236		50,000		100,000		200,000		300,000	300,001		2
Transit Service & Infrastructure	4	0	1	1.5	2.5	3	4.5	5	5.5	6		3
Block Size	360		1000		500		400		350	350		4
Path Connectivity	3		0		2		3		4		6	3
Bicycle Comfort	7.9		25		50		75		90		100	1
Community Gathering Places	25		1		2		3.5		5	5	8.5	1
		16		12.5		10.5		8.5				LEAVE BLANK
PHYSICAL MEASURE												2.333333333
Diversity of Existing Uses within Walking Distance	73	0	24	25	49	50	69	70	89	90	100	4
Civic or Educational Uses	2		0		1		2		3		4	3
Community Events & Branding	0		0		1		2		3		4	1
Housing & Transportation Affordability	79	65		60		50		45			45	1
SOCIAL MEASURE												2.25

Notes on columns: *values from "IndScores" sheet* *Scoring thresholds based on the descriptions in the User Guide* *Scores based on comparison of TOTAL POINTS to THRESHOLD VALUES*

About this sheet

This sheet contains the scoring threshold for the redevelopment potential measure. The "IndScores" sheet references these values when computing the score for each of the attribute/questions that assess this measure. For more information on these thresholds, see the TOD Readiness Tool User Guide.

The scoring criteria are described in more detail in the User Guide. It is possible to change the scoring criteria in this sheet if desired.

1. The sheet must first be unlocked. The password is available upon request. To request the password, email TOD@citiesthatwork.com.
2. Changes made to the criteria in this sheet may require corresponding changes to the "Thresholds" sheet.
3. Revising the criteria requires changing values in the yellow cells.

For more information on the assumptions and thresholds, please see the following:
User Guide
ReadMe tab section on "What if I want to change the assumptions?"

Thresholds for Redevelopment Potential

Vacant and Underutilized Parcels

Score	1	2	3	4	5
Percent	10	20	30	40	

Parcel Ownership

Score	1	2	3	4	5
owners	2.4	2.1	1.8	1.6	

Parcel Size

Score	1	2	3	4	5
parcels	15	12	8	5	

Single Family Land Use

Score	1	2	3	4	5
percent	90	75	40	25	

About this sheet

This sheet incorporates US Census Data to inform the thresholds for the "Real Estate Values" measure.

The scoring criteria are described in more detail in the User Guide. It is possible to change the scoring criteria in this sheet if desired.

1. The sheet must first be unlocked. The password is available upon request. To request the password, email TOD@citiesthatwork.com.
2. Changes made to the criteria in this sheet may require corresponding changes to the "Thresholds" sheet.
3. Revising the criteria requires changing values in the yellow cells.

For more information on the assumptions and thresholds, please see the following:

User Guide

ReadMe tab section on "What if I want to change the assumptions?"

1	2	3	4	5	6	7	8	9	10	11	12	13	14
												Rent Value Thresholds	
					Home Value Thresholds (% of median value)						(% of median value)		
County	MSA	Median Home Value	Median Gross Rent		75%	90%	110%	125%		75%	90%	110%	125%
Lee	Cape Coral-Fort Myers	$149,400	$943		$112,050.00	$134,460.00	$164,340.00	$186,750.00		$707.25	$848.70	$1,037.30	$1,178.75
Okaloosa	Crestview-Fort Walton Beach-Destin	$177,400	$995		$133,050.00	$159,660.00	$195,140.00	$221,750.00		$746.25	$895.50	$1,094.50	$1,243.75
Walton					$133,050.00	$159,660.00	$195,140.00	$221,750.00		$746.25	$895.50	$1,094.50	$1,243.75
Gilchrist	Gainesville	$163,300	$884		$122,475.00	$146,970.00	$179,630.00	$204,125.00		$663.00	$795.60	$972.40	$1,105.00
Alachua					$122,475.00	$146,970.00	$179,630.00	$204,125.00		$663.00	$795.60	$972.40	$1,105.00
Citrus	Homosassa Springs	$117,400	$790		$88,050.00	$105,660.00	$129,140.00	$146,750.00		$592.50	$711.00	$869.00	$987.50
Clay	Jacksonville	$163,600	$955		$122,700.00	$147,240.00	$179,960.00	$204,500.00		$716.25	$859.50	$1,050.50	$1,193.75
Duval					$122,700.00	$147,240.00	$179,960.00	$204,500.00		$716.25	$859.50	$1,050.50	$1,193.75
Baker					$122,700.00	$147,240.00	$179,960.00	$204,500.00		$716.25	$859.50	$1,050.50	$1,193.75
St. Johns					$122,700.00	$147,240.00	$179,960.00	$204,500.00		$716.25	$859.50	$1,050.50	$1,193.75
Nassau					$122,700.00	$147,240.00	$179,960.00	$204,500.00		$716.25	$859.50	$1,050.50	$1,193.75
Polk	Lakeland-Winter Haven	$111,400	$862		$83,550.00	$100,260.00	$122,540.00	$139,250.00		$646.50	$775.80	$948.20	$1,077.50
Broward	Miami-Fort Lauderdale-West Palm Beach	$194,300	$1,126		$145,725.00	$174,870.00	$213,730.00	$242,875.00		$844.50	$1,013.40	$1,238.60	$1,407.50
Miami-Dade					$145,725.00	$174,870.00	$213,730.00	$242,875.00		$844.50	$1,013.40	$1,238.60	$1,407.50
Palm Beach					$145,725.00	$174,870.00	$213,730.00	$242,875.00		$844.50	$1,013.40	$1,238.60	$1,407.50
Collier	Naples-Immokalee-Marco Island	$261,300	$1,020		$195,975.00	$235,170.00	$287,430.00	$326,625.00		$765.00	$918.00	$1,122.00	$1,275.00
Manatee	North Port-Bradenton-Sarasota	$170,900	$972		$128,175.00	$153,810.00	$187,990.00	$213,625.00		$729.00	$874.80	$1,069.20	$1,215.00
Sarasota					$128,175.00	$153,810.00	$187,990.00	$213,625.00		$729.00	$874.80	$1,069.20	$1,215.00
Marion	Ocala	$119,400	$822		$89,550.00	$107,460.00	$131,340.00	$149,250.00		$616.50	$739.80	$904.20	$1,027.50
Lake	Orlando-Kissimmee-Sanford	$161,800	$1,019		$121,350.00	$145,620.00	$177,980.00	$202,250.00		$764.25	$917.10	$1,120.90	$1,273.75
Orange					$121,350.00	$145,620.00	$177,980.00	$202,250.00		$764.25	$917.10	$1,120.90	$1,273.75
Osceola					$121,350.00	$145,620.00	$177,980.00	$202,250.00		$764.25	$917.10	$1,120.90	$1,273.75
Seminole					$121,350.00	$145,620.00	$177,980.00	$202,250.00		$764.25	$917.10	$1,120.90	$1,273.75
Brevard	Palm Bay-Melbourne-Titusville	$144,900	$899		$108,675.00	$130,410.00	$159,390.00	$181,125.00		$674.25	$809.10	$988.90	$1,123.75
Gulf	Panama City	$155,800	$925		$116,850.00	$140,220.00	$171,380.00	$194,750.00		$693.75	$832.50	$1,017.50	$1,156.25
Bay					$116,850.00	$140,220.00	$171,380.00	$194,750.00		$693.75	$832.50	$1,017.50	$1,156.25
Charlotte	Punta Gorda	$143,700	$912		$107,775.00	$129,330.00	$158,070.00	$179,625.00		$684.00	$820.80	$1,003.20	$1,140.00
Indian River	Sebastian-Vero Beach	$157,400	$854		$118,050.00	$141,660.00	$173,140.00	$196,750.00		$640.50	$768.60	$939.40	$1,067.50
Highlands	Sebring	$93,600	$719		$70,200.00	$84,240.00	$102,960.00	$117,000.00		$539.25	$647.10	$790.90	$898.75
Jefferson	Tallahassee	$167,000	$899		$125,250.00	$150,300.00	$183,700.00	$208,750.00		$674.25	$809.10	$988.90	$1,123.75
Gadsden					$125,250.00	$150,300.00	$183,700.00	$208,750.00		$674.25	$809.10	$988.90	$1,123.75
Leon					$125,250.00	$150,300.00	$183,700.00	$208,750.00		$674.25	$809.10	$988.90	$1,123.75
Wakulla					$125,250.00	$150,300.00	$183,700.00	$208,750.00		$674.25	$809.10	$988.90	$1,123.75
Hernando	Tampa-St. Petersburg-Clearwater	$146,500	$943		$109,875.00	$131,850.00	$161,150.00	$183,125.00		$707.25	$848.70	$1,037.30	$1,178.75
Hillsborough					$109,875.00	$131,850.00	$161,150.00	$183,125.00		$707.25	$848.70	$1,037.30	$1,178.75
Pasco					$109,875.00	$131,850.00	$161,150.00	$183,125.00		$707.25	$848.70	$1,037.30	$1,178.75
Pinellas					$109,875.00	$131,850.00	$161,150.00	$183,125.00		$707.25	$848.70	$1,037.30	$1,178.75
Sumter	The Villages	$194,100	$827		$145,575.00	$174,690.00	$213,510.00	$242,625.00		$620.25	$744.30	$909.70	$1,033.75

Source: U.S. Census Bureau, 2009-2013 5-Year American Community Survey (Metropolitan Statistical Area Geography)

About this sheet

This sheet contains the recommended service frequencies for each transit type as outlined in the Framework for TOD in Florida. The maximum values for peak hour frequencies (shown in yellow) are used as the threshold values for scoring question 2 of the Transit Service & Infrastructure measure.
The scoring criteria are described in more detail in the User Guide. It is possible to change the scoring criteria in this sheet if desired.

1. The sheet must first be unlocked. The password is available upon request. To request the password, email TOD@citiesthatwork.com.
2. Changes made to the criteria in this sheet may require corresponding changes to the "Thresholds" sheet.
3. Revising the criteria requires changing values in the yellow cells.

For more information on the assumptions and thresholds, please see the following:
User Guide
ReadMe tab section on "What if I want to change the assumptions?"

		Service Frequency Standards (min)	
Existing Transit Type	**Values from Florida TOD Guidebook**	**Minimum**	**Maximum (Threshold Values)**
Express and Inter-City Passenger Rail	60 minutes (peak express), up to 12 daily (inter-city)	0	60
Heavy Rail	5-10 minutes (peak)	5	10
Commuter Rail	20-30 minutes (peak)	20	30
Light Rail	5-30 minutes	5	30
Modern Streetcar	8-15 minutes	8	15
Bus Rapid Transit (BRT)	8-20 minutes	8	20
Local or Express Bus	21-30 minutes (maximum) with no fewer than three fixed routes	21	30

About this sheet

These lists populate the drop down lists in the "Assessment Form" sheet

Each list is defined with a name. The name is the bold, underlined text over each list.

Transit Types	**Counties**	**Place Type**	**YesNo**	**ZeroToFive**	**OneToS**	**VolMan**	**FinancialIncentives**	**PlannedProgrammed**	**BlockLayout**	**Barriers**	**Connections**	**Example**
Heavy Rail	Alachua	Regional Center	Yes	0	1	Voluntary	0	Yes	Super Block	Major barrier(s) with one or no connections	Many disconnected streets	*Example Orange Input Box*
Commuter Rail	Baker	Community Center	No	1	2	Mandatory	1	No	Grid	Major barrier(s) with several connections	Few disconnected streets	
Light Rail	Bay	Neighborhood Center		2	3		2	No, but Planned & Programmed		Major barrier(s), but well integrated and connected	No disconnected streets	
Modern Streetcar	Brevard			3	4		3 or more			No major barriers		
Bus Rapid Transit (BRT)	Broward			4	5							
Local or Express Bus	Charlotte			5								
Express and Inter-City Passenger Rail	Citrus											
	Clay											
	Collier											
	Duval											
	Gadsden											
	Gilchrist											
	Gulf											
	Hernando											
	Highlands											
	Hillsborough											
	Indian River											
	Jefferson											
	Lake											
	Lee											
	Leon											
	Manatee											
	Marion											
	Miami-Dade											
	Nassau											
	Okaloosa											
	Orange											
	Osceola											
	Palm Beach											
	Pasco											
	Pinellas											
	Polk											
	Sarasota											
	Seminole											
	St. Johns											
	Sumter											
	Wakulla											
	Walton											