Miami Dade County
Public Works Department

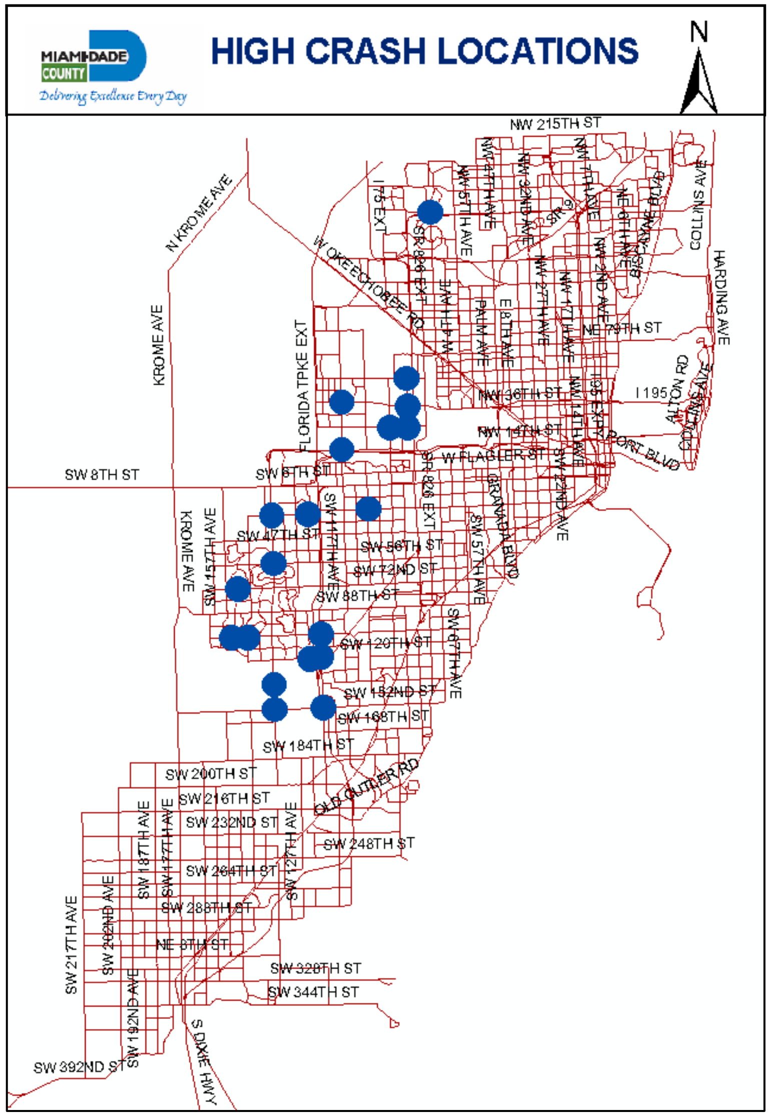

SAFETY STUDIES AT HIGH CRASH LOCATIONS COUNTYWIDE

Traffic Engineering Division

February 2011

TABLE OF CONTENTS

EXECUTIVE SUMMARY ii

1. INTRODUCTION 1

2. METHODOLOGY 1

3. STUDY LOCATIONS 9

3.1. SW 117 Avenue and SW 152 Street 9
3.2. SW 122 Avenue and SW 120 Street 17
3.3. SW 137 Avenue and SW 26 Street (Coral Way) 24
3.4. SW 117 Avenue and SW 104 Street 31
3.5. SW 137 Avenue and SW 152 Street 38
3.6. NW 107 Avenue and NW 12 Street 45
3.7. SW 152 Avenue and SW 72 Street 52
3.8. NW 79 Avenue and NW 36 Street 59
3.9. SW 137 Avenue and SW 56 Street 66
3.10. NW 79 Avenue and NW 25 Street 73
3.11. NW 67 Avenue and NW 169 Street 80
3.12. SW 147 Avenue and SW 104 Street 88
3.13. Hammocks Boulevard and SW 104 Street 95
3.14. NW 87 Avenue and NW 25 Street 102
3.15. SW 117 Avenue and SW 120 Street 109
3.16. SW 137 Avenue and SW 136 Street 116
3.17. SW 97 Avenue and SW 24 Street 123
3.18. SW 122 Avenue and SW 26 Street (Coral Way) 130
3.19. NW 79 Avenue and NW 58 Street 137
3.20. NW 107 Avenue and NW 41 Street 145

APPENDICES

Appendix A – Crash Details, Summaries, Charts, and Collision Diagrams
Appendix B – Traffic Counts
Appendix C – Signal Timing
Appendix D – Capacity/LOS Analysis

EXECUTIVE SUMMARY

The Public Works Department (PWD) at Miami Dade County (MDC) undertook this traffic safety study based on a contract with the Metropolitan Planning Organization (MPO) and the Florida Department of Transportation (FDOT). The objective of this study is to identify traffic safety concerns and to recommend countermeasures to improve the operational safety of twenty (20) high-crash locations countywide. The following tasks have been performed to achieve the objective:

1. Acquiring and Processing of Data
2. Identifying High Crash Locations
3. Conducting Field Studies
4. Intersection Safety Assessment
5. Countermeasures and Potential Improvements
6. Preparation and Submission of Final Report

After conducting the safety analysis, the 20 locations as identified in the study are ranked in the following table:

Loc. No.	Address	COM. Dist.	RIF Dist.	Local Jurisdiction	Crashes Frequency		Safety Ratio		Crash Severity(EPDO)		Composite Rank (R1+R2+R3)	FINAL RANK
					Value	Rank (R1)	Value	Rank (R2)	Value	Rank (R3)		
12	SW 117 AVE / SW 152 ST	9	5	Unincorp	78	1	3.278	1	1.345	6	8	**1**
14	SW 122 AVE / SW 120 ST	8,9	5	Unincorp	47	7	2.714	2	1.380	4	13	**2**
15	SW 137 AVE / SW 26 ST (Coral Way)	11	4	Unincorp	53	4	1.965	7	1.225	9	20	**3**
10	SW 117 AVE / SW 104 ST	8	5	Unincorpo	63	2	1.853	9	1.205	11	22	**4**
18	SW 137 AVE / SW 152 ST	9,11	5	Unincorp	60	3	1.861	8	1.182	13	24	**5**
6	NW 107 AVE / NW 12 ST	12	1	Doral/Unincorp	52	5	1.656	11	1.191	12	28	**6**
20	SW 152 AVE / SW 72 ST	11	5	Unincorp	30	16	2.112	6	1.333	7	29	**7**
3	NW 79 AVE / NW 36 ST	12	1	Doral	51	6	2.302	5	1.118	18	29	**8**
16	SW 137 AVE / SW 56 ST	10,11	5	Unincorp	45	9	1.418	16	1.370	5	30	**9**
2	NW 79 AVE / NW 25 ST	12	1	Doral	41	10	2.490	3	1.122	17	30	**10**
1	NW 67 AVE / NW 169 ST	13	3	Unincorp	47	7	1.587	14	1.214	10	31	**11**
19	SW 147 AVE / SW 104 ST	11	5	Unincorp	27	17	1.574	15	1.556	1	33	**12**
8	S. Hammocks Blvd. / SW 104 ST	11	5	Unincorp	21	20	1.591	13	1.524	2	35	**13**
5	NW 87 AVE / NW 25 ST	12	1	Doral	41	10	1.777	10	1.148	15	35	**14**
11	SW 117 AVE / SW 120 ST	8	5	Unincorp	34	13	2.437	4	1.088	20	37	**15**
17	SW 137 AVE / SW 136 ST	9,11	5	Unincorp	38	12	1.599	12	1.132	16	40	**16**
9	SW 97 AVE / SW 24 ST	10	1	Unincorp	22	19	1.174	19	1.448	3	41	**17**
13	SW 122 AVE / SW 26 ST (Coral Way)	10,11	4	Unincorp	26	18	1.395	17	1.308	8	43	**18**
4	NW 79 AVE / NW 58 ST	12	1	Doral/Unincorp	33	14	1.140	20	1.170	14	48	**19**
7	NW 107 AVE / NW 41 ST	12	1	Doral	32	15	1.197	18	1.094	19	52	**20**

Based on the safety concerns found during the development of this report, the field investigation, the collected traffic data and the traffic analysis performed, the following is a summary of the intersections safety/operational analysis and recommendations.

Summary of the Intersections Safety/Operational Analysis and Recommendations

Rank	Location	Signal ID	Com. Dist.	RIF Dist.	Local Jurisdiction	Abnormal Crash Types	Probable Causes	Recommended Countermeasures
1	**SW 117 AVE / SW 152 ST**	4764	9	5	Unincorp.	- Rear End - Left Turn - Sideswipe	- Large turning volumes - Inadequate signal timing - Restricted sight distance - Inadequate channelization - Inadequate signing	• Realignment of the WBLT lane to reduce the offset . • Provide turning guidelines for the WBLT lane. • Closing median opening on the east leg, and lengthen the WBLT lane. • Converting the SB shared thru-right lane to a thru only lane.
2	**SW 122 AVE / SW 120 ST**	4867	8, 9	5	Unincorp.	- Angle - Left Turn - Sideswipe - Fixed Object	- Large turning volumes - Inadequate signal timing - Restricted sight distance - Excessive vehicle speed - Poor pavement/markings conditions	• Lengthen the WBLT lane to approximately 500 ft. • Installing "No Turn on Red" (R10-11) signs for NB approach. • Modifying the fences on the SE and SW corners to improve the sight distance triangles for NB approach.
3	**SW 137 AVE / SW 26 ST (Coral Way)**	5003	11	4	Unincorp.	- Left Turn - Sideswipe - Right Turn - Rear End	- Large turning volumes - Restricted sight distance - Inadequate road design - Poor pavement/markings conditions - Presence/Location of Driveways	• Provide WBRT lane (relocate lighting poles) • Reduce the offset between NB/SB & EB/WB LT lanes • Channelizing NB and EB right-turn lanes at the approach. • Closing the median openings on the north and west legs
4	**SW 117 AVE / SW 104 ST**	4216	8	5	Unincorp.	- Rear End - Sideswipe - Fixed Object	- Large turning volumes - Excessive vehicle speed - Inadequate roadway lighting - Poor pavement/markings conditions	• Increase storage length for EBLT to approximately 350 ft. • Replace the painted median on north leg with raised one • Installing lane control (R3-8) signs for all approaches. • Relocation of the stop bars to standard distances from crosswalks
5	**SW 137 AVE / SW 152 ST**	4637	9, 11	5	Unincorp.	- Rear End - Right Turn - Sideswipe	- Presence/Location of Driveways - Heavy Traffic and Heavy Vehicles - Inadequate signal timing - Poor pavement/markings conditions	• Lengthen the WB double LT lanes to 475 ft each. • Lengthen the SB double LT lanes to 300 ft each. • Channelizing the WB and SB RT lanes for free flow operations. • Extend the merge lane on the west leg receiving lanes
6	**NW 107 AVE / NW 12 ST**	4592	12	1	Doral/Unincorp.	- Rear End - Sideswipe	- Large turning volumes - Inadequate channelization - Inadequate signal timing - Poor pavement/markings conditions	• Lengthen the NB double LT lanes to 250 ft each. • Lengthen the EB double LT lanes to 300 ft each. • Installing lane control (R3-8) signs for all approaches. • Installing additional post mounted No U-Turn (R3-4) signs for all approaches.
7	**SW 152 AVE / SW 72 ST**	4982	11	5	Unincorp.	- Left Turn - Right Turn - Sideswipe	- Large turning volumes - Inadequate channelization - Restricted sight distance - Poor pavement/markings conditions	• Realignment of the EB/WB LT lanes to reduce the offset. • Closing the median opening on west leg, and lengthen the EBLT lane to 200 ft. Also, provide a WBLT bay at the second median opening. • Lengthen the WBLT lane to approximately 400 ft. • Lengthen the NBLT lane to approximately 200 ft. • Improve the turn radius at the NE and SE corners. • Installing "No U-Turn" (R3-4) signs for EB/WB approaches.
8	**NW 79 AVE / NW 36 ST**	3954	12	1	Doral	- Rear End - Sideswipe - Right Turn	- Inadequate signal timing - Large turning volumes - Inadequate channelization - Inadequate signing	• Add one through lane to the EB approach by converting the striped gore to a full lane. • Installing advance guide signs for SR-826 for EB, NB and SB. • Relocate the NB stop bar closer to the intersection.
9	**SW 137 AVE / SW 56 ST**	4595	10, 11	5	Unincorp.	- Rear End - Left Turn - Right Turn - Sideswipe	- Presence/Location of Driveways - Large turning volumes - Restricted sight distance - Inadequate signing	• Add one LT lane to the NB approach. • Reduce the offset between EB and WB LT lanes. • Convert the full median opening at south leg to a directional median opening. • Relocate the bus stop on NB approach away from the intersection.
10	**NW 79 AVE / NW 25 ST**	5111	12	1	Doral	- Left Turn - Sideswipe	- Large turning volumes - Presence/Location of Driveways - Restricted sight distance - Poor pavement/markings conditions	• Lengthen the EBLT lane to approximately 350 ft. • Closing the median opening east and west of the intersection . • Installing lane use (R3-8) signs for SB approach.
11	**NW 67 AVE / NW 169 ST**	3901	13	3	Unincorp.	- Rear End - Left Turn - Right Turn - Sideswipe	- Restricted sight distance - Poor visibilty of signal - Large turning volumes - Inadequate road design - Poor pavement/markings conditions	• Lengthen the SBLT lane to approximately 450 ft. • Lengthen the EB and WB LT lanes to approximately 300 ft each. • Reducing the offset between NB and SB left turn lanes. • Smoothing the curve return radii for the WBRT traffic. • Extending the distance between the intersection and the add/drop lane tapers along the north leg. • Installing Signal Ahead signs for EB and WB approaches. • Installing warning signs for add/dropp lanes (W4-2) along the north leg.
12	**SW 147 AVE / SW 104 ST**	5021	11	5	Unincorp.	- Left Turn - Fixed Object	- Large turning volumes - Inadequate roadway lighting - Obstruction is close to roadway - Restricted sight distance	• Lengthen the NB, SB and EB LT lanes to approximately 300 ft each. • Lengthen the WBLT lane to approximately 200 ft. • Reducing the offset between left turn lanes. • Providing crosswalks, pedestrian features at all legs.

Summary of the Intersections Safety/Operational Analysis and Recommendations

Rank	Location	Signal ID	Com. Dist.	RIF Dist.	Local Jurisdiction	Abnormal Crash Types	Probable Causes	Recommended Countermeasures
13	**S. Hammocks Blvd / SW 104 ST**	5265	11	5	Unincorp.	- Left Turn - Fixed Object	- Large turning volumes - Restricted sight distance - Inadequate roadway lighting - Excessive speed	• Lengthen the EBLT lane to approximately 300 ft and closing the median opening. • Lengthen the WBLT lane to approximately 450 ft. • Reducing the offset between EB/WB LT lanes. • Modifying the median noses for north/south legs to provide clear pedestrian paths. • Installing curve warning (W1-2R) and signal ahead (W3-3) signs for northbound approach.
14	**NW 87 AVE / NW 25 ST**	4333	12	1	Doral	- Right Turn - Sideswipe	- Large turning volumes - Presence/Location of Driveways - Inadequate channelization - Inadequate signing	• Lengthen the NBLT lane to approximately 450 ft. • Improving the EB approach lane alignment at the start of the taper. • Modifying the SBRT radius to better accommodate heavy vehicles. • Installing lane use signs (R3-8) for all approaches.
15	**SW 117 AVE / SW 120 ST**	4866	8	5	Unincorp.	- Rear End - Angle - Left Turn - Sideswipe - Right Turn Fixed Object	- Large turning volumes - Inadequate signal timing - Inadequate channelization - Inadequate signing - Excessive speed - Poor pavement/markings conditions	• Lengthen the EBLT lanes to approximately 600 ft each. • Installing lane use signs (R3-8) for all approaches. • Modifying the channelization of the eastbound right-turns. • Provide/repair the pedestrian features including ADA approved pedestrian ramps.
16	**SW 137 AVE / SW 136 ST**	4825	9, 11	5	Unincorp.	- Rear End - Left Turn - Sideswipe	- Large turning volumes - Inadequate signal timing - Inadequate channelization - Poor pavement/markings conditions	• Lengthen the WBLT lane to 300 ft and provide raised median. • Reduce the offset between NB and SB LT lanes. • Add pedestrian crosswalks, ADA approved pedestrian ramps and signal heads at east and south legs.
17	**SW 97 AVE / SW 24 ST**	3341	10	1	Unincorp.	- Fixed Object	- Inadequate roadway lighting - Excessive speed - Obstruction is close to roadway	• Lengthen the WBLT lane to approximately 500 ft. • Lengthen the SBLT lane to approximately 350 ft. • Increase the walk time for pedestrians crossing SW 24 Street. • Install lane end and merge signs (W9-2L & W4-2) on north leg NB.
18	**SW 122 AVE / SW 26 ST (Coral Way)**	4564	10, 11	4	Unincorp.	- Left Turn - Fixed Object	- Inadequate signal timing - Inadequate roadway lighting - Restricted sight distance - Large turning volumes - Excessive vehicle speed	• Lengthen the WBLT lane to approximately 350 ft. • Lengthen the SBLT lane to approximately 500 ft. • Reduce the offset between EB and WB left turn lanes. • Installing curve warning signs (W1-2) for both EB and WB approaches and "Signal Ahead" signs (W3-3) for WB approach. • Install lane end and merge signs (W9-2L & W4-2) on south leg SB. • Provide pedestrian signal heads to cross the north and west legs.
19	**NW 79 AVE / NW 58 ST**	4176	12	1	Doral/Unincorp.	- Right Turn - Sideswipe	- Large turning volumes - Restricted sight distance - Presence/Location of Driveways - Inadequate roadway design - Inadequate channelization	• Convert the EBRT lane to be a shared through and right-turn. • Add a third receiving lane to the EB movement. • Install turn warning and signal ahead signs (W1-1 & W3-3) at SB. • Improve turning radius for both EB and WB RT.
20	**NW 107 AVE / NW 41 ST**	4887	12	1	Doral	- Sideswipe - Backing	- Large turning volumes - Inadequate signal timing - Inadequate roadway design - Presence/Location of Driveways - Inadequate channelization	• Changing the lane configuration of the SB approach. *This improvement will require additional right-of-way*. • Changing the lane configuration of the NB approach . • Changing the current half quad north/south split phase to a full quad. • Lengthen the EBLT lane to approximately 400 ft. • Lengthen the WB outside LT lane to approximately 500 ft. • Lengthen the proposed SBLT lanes to approximately 350 ft each. • Closing of the median opening in the north leg.

1. INTRODUCTION

The Public Works Department (PWD) at Miami Dade County (MDC) undertook this traffic safety study based on a contract with the Metropolitan Planning Organization (MPO) and the Florida Department of Transportation (FDOT). The objective of this study is to identify traffic safety concerns and to recommend countermeasures to improve the operational safety of twenty (20) high-crash locations countywide. The top 20 crash locations countywide were identified for the study period from 2006 through 2008. A list of the 20 locations and their associated jurisdictions is presented in *Table 1*.

PWD has evaluated the crash data for the years 2006 through 2008, in which a review of the hard copy police reports was performed, and collision diagrams were prepared. Furthermore, a comprehensive traffic safety analysis was performed for all locations in order to identify the abnormal crash patterns. In addition, field reviews were conducted within the project limits. In some cases, Synchro/Simtraffic simulation was performed. As such, traffic data was also collected at these intersections. Based on these criteria, findings, and conclusions recommendations are presented. The improvements have been developed and sketched to clearly identify the modifications required. Finally, these efforts have been documented and presented in a report format. *Figure 1* presents the study intersection locations.

This report follows the procedures outlined in the Manual on Uniform Traffic Studies (MUTS), the Highway Capacity Manual – 2000 Update (HCM2000), the Manual of Uniform Traffic Control Devices (MUTCD), and the National Highway Institute (NHI) Safety Analysis guidelines. The report evaluates the following for each intersection:

- Site Description
- Safety Conditions and Analysis
- Traffic Operation Conditions and Analysis
- Recommendations
- Conceptual plan

2. METHODOLOGY

In order to determine high crash locations it is necessary to look at crash data collected throughout the county. First, a list of locations of 15 or more crashes per year during the last three years (2006, 2007 and 2008) was obtained from Miami Dade Police Department (MDPD), System Development Bureau. This data needed to be filtered and arranged so we can identify the highest 20 crash locations.

Once the candidate locations were determined, we performed review of the hard copy police reports, and prepared collision diagrams for the 20 locations. They were categorized by as many of the following features as possible: time of day, traffic control, alcohol involvement, weather conditions, etc. Additionally, 24-hour traffic volumes, turning movement volumes and signal timing data were collected for all locations. Also, field visits and evaluations were conducted for all locations.

Table 1 – Study Locations

(In alphabetical order)

Loc. #	Address	Commission District	RIF District	Jurisdiction
1	NW 67 Ave. / NW 169 St.	13	3	Unincorporated
2	NW 79 Ave. / NW 25 St.	12	1	Doral
3	NW 79 Ave. / NW 36 St.	12	1	Doral
4	NW 79 Ave. / NW 58 St.	12	1	Doral/Unincorporated
5	NW 87 Ave. / NW 25 St.	12	1	Doral
6	NW 107 Ave. / NW 12 St.	12	1	Doral/Unincorporated
7	NW 107 Ave. / NW 41 St.	12	1	Doral
8	S. Hammocks Blvd. / SW 104 St.	11	5	Unincorporated
9	SW 97 Ave. / SW 24 St.	10	1	Unincorporated
10	SW 117 Ave. / SW 104 St.	8	5	Unincorporated
11	SW 117 Ave. / SW 120 St.	8	5	Unincorporated
12	SW 117 Ave. / SW 152 St.	9	5	Unincorporated
13	SW 122 Ave. / SW 26 St. (Coral Way)	10,11	4	Unincorporated
14	SW 122 Ave. / SW 120 St.	8,9	5	Unincorporated
15	SW 137 Ave. / SW 26 St. (Coral Way)	11	4	Unincorporated
16	SW 137 Ave. / SW 56 St.	10,11	5	Unincorporated
17	SW 137 Ave. / SW 136 St.	9,11	5	Unincorporated
18	SW 137 Ave. / SW 152 St.	9,11	5	Unincorporated
19	SW 147 Ave. / SW 104 St.	11	5	Unincorporated
20	SW 152 Ave. / SW 72 St.	11	5	Unincorporated

** Data obtained from Miami Dade Police Department (MDPD), System Development Bureau*

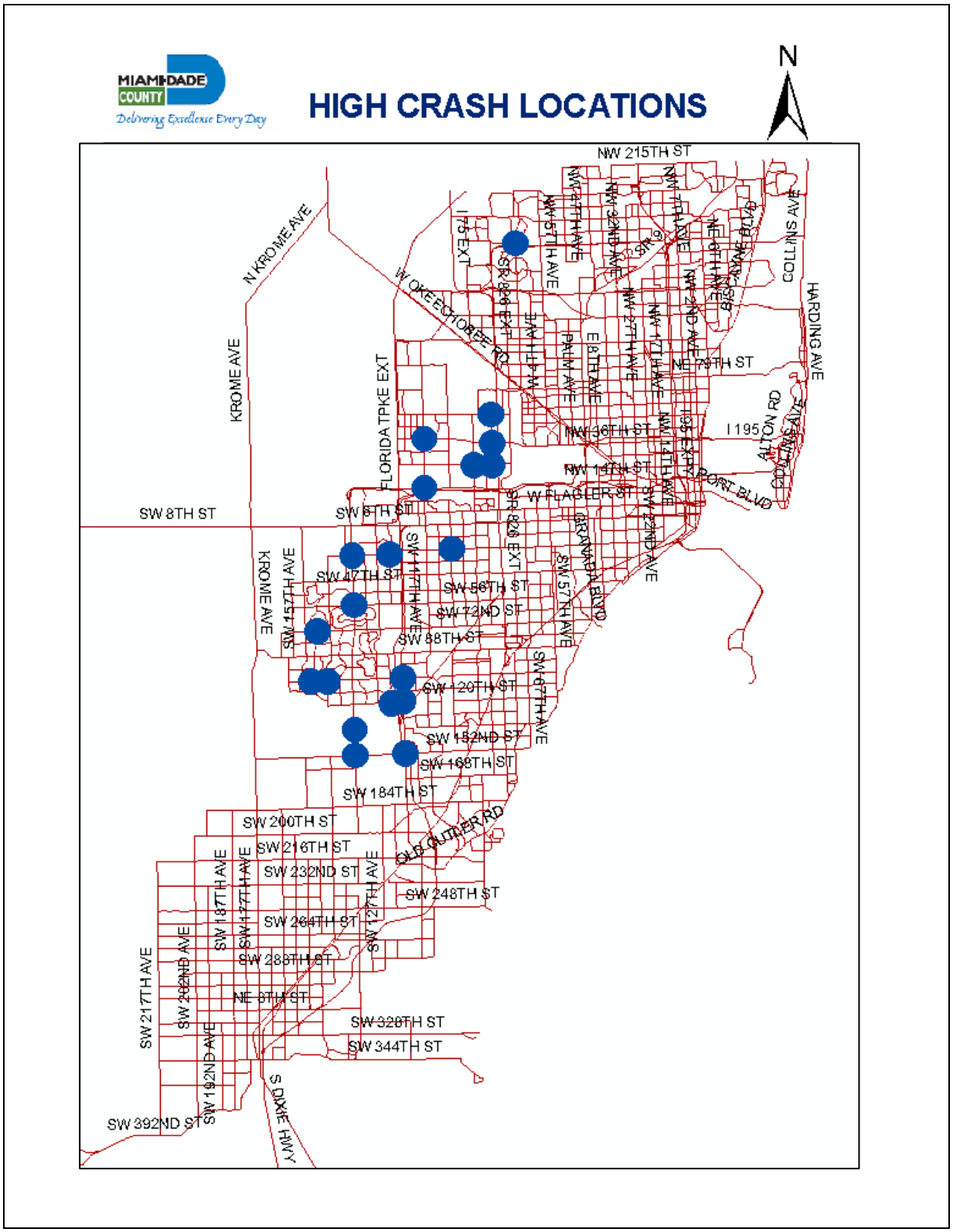

Figure 1: Study Locations Map

A three-phased ranking scheme is used as the basis to determine the high crash locations. Intersections were then ranked by the total number of crashes (Crash Frequency), crash rate (Safety Ratio), and crash severity index (Equivalent Property Damage Only – EPDO) methods. Finally, these intersections were ranked by a combination of these factors. The summary of the 20 high crash locations safety analysis is shown in *Table 2*.

2.1. Number of Crashes/Crash Frequency Method

In this method, we rank locations by the number (or frequency) of average annual relevant crashes for the three year study period. The location with the highest number of crashes ranks as number 1, the location with the next highest number of crashes ranks as number 2 and so on.

2.2. Crash Rate/Safety Ratio Method

The Crash Rate Method compares the number of crashes to the volume of traffic, with the later measured as the number of vehicles entering a spot in a given time period. The steps involved in this method are as follows.

1. Determine the location's actual crash rate. The actual spot crash rate is found as annual average number of crashes during the study period divided by the average daily traffic volume (AADT) during the study period in crashes per million vehicles.

$$\boxed{Actual\ Crash\ Rate\ (RMEV) = \frac{Number\ of\ Crashes}{AADT} \times \frac{1{,}000{,}000}{365}}$$

2. Find the critical crash rate for similar spot locations throughout the state

$$\boxed{Critical\ Crash\ Rate = Avg.StateCrashRate + \frac{0.5}{TrafficBase} + 1.96\sqrt{\frac{Avg.StateCrashRate}{TrafficBase}}}$$

Where:

$$\boxed{Traffic\ Base = \frac{Years * AADT * 365}{1{,}000{,}000}}$$

3. Calculate the safety ratio by dividing the actual crash rate by the critical crash rate.

$$\boxed{Safety\ Ratio = \frac{\text{Actual Crash Rate}}{\text{Critical Crash Rate}}}$$

4. Rank locations by the safety ratio. The location with the highest safety ratio ranks as 1, the location with the next highest safety ratio ranks as 2 and so on.

Using the crash rate method in comparing the crash experience between different time periods or between locations provides a basis for more accurate and meaningful conclusions since it accounts for the numbers of vehicles "exposed" to the hazards of driving within a given time period. It also prevents the potentially misleading classification of a relatively safe high-volume location as "high-crash" simply because it has experienced a relatively large number of crashes. However, it tends to unfairly identify low-volume locations having relatively few crashes as high-crash locations.

2.3. Crash Severity Index/Equivalent Property Damage Only (EPDO) Method

Each site is ranked according to the financial loss from the crashes. This is determined by using values based on the injuries sustained in each crash type as found in the data provided. The crash severity index is calculated by the following formula based on the values obtained from FDOT:

$$\textit{Crash Severity Index} = \frac{(12 \times FatalCrashCount) + (4 \times InjuryCrashCount) + (\mathrm{Pr}\,opertyDamageOnlyCrashCount)}{(TotalCrashCount)}$$

Then the location with the highest cost ranks as 1, the location with the next highest cost ranks as 2 and so on.

2.4. Composite Ranking

Each intersection was given a score based on its ranking of the crash frequency, safety ratio, and EPDO. For example, the intersection with the highest number of crashes was given a score of 1; the intersection with the next highest number of crashes was given a score of 2 and so on. The same scoring procedure was done with safety ratio and EPDO for each intersection. The sum of these individual scores represented the intersection's composite score. Accordingly, the highest rank (1) is given to the location with the lowest combined score and so on. In case of a tie, each location gets the same rank and the following ranking is skipped. *Table 3* provides complete details of the ranking methodology.

Table 2 – Summary of Safety Analysis

Loc. #	Address	Crashes Frequency															AADT	FL Avg. Crash Rate- *3 year Avg.* (*)	Traffic Base	Actual Crash Rate (*)	Critical Crash Rate (*)	Safety Ratio	Crash Severity & EPDO
		2006			2007			2008			Total 3 Years (2006 to 2008)			Average Annual (2006 to 2008)									
		Tota			Tota			Tota															
		PDO	Inju	Fata	PDO	Inju	Fata	PDO	Inju	Fata	PDO	Injury	Fatal	PDO	Injury	Fatal							
1	NW 67 AVE / NW 169 ST	43			53			44			140			47			75921	0.571	27.711	1.684	1.061	1.587	1.214
		41	2	0	49	4	0	40	4	0	130	10	0	43	3	0							
2	NW 79 AVE / NW 25 ST	37			48			38			123			41			47551	0.413	17.356	2.362	0.949	2.490	1.122
		36	1	0	45	3	0	37	1	0	118	5	0	39	2	0							
3	NW 79 AVE / SW 36 ST	47			48			57			152			51			51505	0.571	18.799	2.695	1.171	2.302	1.118
		45	2	0	45	3	0	56	1	0	146	6	0	49	2	0							
4	NW 79 AVE / NW 58 ST	25			42			33			100			33			89979	0.478	32.842	1.015	0.890	1.140	1.170
		23	1	1	42	0	0	32	1	0	97	2	1	32	1	0							
5	NW 87 AVE / NW 25 ST	34			41			47			122			41			54310	0.571	19.823	2.051	1.155	1.777	1.148
		34	0	0	40	1	0	42	5	0	116	6	0	39	2	0							
6	NW 107 AVE / NW 12 ST	48			66			43			157			52			83399	0.571	30.441	1.719	1.038	1.656	1.191
		47	1	0	61	5	0	39	4	0	147	10	0	49	3	0							
7	NW 107 AVE / NW 41 ST	29			31			36			96			32			66884	0.571	24.413	1.311	1.095	1.197	1.094
		28	1	0	30	1	0	35	1	0	93	3	0	31	1	0							
8	S. HAMMOCKS BLVD / SW 104 ST	24			21			18			63			21			34505	0.413	12.594	1.667	1.048	1.591	1.524
		19	5	0	17	4	0	16	2	0	52	11	0	17	4	0							
9	SW 97 AVE / SW 24 ST	17			22			28			67			22			58246	0.413	21.260	1.050	0.895	1.174	1.448
		16	1	0	17	5	0	24	4	0	57	10	0	19	3	0							
10	SW 117 AVE / SW 104 ST	57			64			69			190			63			92365	0.571	33.713	1.879	1.014	1.853	1.205
		53	4	0	60	4	0	64	5	0	177	13	0	59	4	0							
11	SW 117 AVE / SW 120 ST	38			27			37			102			34			59961	0.258	21.886	1.554	0.637	2.437	1.088
		36	2	0	27	0	0	36	1	0	99	3	0	33	1	0							
12	SW 117 AVE / SW 152 ST	83			73			79			235			78			79662	0.413	29.077	2.694	0.822	3.278	1.345
		77	6	0	65	8	0	66	13	0	208	27	0	69	9	0							
13	SW 122 AVE / SW 26 ST	23			31			24			78			26			56641	0.413	20.674	1.258	0.902	1.395	1.308
		22	1	0	27	4	0	21	3	0	70	8	0	23	3	0							
14	SW 122 AVE / SW 120 ST	35			65			42			142			47			51582	0.413	18.827	2.514	0.926	2.714	1.380
		31	4	0	57	8	0	36	6	0	124	18	0	41	6	0							
15	SW 137 AVE / SW 26 ST	49			64			47			160			53			68289	0.571	24.925	2.140	1.089	1.965	1.225
		45	4	0	63	1	0	40	7	0	148	12	0	49	4	0							
16	SW 137 AVE / SW 56 ST	40			41			54			135			45			83872	0.571	30.613	1.470	1.037	1.418	1.370
		34	6	0	35	5	1	52	2	0	121	13	1	40	4	0							
17	SW 137 AVE / SW 136 ST	32			39			43			114			38			57131	0.571	20.853	1.822	1.139	1.599	1.132
		30	2	0	38	1	0	41	2	0	109	5	0	36	2	0							
18	SW 137 AVE / SW 152 ST	65			56			60			181			60			86251	0.571	31.482	1.916	1.030	1.861	1.182
		63	2	0	53	3	0	54	6	0	170	11	0	57	4	0							
19	SW 147 AVE / SW 104 ST	28			21			32			81			27			50384	0.413	18.390	1.468	0.933	1.574	1.556
		22	6	0	19	2	0	25	7	0	66	15	0	22	5	0							
20	SW 152 AVE / SW 72 ST	34			32			24			90			30			38424	0.413	14.025	2.139	1.013	2.112	1.333
		30	4	0	27	5	0	23	1	0	80	10	0	27	3	0							

Table 3 – Ranking of Locations

Loc. No.	Address	COM. Dist.	RIF Dist.	Local Jurisdiction	Crashes Frequency		Safety Ratio		Crash Severity(EPDO)		Composite Rank (R1+R2+R3)	FINAL RANK
					Value	Rank (R1)	Value	Rank (R2)	Value	Rank (R3)		
12	SW 117 AVE / SW 152 ST	9	5	Unincorp	78	1	3.278	1	1.345	6	8	**1**
14	SW 122 AVE / SW 120 ST	8,9	5	Unincorp	47	7	2.714	2	1.380	4	13	**2**
15	SW 137 AVE / SW 26 ST (Coral Way)	11	4	Unincorp	53	4	1.965	7	1.225	9	20	**3**
10	SW 117 AVE / SW 104 ST	8	5	Unincorpo	63	2	1.853	9	1.205	11	22	**4**
18	SW 137 AVE / SW 152 ST	9,11	5	Unincorp	60	3	1.861	8	1.182	13	24	**5**
6	NW 107 AVE / NW 12 ST	12	1	Doral/Unincorp	52	5	1.656	11	1.191	12	28	**6**
20	SW 152 AVE / SW 72 ST	11	5	Unincorp	30	16	2.112	6	1.333	7	29	**7**
3	NW 79 AVE / NW 36 ST	12	1	Doral	51	6	2.302	5	1.118	18	29	**8**
16	SW 137 AVE / SW 56 ST	10,11	5	Unincorp	45	9	1.418	16	1.370	5	30	**9**
2	NW 79 AVE / NW 25 ST	12	1	Doral	41	10	2.490	3	1.122	17	30	**10**
1	NW 67 AVE / NW 169 ST	13	3	Unincorp	47	7	1.587	14	1.214	10	31	**11**
19	SW 147 AVE / SW 104 ST	11	5	Unincorp	27	17	1.574	15	1.556	1	33	**12**
8	S. Hammocks Blvd. / SW 104 ST	11	5	Unincorp	21	20	1.591	13	1.524	2	35	**13**
5	NW 87 AVE / NW 25 ST	12	1	Doral	41	10	1.777	10	1.148	15	35	**14**
11	SW 117 AVE / SW 120 ST	8	5	Unincorp	34	13	2.437	4	1.088	20	37	**15**
17	SW 137 AVE / SW 136 ST	9,11	5	Unincorp	38	12	1.599	12	1.132	16	40	**16**
9	SW 97 AVE / SW 24 ST	10	1	Unincorp	22	19	1.174	19	1.448	3	41	**17**
13	SW 122 AVE / SW 26 ST (Coral Way)	10,11	4	Unincorp	26	18	1.395	17	1.308	8	43	**18**
4	NW 79 AVE / NW 58 ST	12	1	Doral/Unincorp	33	14	1.140	20	1.170	14	48	**19**
7	NW 107 AVE / NW 41 ST	12	1	Doral	32	15	1.197	18	1.094	19	52	**20**

2.5. Possible Crash Causes and Probable Countermeasures

In this section, a description of possible cause(s) for each type of crash along with suggested countermeasure(s) is provided in *Table 4*.

Table 4 – General Crash Causes and Countermeasures

Collision Type	Possible Causes	Probable Countermeasures
Rear End	(1) Large number of turning vehicles (2) Slippery surface (3) Poor visibility of signal (4) Inadequate signal timing (5) Lack of signal coordination (6) Inadequate roadway lighting (7) Crossing pedestrians (8) Presence/Location of driveways	1. Prohibit turns 2. Improve turn storage capacity 3. Reduce speed limits 4. Install or improve signs 5. Improve pavement conditions 6. Improve signal timing/coordination 7. Improve pedestrian crossing 8. Improve driveway design/location
Angle	(9) Restricted sight distance (10) Excessive speed on approach (11) Inadequate advanced warning (12) Large total intersection volume In addition to #(3), #(4), #(6) and #(8)	9. Improve sight distance 10. Adjust amber phase 11. Install all red clearance phase 12. Improve roadway lighting In addition to #3, #4, #6 and #8
Left Turn	(13) Large volume of left-turns (14) Too short amber phase (15) Absence of left-turning phase In addition to #(4), #(6), #(8), #(9) and #(10)	13. Provide/lengthen/add modify turn lanes 14. Provide protected phase if justified 15. Provide turning guidelines for multiple turn lanes 16. Reduce the offset between opposing left turn lanes 17. Install or improve warning signs In addition to #6, #9, #11 and #12
Sideswipe	(16) Inadequate roadway design (17) Excessive vehicle Speed (18) Inadequate pavement markings (19) Inadequate channelization (20) Inadequate signing (21) Improper road maintenance In addition to #(8)	18. Provide wider lanes 19. Improve pavement markings 20. Improve alignment and grade 21. Install/improve channelization 22. Install direction/warning signs In addition to #3 and #4
Pedestrian with Vehicle	(22) Inadequate protection for pedestrians (23) Inadequate Signals (24) Inadequate Phasing Signal In addition to #(6), #(9), #(17) and #(18)	23. Provide/improve sidewalks 24. Provide improve crosswalks 25. Provide pedestrian signal 26. Improve pedestrian phase 27. Provide raised median as refuge In addition to #3, #4 and #11
Fixed Object	(25) Obstruction in/too close to roadway In addition to #(2), #(6), #(11), #(16), #(17), #(18), and #(20)	28. Remove/relocate fixed object In addition to #3, #5, #12, #17, #18, #19 and #20

3. STUDY LOCATIONS

This section provides a crash analysis at each of the study intersections. Furthermore, this section includes field observation reports for each of the study intersections. The field observation reports are used to verify if field conditions such as signal operation, pavement markings, geometry of the intersection or any other existing condition supports the probable cause developed through the study.

3.1. SW 117 Avenue and SW 152 Street

3.1.1. Site Description

This intersection is a signalized four legged intersection located in the unincorporated area of southwest Miami Dade County. SW 117 Avenue is a four lane urban arterial divided by a raised median that runs north-south, and SW 152 Street (Coral Reef Drive) is a four lane urban arterial divided by a raised median that runs east-west.

3.1.2. Safety Conditions and Analysis

The intersection of SW 117 Avenue and SW 152 Street is ranked number 1 in our high crash locations list. A review of the hard copy police reports for the years 2006 through 2008 was performed. During the three-year analysis period, 235 relevant crashes occurred at the intersection. The analysis indicated that the average number of crashes per year is 78. The crash summaries, crash statistics and collision diagrams for the intersection are documented in *Appendix A*.

Based on the analysis of crash records for this intersection, the predominant types of crashes are shown in *Figure 2*.

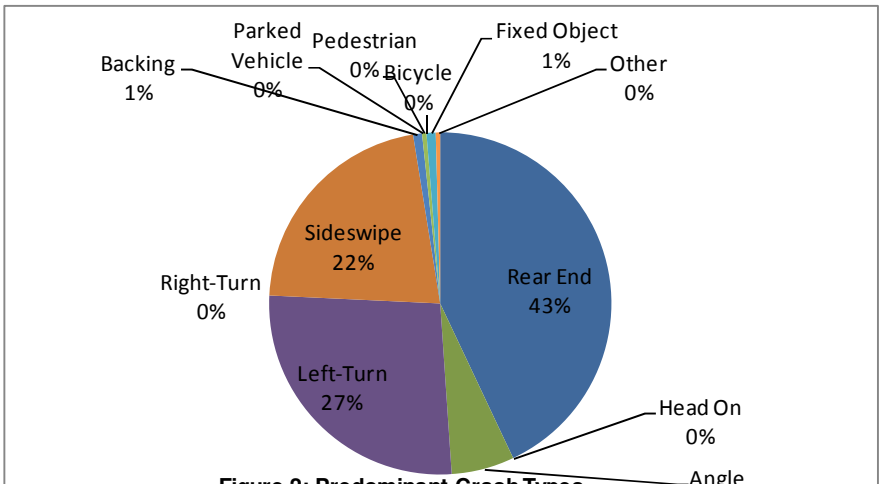

Figure 2: Predominant Crash Types SW 117 AVE & SW 152 ST

Calculated intersection mean crash per year were compared to the average Miami-Dade Crash Rate for County corridors to assess the safety conditions at the study intersection in relation to other roadways with similar traffic and geometric characteristics. This study is based on the 2007 FDOT's "Expected Value Analysis." *Table 5* illustrates the expected accident volume analysis of this intersection as well as the safety ratios and the confidence levels during the analysis period.

Table 5 – Crash Analysis – SW 117 Avenue and SW 152 Street

SW 117 Avenue & SW 152 Street

(4 Lane x 4 Lane, Signalized, With Turn Lanes, 4 Leg Intersection -Table 28) - URBAN Spot

	TYPE OF CRASH	NUMBER OF CRASHES YEAR 2006	2007	2008	3 YEAR TOTAL CRASHE	% of Total	MEAN Accidents per Year	EXPECTED ANNUAL CRASH VALUE MEAN	90th Percentile	95th Percentile	ABNORMALLY HIGH CRASHES Mean	90th Percentil	95th Percentil
COLLISION TYPE	Rear End	36	36	29	101	21%	33.67	5.70	16.96	19.12	X	X	X
	Head On	0	0	0	0	0%	0.00	0.33	1.02	1.15			
	Angle	7	5	2	14	2%	4.67	3.05	7.08	7.85	X		
	Left Turn	15	20	28	63	11%	21.00	1.67	4.02	4.47	X	X	X
	Right Turn	0	0	0	0	0%	0.00	0.33	1.25	1.42			
	Sideswipe	22	11	18	51	7%	17.00	1.60	4.64	5.22	X	X	X
	Backed Into	2	0	0	2	0%	0.67	0.17	0.56	0.63	X	X	X
	Coll. w/ Parked Car	0	0	0	0	0%	0.00	0.10	0.51	0.59			
	Coll. w/ Pedestrian	0	0	1	1	0%	0.33	0.28	1.04	1.19	X		
	Coll. w/ Bicycle	0	0	0	0	0%	0.00	0.09	0.33	0.38			
	Fixed Object	1	0	1	2	0%	0.67	0.03	0.21	0.24	X	X	X
	Ran Off Road	0	0	0	0	0%	0.00	0.00	0.00	0.00			
	Overtuned	0	0	0	0	0%	0.00	0.03	0.21	0.24			
	Other	0	1	0	1	0%	0.33	3.70	8.83	9.82			
	Total Crashes	83	73	79	235	23%	78.33	17.77	40.96	45.39	X	X	X
SEVERITY	PDO crashes	77	65	66	208	89%	69.33	9.93	22.30	24.67	X	X	X
	Fatal crashes	0	0	0	0	0%	0.00	0.05	0.26	0.29			
	Injury crashes	6	8	13	27	11%	9.00	13.14	33.08	36.90			
LIGHT CONDITIONS	Day Light	60	48	59	167	71%	55.67	12.40	29.18	32.39	X	X	X
	Dusk	4	1	0	5	2%	1.67	0.28	0.87	0.98	X	X	X
	Dawn	0	3	2	5	2%	1.67	0.17	0.56	0.63	X	X	X
	Dark	19	20	18	57	24%	19.00	4.56	10.53	11.68	X	X	X
	Unknown	0	1	0	1	0%	0.33	0.35	1.05	1.18			
SURFACE CONDITIONS	Dry	62	68	75	205	87%	68.33	15.30	34.45	38.12	X	X	X
	Wet	5	4	4	13	6%	4.33	2.10	6.02	6.76	X		
	Others	16	1	0	17	7%	5.67	0.37	1.10	1.24	X	X	X
MONTH OF A YEAR	January	1	6	3	10	4%	3.33	1.42	3.33	3.69	X	X	
	February	8	9	9	26	11%	8.67	1.42	3.53	3.93	X	X	X
	March	10	14	8	32	14%	10.67	1.67	4.12	4.59	X	X	X
	April	8	4	7	19	8%	6.33	1.30	3.21	3.57	X	X	X
	May	7	6	7	20	9%	6.67	1.74	4.46	4.99	X	X	X
	June	6	5	8	19	8%	6.33	1.38	3.49	3.90	X	X	X
	July	9	7	5	21	9%	7.00	1.35	3.22	3.58	X	X	X
	August	9	7	7	23	10%	7.67	1.56	3.99	4.46	X	X	X
	September	7	6	7	20	9%	6.67	1.46	3.73	4.16	X	X	X
	October	9	2	6	17	7%	5.67	1.47	3.59	4.00	X	X	X
	November	4	4	8	16	7%	5.33	1.39	3.53	3.94	X	X	X
	December	5	3	4	12	5%	4.00	1.61	4.43	4.97	X		
DAY OF THE WEEK	Sunday	14	15	9	38	16%	12.67	2.70	6.42	7.13	X	X	X
	Monday	6	6	10	22	9%	7.33	2.49	6.18	6.88	X	X	X
	Tuesday	18	10	10	38	16%	12.67	2.56	5.84	6.47	X	X	X
	Wednesday	8	10	13	31	13%	10.33	2.88	7.20	8.03	X	X	X
	Thursday	10	14	12	36	15%	12.00	3.07	7.50	8.35	X	X	X
	Friday	14	8	14	36	15%	12.00	2.61	6.40	7.13	X	X	X
	Saturday	13	10	11	34	14%	11.33	1.46	3.47	3.85	X	X	X
HOUR OF THE DAY	00:00-06:00	7	5	2	14	6%	4.67	1.70	3.39	3.71	X	X	X
	06:00-09:00	8	6	10	24	10%	8.00	1.98	5.12	5.72	X	X	X
	09:00-11:00	9	6	10	25	11%	8.33	1.72	4.23	4.71	X	X	X
	11:00-13:00	14	7	10	31	13%	10.33	2.40	6.30	7.05	X	X	X
	13:00-15:00	7	7	12	26	11%	8.67	1.95	5.32	5.96	X	X	X
	15:00-18:00	20	19	12	51	22%	17.00	3.58	7.81	8.62	X	X	X
	18:00-24:00	18	23	23	64	27%	21.33	4.42	10.63	11.82	X	X	X

	YEAR 1	2	3	3-Year Average
Average Daily Traffic ADT *(Vehicles per Day)*	78,058	79,651	81,277	79,662
Florida Average Crash rate *(Crashes per Million Entering Vehicles)*	0.420	0.424	0.394	0.413
Traffic Base	28.491	29.073	29.666	29.077
Actual Crash Rate *(Crashes per Million Entering Vehicles)*	2.913	2.511	2.663	2.696
Critical Crash Rate *(Crashes per Million Entering Vehicles)*	0.837	0.839	0.790	0.822
Safety Ratio	**3.480**	**2.995**	**3.371**	**3.282**
High Crash Location??	***YES***	***YES***	***YES***	***YES***

$$Actual\ \ Crash\ \ Rate = \frac{A \times 1{,}000{,}000}{V}$$

Where:
A = Total number of crashes or number of crashes by type occurring in a 1 year period.
V = Average Annual Daily Traffic X 365

$$CriticalCrashRate = AVR + \frac{0.5}{TB} + TF\sqrt{\frac{AVR}{TB}}$$

Where:
AVR = Average Statewide Crash Rate for a particular type of intersection or roadway segment.
TB = Traffic Base
TF = Test Factor (z-value)
= 1.96 (assume 95% Confidence Level for RURAL areas)
= 3.29 (assume 99.95% Confidence Level for URBAN areas)

$$Traffic\ Base = \frac{Years \times ADT \times 365}{1{,}000{,}000}$$

$$Safety\ \ Ratio = \frac{Actual\ \ Crash\ \ Rate}{Critical\ \ Crash\ \ Rate}$$

Confidence Level (%)	Constant Z
68.30	1.00
86.60	1.50
90.00	1.64
95.00	1.96
95.50	2.00
98.80	2.50
99.00	2.58
99.70	3.00
99.95	3.29

Table 6 – Abnormal Crash Details & Countermeasures SW 117 Avenue and SW 152 Street

SW 117 Avenue & SW 152 Street

(4 Lane x 4 Lane, Signalized, With Turn Lanes, 4 Leg Intersection -Table 28) - URBAN Spot

			NUMBER OF CRASHES YEAR 2006	2007	2008	3 YEAR TOTAL CRASHE	% of Total	MEAN Accidents per Year	Possible Cause(s)	Counter-measure(s)
Rear End	Total Rear End Crashes		**36**	**36**	**29**	**101**	**100%**	**33.67**	(1)	2
	Lighting Conditions	Day Light	28	26	25	79	78%	26.33	(4)	4
		Dawn	2	1	0	3	3%	1.00	(8)	5
		Dark	6	9	4	19	19%	6.33		6
	Hours of Day	00:00 - 06:00	2	3	1	6	6%	2.00		8
		06:00 - 09:00	4	3	2	9	9%	3.00		
		09:00 - 11:00	3	3	5	11	11%	3.67		
		11:00 - 13:00	8	5	6	19	19%	6.33		
		13:00 - 15:00	3	4	5	12	12%	4.00		
		15:00 - 18:00	12	11	5	28	28%	9.33		
		18:00 - 24:00	4	7	5	16	16%	5.33		
	Direction	North	6	7	3	16	16%	5.33		
		South	7	5	4	16	16%	5.33		
		East	13	17	15	45	45%	15.00		
		West	10	7	7	24	24%	8.00		
		Unknown	0	0	0	0	0%	0.00		

			NUMBER OF CRASHES YEAR 2006	2007	2008	3 YEAR TOTAL CRASHE	% of Total	MEAN Accidents per Year	Possible Cause(s)	Counter-measure(s)
Left Turn	Total Left Turn Crashes		**15**	**20**	**28**	**63**	**100%**	**21.00**	(4)	9
	Lighting Conditions	Day Light	8	11	14	33	52%	11.00	(9)	13
		Dawn	0	1	1	2	3%	0.67	(13)	15
		Dark	7	8	13	28	44%	9.33		16
	Hours of Day	00:00 - 06:00	1	1	1	3	5%	1.00		
		06:00 - 09:00	2	1	4	7	11%	2.33		
		09:00 - 11:00	1	0	1	2	3%	0.67		
		11:00 - 13:00	1	1	1	3	5%	1.00		
		13:00 - 15:00	1	1	4	6	10%	2.00		
		15:00 - 18:00	1	4	3	8	13%	2.67		
		18:00 - 24:00	8	12	14	34	54%	11.33		
	Direction	NB → WB	2	1	5	8	13%	2.67		
		WB → SB	8	16	18	42	67%	14.00		
		SB → EB	2	1	3	6	10%	2.00		
		EB → NB	3	2	2	7	11%	2.33		
		Unknown	0	0	0	0	0%	0.00		

			NUMBER OF CRASHES YEAR 2006	2007	2008	3 YEAR TOTAL CRASHE	% of Total	MEAN Accidents per Year	Possible Cause(s)	Counter-measure(s)
Sideswipe (Overtake)	Total Sideswipe Crashes		**22**	**11**	**18**	**51**	**100%**	**17.00**	(8)	4
	Lighting Conditions	Day Light	21	9	16	46	90%	15.33	(19)	19
		Dawn	0	2	1	3	6%	1.00	(20)	20
		Dark	1	0	1	2	4%	0.67	(21)	22
	Hours of Day	00:00 - 06:00	0	0	0	0	0%	0.00		
		06:00 - 09:00	2	1	4	7	14%	2.33		
		09:00 - 11:00	4	2	2	8	16%	2.67		
		11:00 - 13:00	4	1	4	9	18%	3.00		
		13:00 - 15:00	4	1	2	7	14%	2.33		
		15:00 - 18:00	4	3	3	10	20%	3.33		
		18:00 - 24:00	4	3	3	10	20%	3.33		
	Direction	North	3	4	2	9	18%	3.00		
		South	5	1	4	10	20%	3.33		
		East	12	3	7	22	43%	7.33		
		West	2	3	5	10	20%	3.33		
		Unknown	0	0	0	0	0%	0.00		

Based on a regression growth of 2% from the 2006 entering volume, the calculated safety ratios for the years 2006, 2007, and 2008 were 3.480, 2.995, and 3.371, respectively. The safety ratio for the three years averaged 3.282. Also, results of confidence level indicated that this intersection has been a high crash location during the three years with a confidence level higher than 99.95%.

From this analysis it was determined that rear end, left-turn, sideswipe and fixed object collisions presented abnormal crash patterns that exceed the threshold limits for the 95th percentile and 90th percentile confidence level. Those results indicate that these types of collisions were abnormally high during the period of 2006 through 2008. A detailed review of the abnormal crashes as well as probable countermeasures is presented in *Table 6*.

3.1.3. Traffic Operation Conditions and Analysis

In order to identify the traffic operation characteristics and safety relevant conflicts, field observations at SW 117 Avenue and SW 152 Street were performed on a typical weekday on November 11, 2010. A summary of the traffic data is presented in *Figure 3*, and field review is presented in *Figure 4*.

Capacity analysis was conducted for AM and PM traffic peak hours to evaluate existing conditions as well as improvements. *Table 7* depicts the analysis performed using Synchro 6.0. An assessment of Level of Services (LOS) analysis for peak periods indicated that this intersection is operating at LOS D during both AM and PM peaks. In addition, these analyses indicated that the northbound movement is operating under substantial delay that generates failing conditions (LOS E & F) during the AM and PM peak hours. Also, the analyses concluded that in addition to the northbound, the eastbound is under failing condition (LOS E) during the AM peak.

The results of the improvement and signal retiming/optimization yielded benefits for both AM and PM periods. This was achieved by increasing the northbound/southbound split and modifying the left/through overlaps. Although the overall LOS remained at D during AM and PM peaks, the overall and the approaches delays were improved with minor degradation to the southbound/westbound approaches.

Table 7 – Capacity Analysis – SW 117 Avenue and SW 152 Street

			EB			WB				NB				SB				Overall
			L	TR	App	L	T	R	App	L	T	R	App	L	T	R	App	
AM	Exist.	LOS	F	C	E	D	E	B	D	F	E	C	E	D	D	A	C	**D**
		Delay	96	34	62	39	60	16	54	91	58	20	61	39	55	0	22	**53**
	Modif.	LOS	E	C	D	D	E	B	E	F	E	C	E	D	E	A	C	**D**
		Delay	64	27	44	46	80	18	72	86	59	20	60	49	61	0	24	**47**
PM	Exist.	LOS	E	C	D	D	D	A	D	F	D	B	F	D	E	A	C	**D**
		Delay	68	30	40	40	37	10	40	256	49	11	107	36	61	4	24	**44**
	Modif.	LOS	E	D	D	D	D	B	D	E	D	A	D	C	E	A	C	**D**
		Delay	66	39	46	49	50	13	49	60	42	7	41	34	59	4	20	**38**

24-hr Approach Counts

Turning Movement Counts (TMC)

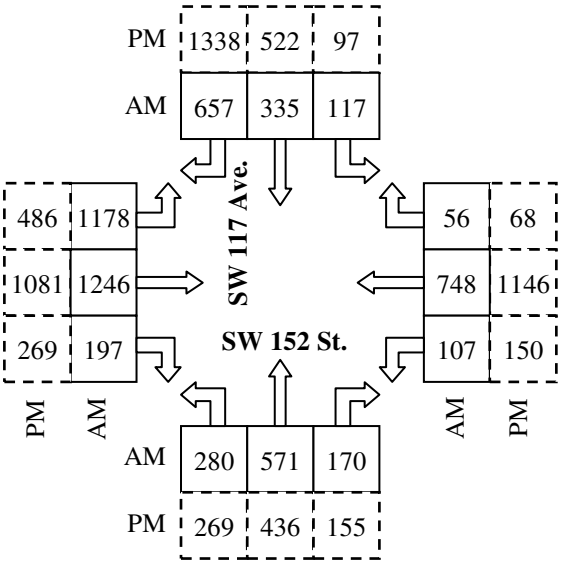

Figure 3: Traffic Data – *SW 117 Avenue and SW 152 Street*

Westbound approach: Sight distance obstruction to left-turn traffic.

Eastbound/Westbound: Left-turn lanes are not aligned to reduce the offset.

Eastbound approach: Tire skid marks.

Eastbound approach: Red light running.

Southbound approach: Lane change in/out right-turn lane.

Accident debris.

Figure 4: Field Review – *SW 117 Avenue and SW 152 Street*

3.1.4. Recommendations

Based on the safety analysis, field observations and traffic operations for the intersection of SW 117 Avenue and SW 152 Street, the following is recommended:

- Realignment of the westbound left-turn lane south of its current location to reduce the offset and line-up with the opposite eastbound left-turn lane.
- Provide turning guidelines for the westbound left-turn lane.
- Retiming/optimizing of the existing signal while maintaining cycle length for both the AM and PM peak hours.
- Closing the median opening on the east leg, and lengthen the westbound left-turn lane.
- Converting the southbound shared thru-right lane to a thru only lane.
- Installing new lane use signs for southbound approach.
- Resurfacing the eastbound approach.
- Refurbishing of pavement markings using thermoplastic painting.

A conceptual vision of the proposed roadway improvements is exhibited in *Figure 5*.

Figure 5: Conceptual Plan – *SW 117 Avenue and SW 152 Street*

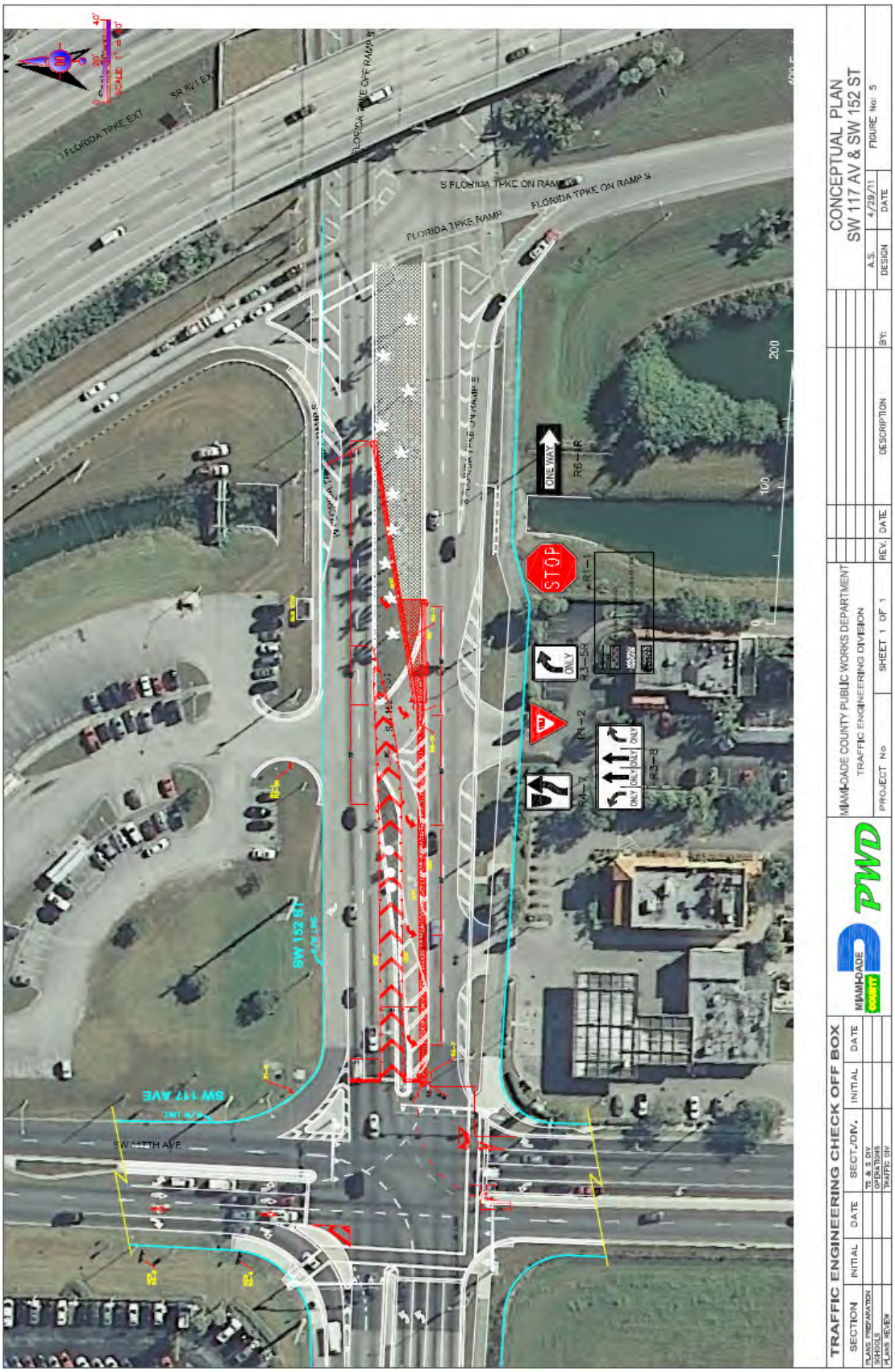

3.2. SW 122 Avenue and SW 120 Street

3.2.1. Site Description

This intersection is a signalized four legged intersection located in the unincorporated area of southwest Miami Dade County. SW 122 Avenue is a four lane major collector divided by a paved median that runs north-south, and SW 120 Street is a four lane major collector divided by a raised median that runs east-west.

3.2.2. Safety Conditions and Analysis

The intersection of SW 122 Avenue and SW 120 Street is ranked number 2 in our high crash locations list. A review of the hard copy police reports for the years 2006 through 2008 was performed. During the three-year analysis period, 142 relevant crashes occurred at the intersection. The analysis indicated that the average number of crashes per year is 47. The crash summaries, crash statistics and collision diagrams for the intersection are documented in *Appendix A*.

Based on the analysis of crash records for this intersection, the predominant types of crashes are shown in *Figure 6.*

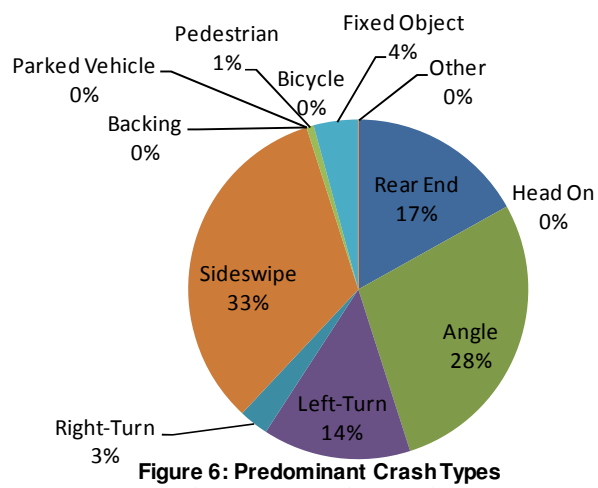

Figure 6: Predominant Crash Types SW 122 AVE & SW 120 ST

Calculated intersection mean crash per year were compared to the average Miami-Dade Crash Rate for County corridors to assess the safety conditions at the study intersection in relation to other roadways with similar traffic and geometric characteristics. This study is based on the 2007 FDOT's "Expected Value Analysis." *Table 8* illustrates the expected accident volume analysis of this intersection as well as the safety ratios and the confidence levels during the analysis period.

Based on a regression growth of 2% from the 2006 entering volume, the calculated safety ratios for the years 2006, 2007, and 2008 were 2.011, 3.656, and 2.453, respectively. The safety ratio for the three years averaged 2.707. Also, results of confidence level indicated that this intersection has been a high crash location during the three years with a confidence level higher than 99.95%.

From this analysis, it was determined that angle, left-turn, sideswipe and fixed object collisions presented abnormal crash patterns that exceed the threshold limits for the 95th percentile and 90th percentile confidence level. Those results indicate that these types of collisions were abnormally high during the period of 2006 through 2008. A detailed review of the abnormal crashes as well as probable countermeasures is presented in *Table 9*.

Table 8 – Crash Analysis – SW 122 Avenue and SW 120 Street

SW 122 Avenue & SW 120 Street

(4 Lane x 4 Lane, Signalized, With Turn Lanes, 4 Leg Intersection-Divided-Table28) - URBAN Spot

	TYPE OF CRASH	NUMBER OF CRASHES YEAR 2006	2007	2008	3 YEAR TOTAL CRASHE	% of Total	MEAN Accidents per Year	EXPECTED ANNUAL CRASH VALUE MEAN	90th Percentile	95th Percentile	ABNORMALLY HIGH CRASHES Mean	90th Percentil	95th Percentil
COLLISION TYPE	Rear End	4	12	8	24	8%	8.00	5.70	16.96	19.12	X		
	Head On	0	0	0	0	0%	0.00	0.33	1.02	1.15			
	Angle	11	23	6	40	10%	13.33	3.05	7.08	7.85	X	X	X
	Left Turn	8	5	7	20	6%	6.67	1.67	4.02	4.47	X	X	X
	Right Turn	1	2	1	4	1%	1.33	0.33	1.25	1.42	X	X	
	Sideswipe	10	23	14	47	11%	15.67	1.60	4.64	5.22	X	X	X
	Backed Into	0	0	0	0	0%	0.00	0.17	0.56	0.63			
	Coll. w/ Parked Car	0	0	0	0	0%	0.00	0.10	0.51	0.59			
	Coll. w/ Pedestrian	1	0	0	1	0%	0.33	0.28	1.04	1.19	X		
	Coll. w/ Bicycle	0	0	0	0	0%	0.00	0.09	0.33	0.38			
	Fixed Object	0	0	6	6	1%	2.00	0.03	0.21	0.24	X	X	X
	Ran Off Road	0	0	0	0	0%	0.00	0.00	0.00	0.00			
	Overtuned	0	0	0	0	0%	0.00	0.03	0.21	0.24			
	Other	0	0	0	0	0%	0.00	3.70	8.83	9.82			
	Total Crashes	35	65	42	142	23%	47.33	17.77	40.96	45.39	X	X	X
SEVERITY	PDO crashes	31	57	36	124	87%	41.33	9.93	22.30	24.67	X	X	X
	Fatal crashes	0	0	0	0	0%	0.00	0.05	0.26	0.29			
	Injury crashes	4	8	6	18	13%	6.00	13.14	33.08	36.90			
LIGHT CONDITIONS	Day Light	18	45	30	93	65%	31.00	12.40	29.18	32.39	X	X	
	Dusk	0	2	0	2	1%	0.67	0.28	0.87	0.98	X		
	Dawn	0	1	0	1	1%	0.33	0.17	0.56	0.63	X		
	Dark	17	17	12	46	32%	15.33	4.56	10.53	11.68	X	X	X
	Unknown	0	0	0	0	0%	0.00	0.35	1.05	1.18			
SURFACE CONDITIONS	Dry	30	57	33	120	85%	40.00	15.30	34.45	38.12	X	X	X
	Wet	5	8	7	20	14%	6.67	2.10	6.02	6.76	X	X	
	Others	0	0	2	2	1%	0.67	0.37	1.10	1.24	X		
MONTH OF A YEAR	January	5	7	5	17	12%	5.67	1.42	3.33	3.69	X	X	X
	February	0	3	3	6	4%	2.00	1.42	3.53	3.93	X		
	March	2	5	7	14	10%	4.67	1.67	4.12	4.59	X	X	X
	April	1	2	4	7	5%	2.33	1.30	3.21	3.57	X		
	May	2	8	4	14	10%	4.67	1.74	4.46	4.99	X	X	
	June	2	6	1	9	6%	3.00	1.38	3.49	3.90	X		
	July	4	5	1	10	7%	3.33	1.35	3.22	3.58	X	X	
	August	1	8	2	11	8%	3.67	1.56	3.99	4.46	X		
	September	4	3	4	11	8%	3.67	1.46	3.73	4.16	X		
	October	4	6	4	14	10%	4.67	1.47	3.59	4.00	X	X	X
	November	5	5	5	15	11%	5.00	1.39	3.53	3.94	X	X	X
	December	5	7	2	14	10%	4.67	1.61	4.43	4.97	X	X	
DAY OF THE WEEK	Sunday	4	6	2	12	8%	4.00	1.46	3.47	3.85	X	X	X
	Monday	3	9	3	15	11%	5.00	2.70	6.42	7.13	X		
	Tuesday	4	8	3	15	11%	5.00	2.49	6.18	6.88	X		
	Wednesday	9	14	9	32	23%	10.67	2.56	5.84	6.47	X	X	X
	Thursday	6	9	9	24	17%	8.00	2.88	7.20	8.03	X	X	
	Friday	5	11	9	25	18%	8.33	3.07	7.50	8.35	X	X	
	Saturday	4	8	7	19	13%	6.33	2.61	6.40	7.13	X		
HOUR OF THE DAY	00:00-06:00	1	4	2	7	5%	2.33	1.70	3.39	3.71	X		
	06:00-09:00	9	16	11	36	25%	12.00	1.98	5.12	5.72	X	X	X
	09:00-11:00	4	12	3	19	13%	6.33	1.72	4.23	4.71	X	X	X
	11:00-13:00	2	7	6	15	11%	5.00	2.40	6.30	7.05	X		
	13:00-15:00	0	0	6	6	4%	2.00	1.95	5.32	5.96	X		
	15:00-18:00	5	11	6	22	15%	7.33	3.58	7.81	8.62	X		
	18:00-24:00	14	15	8	37	26%	12.33	4.42	10.63	11.82	X	X	X

	YEAR 1	2	3	3-Year Average
Average Daily Traffic ADT *(Vehicles per Day)*	50,544	51,575	52,628	51,582
Florida Average Crash rate *(Crashes per Million Entering Vehicles)*	0.420	0.424	0.394	0.413
Traffic Base	18.449	18.825	19.209	18.828
Actual Crash Rate *(Crashes per Million Entering Vehicles)*	1.897	3.453	2.186	2.512
Critical Crash Rate *(Crashes per Million Entering Vehicles)*	0.944	0.944	0.891	0.926
Safety Ratio	**2.011**	**3.656**	**2.453**	**2.707**
High Crash Location??	***YES***	***YES***	***YES***	***YES***

$$Actual\ \ Crash\ \ Rate = \frac{A \times 1{,}000{,}000}{V}$$

Where:
A = Total number of crashes or number of crashes by type occurring in a 1 year period.
V = Average Annual Daily Traffic X 365

$$CriticalCrashRate = AVR + \frac{0.5}{TB} + TF\sqrt{\frac{AVR}{TB}}$$

Where:
AVR = Average Statewide Crash Rate for a particular type of intersection or roadway segment.
TB = Traffic Base
TF = Test Factor (z-value)
= *1.96 (assume 95% Confidence Level for RURAL areas)*
= *3.29 (assume 99.95% Confidence Level for URBAN areas)*

$$Traffic\ Base = \frac{Years \times ADT \times 365}{1{,}000{,}000}$$

$$Safety\ \ Ratio = \frac{Actual\ \ Crash\ \ Rate}{Critical\ \ Crash\ \ Rate}$$

Confidence Level (%)	Constant Z
68.30	1.00
86.60	1.50
90.00	1.64
95.00	1.96
95.50	2.00
98.80	2.50
99.00	2.58
99.70	3.00
99.95	3.29

Table 9 – Abnormal Crash Details & Countermeasures
SW 122 Avenue and SW 120 Street

SW 122 Avenue & SW 120 Street

(4 Lane x 4 Lane, Signalized, With Turn Lanes, 4 Leg Intersection -Table 28) - URBAN Spot

			NUMBER OF CRASHES YEAR 2006	2007	2008	3 YEAR TOTAL CRASHE	% of Total	MEAN Accidents per Year	Possible Cause(s)	Counter-measure(s)
Angle	Total Angle Crashes		**11**	**23**	**6**	**40**	**100%**	**13.33**	(4)	4
	Lighting Conditions	Day Light	8	21	2	31	78%	10.33	(9)	6
		Dawn	0	0	0	0	0%	0.00	(10)	9
		Dark	3	2	4	9	23%	3.00	(12)	
	Hours of Day	00:00 - 06:00	1	1	0	2	5%	0.67		
		06:00 - 09:00	3	5	2	10	25%	3.33		
		09:00 - 11:00	0	1	0	1	3%	0.33		
		11:00 - 13:00	0	4	2	6	15%	2.00		
		13:00 - 15:00	0	0	0	0	0%	0.00		
		15:00 - 18:00	0	0	1	1	3%	0.33		
		18:00 - 24:00	7	12	1	20	50%	6.67		
	Direction	NB + EB	0	0	1	1	3%	0.33		
		NB + WB	10	17	4	31	78%	10.33		
		SB + EB	1	3	0	4	10%	1.33		
		SB + WB	0	3	1	4	10%	1.33		
		Unknown	0	0	0	0	0%	0.00		

			NUMBER OF CRASHES YEAR 2006	2007	2008	3 YEAR TOTAL CRASHE	% of Total	MEAN Accidents per Year	Possible Cause(s)	Counter-measure(s)
Left Turn	Total Left Turn Crashes		**8**	**5**	**7**	**20**	**100%**	**6.67**	(4)	2
	Lighting Conditions	Day Light	6	3	5	14	70%	4.67	(10)	6
		Dawn	0	0	0	0	0%	0.00	(13)	13
		Dark	2	2	2	6	30%	2.00		15
	Hours of Day	00:00 - 06:00	2	1	1	4	20%	1.33		
		06:00 - 09:00	0	0	0	0	0%	0.00		
		09:00 - 11:00	0	1	1	2	10%	0.67		
		11:00 - 13:00	1	0	0	1	5%	0.33		
		13:00 - 15:00	5	0	1	6	30%	2.00		
		15:00 - 18:00	0	2	3	5	25%	1.67		
		18:00 - 24:00	0	1	1	2	10%	0.67		
	Direction	NB → WB	0	0	0	0	0%	0.00		
		WB → SB	5	1	4	10	50%	3.33		
		SB → EB	0	1	1	2	10%	0.67		
		EB → NB	3	3	2	8	40%	2.67		
		Unknown	0	0	0	0	0%	0.00		

			NUMBER OF CRASHES YEAR 2006	2007	2008	3 YEAR TOTAL CRASHE	% of Total	MEAN Accidents per Year	Possible Cause(s)	Counter-measure(s)
Sideswipe (Overtake)	Total Sideswipe Crashes		**10**	**23**	**14**	**47**	**100%**	**15.67**	(1)	4
	Lighting Conditions	Day Light	9	20	11	40	85%	13.33	(16)	19
		Dawn	0	0	0	0	0%	0.00	(19)	21
		Dark	1	3	3	7	15%	2.33		
	Hours of Day	00:00 - 06:00	0	0	1	1	2%	0.33		
		06:00 - 09:00	4	5	3	12	26%	4.00		
		09:00 - 11:00	3	7	2	12	26%	4.00		
		11:00 - 13:00	0	2	3	5	11%	1.67		
		13:00 - 15:00	0	0	1	1	2%	0.33		
		15:00 - 18:00	2	6	2	10	21%	3.33		
		18:00 - 24:00	1	3	2	6	13%	2.00		
	Direction	North	5	13	10	28	60%	9.33		
		South	2	1	3	6	13%	2.00		
		East	2	3	1	6	13%	2.00		
		West	1	6	0	7	15%	2.33		
		Unknown	0	0	0	0	0%	0.00		

			NUMBER OF CRASHES YEAR 2006	2007	2008	3 YEAR TOTAL CRASHE	% of Total	MEAN Accidents per Year	Possible Cause(s)	Counter-measure(s)
Fixed Object	Total Fixed Object Crashes		**0**	**0**	**6**	**6**	**100%**	**2.00**	(2)	5
	Lighting Conditions	Day Light	0	0	3	3	50%	1.00	(17)	19
		Dawn	0	0	0	0	0%	0.00	(18)	
		Dark	0	0	3	3	50%	1.00		
	Hours of Day	00:00 - 06:00	0	0	1	1	17%	0.33		
		06:00 - 09:00	0	0	2	2	33%	0.67		
		09:00 - 11:00	0	0	1	1	17%	0.33		
		11:00 - 13:00	0	0	1	1	17%	0.33		
		13:00 - 15:00	0	0	0	0	0%	0.00		
		15:00 - 18:00	0	0	0	0	0%	0.00		
		18:00 - 24:00	0	0	1	1	17%	0.33		
	Direction	North	0	0	0	0	0%	0.00		
		South	0	0	2	2	33%	0.67		
		East	0	0	4	4	67%	1.33		
		West	0	0	0	0	0%	0.00		
		Unknown	0	0	0	0	0%	0.00		

3.2.3. Traffic Operation Conditions and Analysis

In order to identify the traffic operation characteristics and safety relevant conflicts, field observations at SW 122 Avenue and SW 120 Street were performed on a typical weekday on November 19, 2010. A summary of the traffic data is presented in *Figure 7*, and the field review is presented in *Figure 8*.

This intersection has single left-turn bays for all approaches, and the northbound approach has an exclusive right-turn lane. The signal operation has split phases for northbound and southbound traffic, and protected/permissive for eastbound and westbound left-turn traffic.

Long queues were observed for westbound left-turn with vehicles spilling back and blocking the through lane. Also, this westbound left-turn movement struggles to cross the opposing eastbound through movement. Additionally, red light running was observed at the intersection.

It was noticed that the northbound vehicles do not respect the left-turn red arrow. Also, vehicles were constantly changing lanes to access the exclusive right-turn lane.

3.2.4. Recommendations

Based on the safety analysis, field observations and traffic operations for the intersection of SW 122 Avenue and SW 120 Street, the following is recommended:

- Lengthen the westbound left-turn lane to approximately 500 ft.
- Retiming/optimizing of the existing signal while maintaining cycle length for both the AM and PM peak hours.
- Installing "No Turn on Red" (R10-11) signs for northbound approach.
- Modifying the fences on the southeast and southwest corners to improve the sight distance triangles for northbound approach.
- Resurfacing the intersection.
- Refurbishing of pavement markings using thermoplastic painting.

A conceptual vision of the proposed roadway improvements is exhibited in *Figure 9*.

24-hr Approach Counts

Turning Movement Counts (TMC)

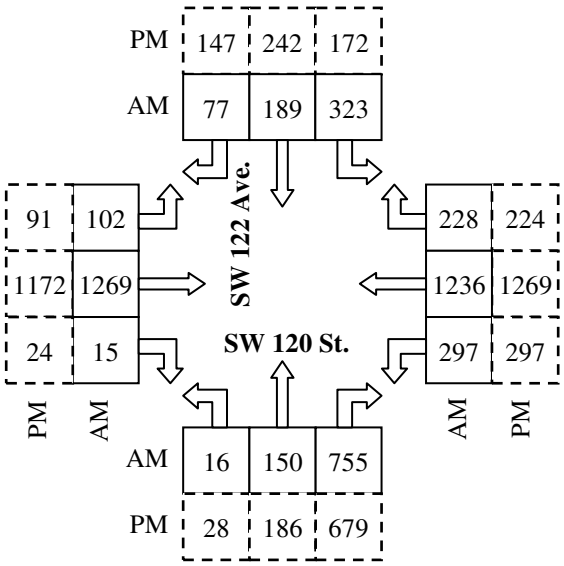

Figure 7: Traffic Data – *SW 122 Avenue and SW 120 Street*

Northbound approach: Right-turn vehicles do not respect the red arrow.

Eastbound/Westbound: Left-turn lanes are not aligned to reduce the offset.

Northbound approach: Tire skid marks.

Westbound approach: Red light running.

Northbound approach: Sight distance obstruction to oncoming traffic.

Faded pavement markings and deteriorated pavement conditions.

Figure 8: Field Review – *SW 122 Avenue and SW 120 Street*

Figure 9: Conceptual Plan – *SW 122 Avenue and SW 120 Street*

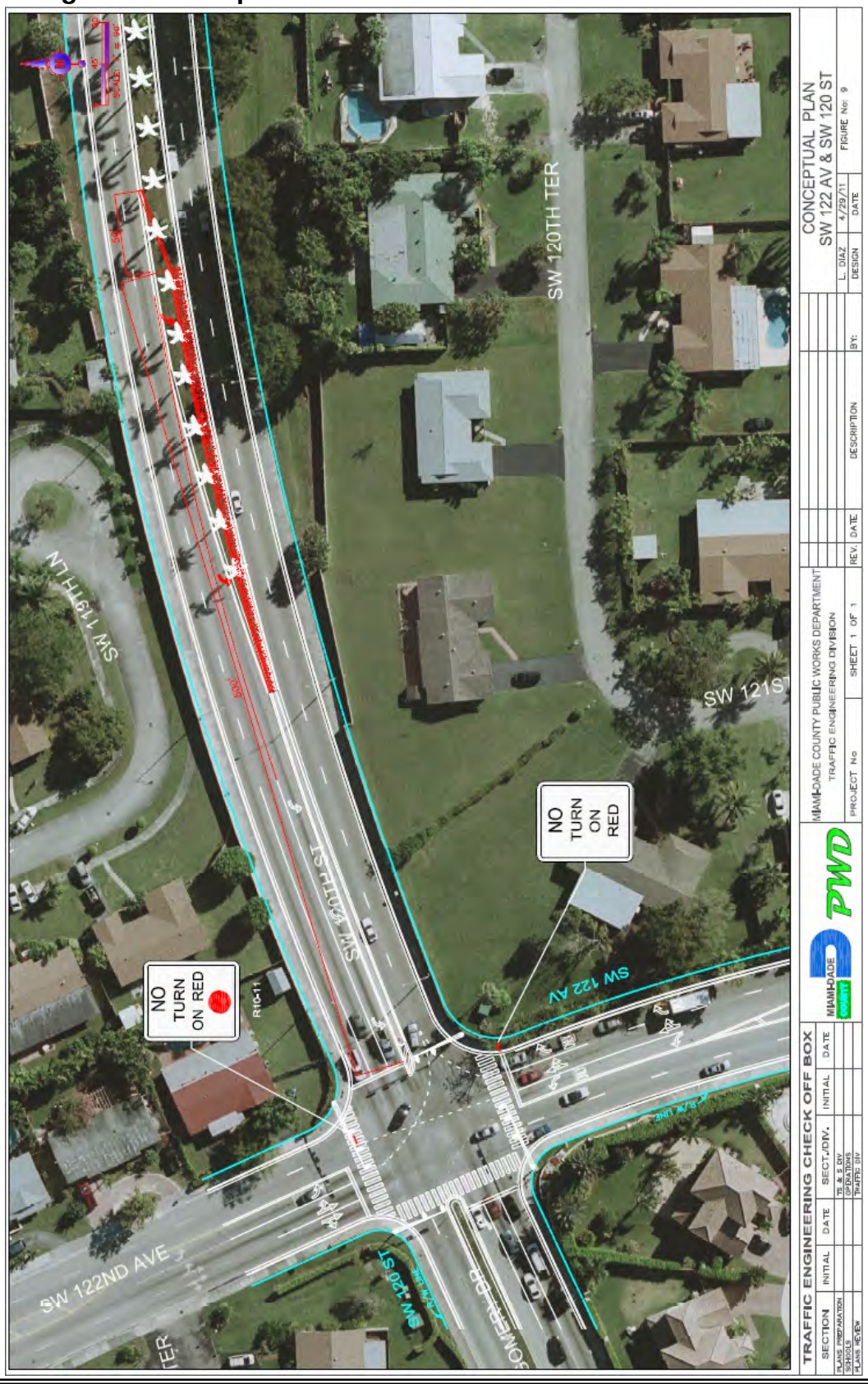

3.3. SW 137 Avenue and SW 26 Street (Coral Way)

3.3.1. Site Description

This intersection is a signalized four legged intersection located in the unincorporated area of the western part of Miami Dade County. SW 137 Avenue is a six lane urban arterial divided by a raised median that runs north-south, and SW 26 Street is a four lane urban arterial divided by a raised median that runs east-west.

3.3.2. Safety Conditions and Analysis

The intersection of SW 137 Avenue and SW 26 Street is ranked number 3 in our high crash locations list. A review of the hard copy police reports for the years 2006 through 2008 was performed. During the three-year analysis period, 160 relevant crashes occurred at the intersection. The analysis indicated that the average number of crashes per year is 53. The crash summaries, crash statistics and collision diagrams for the intersection are documented in *Appendix A*.

Based on the analysis of crash records for this intersection, the predominant types of crashes are shown in *Figure 10.*

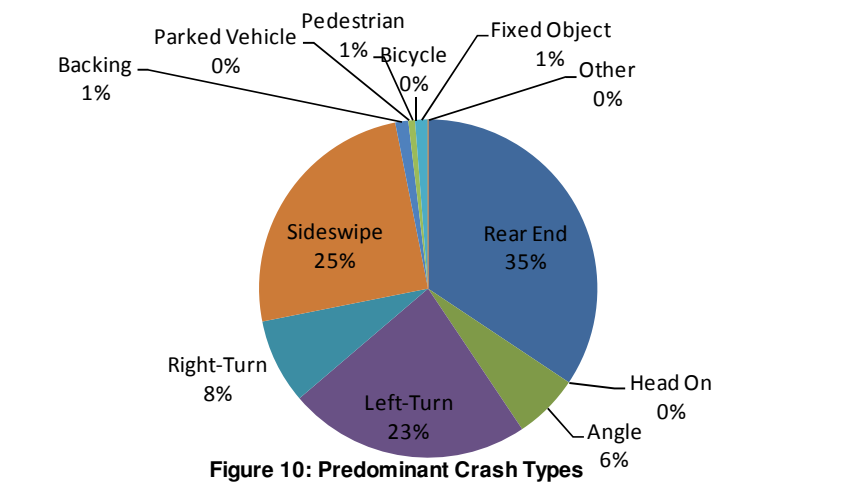

Figure 10: Predominant Crash Types SW 137 AVE & SW 26 ST

Calculated intersection mean crash per year were compared to the average Miami-Dade Crash Rate for County corridors to assess the safety conditions at the study intersection in relation to other roadways with similar traffic and geometric characteristics. This study is based on the 2007 FDOT's "Expected Value Analysis." *Table 10* illustrates the expected accident volume analysis of this intersection as well as the safety ratios and the confidence levels during the analysis period.

Based on a regression growth of 2% from the 2006 entering volume, the calculated safety ratios for the years 2006, 2007, and 2008 were 1.814, 2.367, and 1.717, respectively. The safety ratio for the three years averaged 1.966. Also, results of confidence level indicated that this intersection has been a high crash location during the three years with a confidence level higher than 99.95%.

From this analysis, it was determined that left-turn, right-turn and sideswipe collisions presented abnormal crash patterns that exceed the threshold limits for the 95th percentile and 90th percentile confidence level. Also, rear end crash type exceeds the limit for 90th percentile confidence level. Those results indicate that these types of collisions were abnormally high during the period of 2006 through 2008. A detailed review of the abnormal crashes as well as probable countermeasures is presented in *Table 11*.

Table 10 – Crash Analysis – SW 137 Avenue and SW 26 Street

SW 137 Avenue & SW 26 Street

(6 Lane x 4 Lane, Signalized, With Turn Lanes, 4 Leg Intersection-Table35) - URBAN Spot

	TYPE OF CRASH	NUMBER OF CRASHES YEAR 2006	2007	2008	3 YEAR TOTAL CRASHE	% of Total	MEAN Accidents per Year	EXPECTED ANNUAL CRASH VALUE MEAN	90th Percentile	95th Percentile	ABNORMALLY HIGH CRASHES Mean	90th Percentil	95th Percentil
COLLISION TYPE	Rear End	16	22	17	55	17%	18.33	8.68	17.26	18.90	X	X	
	Head On	0	0	0	0	0%	0.00	0.60	1.64	1.84			
	Angle	0	5	5	10	2%	3.33	5.40	9.19	9.92			
	Left Turn	17	10	10	37	9%	12.33	3.00	6.13	6.73	X	X	X
	Right Turn	4	6	3	13	3%	4.33	0.46	1.36	1.53	X	X	X
	Sideswipe	10	20	10	40	8%	13.33	2.58	4.92	5.37	X	X	X
	Backed Into	1	0	1	2	0%	0.67	0.28	0.84	0.94	X		
	Coll. w/ Parked Car	0	0	0	0	0%	0.00	0.12	0.57	0.65			
	Coll. w/ Pedestrian	1	0	0	1	0%	0.33	0.74	1.80	2.00			
	Coll. w/ Bicycle	0	0	0	0	0%	0.00	0.14	0.49	0.55			
	Fixed Object	0	1	1	2	0%	0.67	0.79	2.01	2.24			
	Ran Off Road	0	0	0	0	0%	0.00	0.01	0.11	0.13			
	Overtuned	0	0	0	0	0%	0.00	0.04	0.28	0.33			
	Other	0	0	0	0	0%	0.00	8.67	21.05	23.42			
	Total Crashes	49	64	47	160	23%	53.33	31.51	54.94	59.43	X		
SEVERITY	PDO crashes	45	63	40	148	93%	49.33	19.21	36.95	40.35	X	X	X
	Fatal crashes	0	0	0	0	0%	0.00	0.16	0.56	0.63			
	Injury crashes	4	1	7	12	8%	4.00	20.77	38.34	41.71			
LIGHT CONDITIONS	Day Light	36	45	34	115	72%	38.33	19.89	35.12	38.03	X	X	X
	Dusk	0	0	0	0	0%	0.00	0.61	1.43	1.58			
	Dawn	3	0	1	4	3%	1.33	0.38	1.03	1.16	X	X	X
	Dark	9	17	12	38	24%	12.67	10.22	18.94	20.61	X		
	Unknown	1	2	0	3	2%	1.00	0.41	1.15	1.30	X		
SURFACE CONDITIONS	Dry	28	51	42	121	76%	40.33	26.41	45.71	49.41	X		
	Wet	4	11	5	20	13%	6.67	4.41	8.78	9.62	X		
	Others	17	2	0	19	12%	6.33	0.69	1.88	2.11	X	X	X
MONTH OF A YEAR	January	3	7	5	15	9%	5.00	2.57	5.04	5.52	X		
	February	5	6	5	16	10%	5.33	2.37	4.59	5.02	X	X	X
	March	2	5	4	11	7%	3.67	3.09	5.92	6.46	X		
	April	3	3	1	7	4%	2.33	2.57	5.30	5.82			
	May	5	4	6	15	9%	5.00	2.51.	4.81	5.25		X	
	June	6	3	2	11	7%	3.67	2.81	5.74	6.30	X		
	July	5	5	4	14	9%	4.67	2.60	4.96	5.42	X		
	August	1	3	3	7	4%	2.33	3.00	5.66	6.17			
	September	7	9	5	21	13%	7.00	2.48	4.92	5.39	X	X	X
	October	8	7	3	18	11%	6.00	2.89	5.40	5.88	X	X	X
	November	3	6	5	14	9%	4.67	2.41	4.85	5.32	X		
	December	1	6	4	11	7%	3.67	2.22	4.55	5.00	X		
DAY OF THE WEEK	Sunday	5	5	6	16	10%	5.33	4.00	6.58	7.08	X		
	Monday	4	17	5	26	16%	8.67	4.62	9.23	10.11	X		
	Tuesday	10	10	6	26	16%	8.67	4.46	7.81	8.46	X	X	X
	Wednesday	6	5	7	18	11%	6.00	4.56	8.62	9.40	X		
	Thursday	4	9	6	19	12%	6.33	5.04	9.04	9.80	X		
	Friday	9	12	11	32	20%	10.67	4.86	9.39	10.26	X	X	X
	Saturday	11	6	6	23	14%	7.67	3.98	8.10	8.89	X		
HOUR OF THE DAY	00:00-06:00	1	2	0	3	2%	1.00	3.79	8.65	9.58			
	06:00-09:00	5	9	10	24	15%	8.00	3.44	6.94	7.61	X	X	X
	09:00-11:00	7	8	4	19	12%	6.33	2.58	5.30	5.82	X	X	X
	11:00-13:00	8	4	10	22	14%	7.33	3.12	5.78	6.29	X	X	X
	13:00-15:00	7	12	1	20	13%	6.67	3.57	6.32	6.85	X	X	
	15:00-18:00	10	13	9	32	20%	10.67	6.38	11.52	12.50	X		
	18:00-24:00	11	16	13	40	25%	13.33	8.60	15.51	16.83	X		

	YEAR 1	2	3	3-Year Average
Average Daily Traffic ADT *(Vehicles per Day)*	66,914	68,280	69,673	68,289
Florida Average Crash rate *(Crashes per Million Entering Vehicles)*	0.579	0.568	0.566	0.571
Traffic Base	24.424	24.922	25.431	24.925
Actual Crash Rate *(Crashes per Million Entering Vehicles)*	2.006	2.568	1.848	2.141
Critical Crash Rate *(Crashes per Million Entering Vehicles)*	1.106	1.085	1.076	1.089
Safety Ratio	**1.814**	**2.367**	**1.717**	**1.966**
High Crash Location??	***YES***	***YES***	***YES***	***YES***

$$Actual\ \ Crash\ \ Rate = \frac{A \times 1{,}000{,}000}{V}$$

Where:
A = Total number of crashes or number of crashes by type occurring in a 1 year period.
V = Average Annual Daily Traffic X 365

$$CriticalCrashRate = AVR + \frac{0.5}{TB} + TF\sqrt{\frac{AVR}{TB}}$$

Where:
AVR = Average Statewide Crash Rate for a particular type of intersection or roadway segment.
TB = Traffic Base
TF = Test Factor (z-value)
= 1.96 (assume 95% Confidence Level for RURAL areas)
= 3.29 (assume 99.95% Confidence Level for URBAN areas)

$$Traffic\ Base = \frac{Years \times ADT \times 365}{1{,}000{,}000}$$

$$Safety\ \ Ratio = \frac{Actual\ \ Crash\ \ Rate}{Critical\ \ Crash\ \ Rate}$$

Confidence Level (%)	Constant Z
68.30	1.00
86.60	1.50
90.00	1.64
95.00	1.96
95.50	2.00
98.80	2.50
99.00	2.58
99.70	3.00
99.95	3.29

Table 11 – Abnormal Crash Details & Countermeasures
SW 137 Avenue and SW 26 Street

SW 137 Avenue & SW 26 Street

(6 Lane x 4 Lane, Signalized, With Turn Lanes, 4 Leg Intersection -Table 35) - URBAN Spot

			NUMBER OF CRASHES YEAR 2006	2007	2008	3 YEAR TOTAL CRASHE	% of Total	MEAN Accidents per Year	Possible Cause(s)	Counter-measure(s)
Left Turn	Total Left Turn Crashes		17	10	10	37	100%	12.33	(9) (13)	9 16 17
	Lighting Conditions	Day Light	14	9	7	30	81%	10.00		
		Dawn	0	0	0	0	0%	0.00		
		Dark	3	1	3	7	19%	2.33		
	Hours of Day	00:00 - 06:00	1	0	0	1	3%	0.33		
		06:00 - 09:00	1	2	2	5	14%	1.67		
		09:00 - 11:00	3	3	0	6	16%	2.00		
		11:00 - 13:00	4	0	3	7	19%	2.33		
		13:00 - 15:00	1	3	0	4	11%	1.33		
		15:00 - 18:00	3	1	1	5	14%	1.67		
		18:00 - 24:00	4	1	4	9	24%	3.00		
	Direction	NB → WB	5	7	2	14	38%	4.67		
		WB → SB	2	0	4	6	16%	2.00		
		SB → EB	8	2	3	13	35%	4.33		
		EB → NB	2	1	1	4	11%	1.33		
		Unknown	0	0	0	0	0%	0.00		

			NUMBER OF CRASHES YEAR 2006	2007	2008	3 YEAR TOTAL CRASHE	% of Total	MEAN Accidents per Year	Possible Cause(s)	Counter-measure(s)
Sideswipe (Overtake)	Total Sideswipe Crashes		10	20	10	40	100%	13.33	(8) (16) (18) (19) (20) (21)	4 19 20 21
	Lighting Conditions	Day Light	8	14	6	28	70%	9.33		
		Dawn	0	0	0	0	0%	0.00		
		Dark	2	6	4	12	30%	4.00		
	Hours of Day	00:00 - 06:00	1	1	0	2	5%	0.67		
		06:00 - 09:00	0	3	2	5	13%	1.67		
		09:00 - 11:00	0	1	1	2	5%	0.67		
		11:00 - 13:00	2	1	2	5	13%	1.67		
		13:00 - 15:00	2	1	0	3	8%	1.00		
		15:00 - 18:00	1	9	1	11	28%	3.67		
		18:00 - 24:00	4	4	4	12	30%	4.00		
	Direction	North	6	4	4	14	35%	4.67		
		South	0	5	2	7	18%	2.33		
		East	3	6	2	11	28%	3.67		
		West	1	5	2	8	20%	2.67		
		Unknown	0	0	0	0	0%	0.00		

			NUMBER OF CRASHES YEAR 2006	2007	2008	3 YEAR TOTAL CRASHE	% of Total	MEAN Accidents per Year	Possible Cause(s)	Counter-measure(s)
Right Turn	Total Right Turn Crashes		4	6	3	13	100%	4.33	(1) (18) (19) (20)	4 19 21
	Lighting Conditions	Day Light	4	3	3	10	77%	3.33		
		Dawn	0	3	0	3	23%	1.00		
		Dark	0	0	0	0	0%	0.00		
	Hours of Day	00:00 - 06:00	0	0	0	0	0%	0.00		
		06:00 - 09:00	0	0	1	1	8%	0.33		
		09:00 - 11:00	3	1	0	4	31%	1.33		
		11:00 - 13:00	1	0	0	1	8%	0.33		
		13:00 - 15:00	0	1	0	1	8%	0.33		
		15:00 - 18:00	0	0	2	2	15%	0.67		
		18:00 - 24:00	0	4	0	4	31%	1.33		
	Direction	NB→EB	2	3	1	6	46%	2.00		
		EB→SB	1	3	1	5	38%	1.67		
		WB→NB	1	0	1	2	15%	0.67		
		SB→WB	0	0	0	0	0%	0.00		
		Unknown	0	0	0	0	0%	0.00		

			NUMBER OF CRASHES YEAR 2006	2007	2008	3 YEAR TOTAL CRASHE	% of Total	MEAN Accidents per Year	Possible Cause(s)	Counter-measure(s)
Rear End	Total Rear End Crashes		16	22	17	55	100%	18.33	(1) (2) (8)	5 6 8
	Lighting Conditions	Day Light	13	17	14	44	80%	14.67		
		Dawn	0	0	0	0	0%	0.00		
		Dark	3	5	3	11	20%	3.67		
	Hours of Day	00:00 - 06:00	0	0	0	0	0%	0.00		
		06:00 - 09:00	2	4	2	8	15%	2.67		
		09:00 - 11:00	2	2	2	6	11%	2.00		
		11:00 - 13:00	1	3	3	7	13%	2.33		
		13:00 - 15:00	4	7	1	12	22%	4.00		
		15:00 - 18:00	4	2	5	11	20%	3.67		
		18:00 - 24:00	3	4	4	11	20%	3.67		
	Direction	North	4	8	5	17	31%	5.67		
		South	0	4	4	8	15%	2.67		
		East	7	5	3	15	27%	5.00		
		West	5	5	5	15	27%	5.00		
		Unknown	0	0	0	0	0%	0.00		

3.3.3. Traffic Operation Conditions and Analysis

In order to identify the traffic operation characteristics and safety relevant conflicts, field observations at SW 137 Avenue and SW 26 Street were performed on a typical weekday on November 3, 2010. A summary of the traffic data is presented in *Figure 11*, and the field review is presented in *Figure 12*.

This intersection has single left-turn bays for all approaches, and the northbound and eastbound approaches have exclusive right-turn lanes. The left-turn signal operation is protected/permissive for all approaches.

A large number of right-turns were observed for northbound. Also, the eastbound/westbound left-turn movements struggle to cross the opposing through movements. Red light running was observed at the intersection. Vehicles were constantly changing lanes to access the exclusive northbound right-turn lane.

It was noticed that the pavement conditions are deteriorated and pavement markings are faded. The eastbound exclusive right-turn lane has no right arrows pavement markings.

3.3.4. Recommendations

Based on the safety analysis, field observations and traffic operations for the intersection of SW 137 Avenue and SW 26 Street, the following is recommended:

- Realignment of the westbound and southbound left-turn lanes to reduce the offset and line-up with the opposite left-turn lanes.
- Retiming/optimizing of the existing signal while maintaining cycle length for both the AM and PM peak hours.
- Providing an exclusive right-turn lane for the westbound approach.
- Channelizing northbound and westbound right-turn lanes at the approach.
- Closing the median openings on the north and west legs.
- Resurfacing the intersection.
- Refurbishing of pavement markings using thermoplastic painting.

A conceptual vision of the proposed roadway improvements is exhibited in *Figure 13*.

24-hr Approach Counts

Turning Movement Counts (TMC)

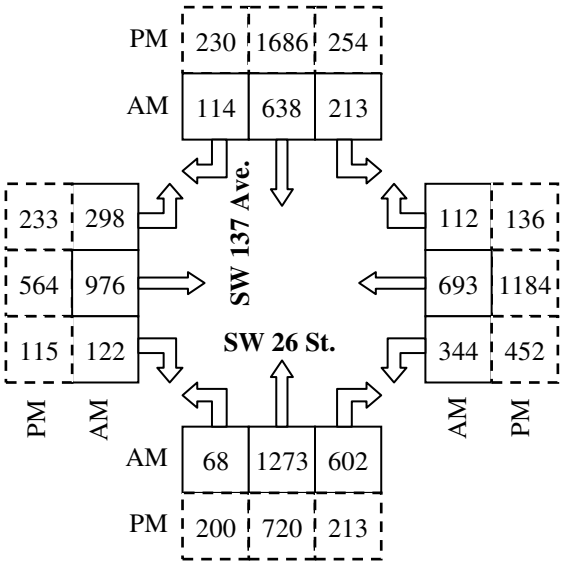

Figure 11: Traffic Data – *SW 137 Avenue and SW 26 Street*

Northbound/Southbound: Left-turn lanes are not aligned to reduce the offset.

Eastbound approach: Right-turn lane with no pavement markings or signs.

Eastbound approach: Tire skid marks.

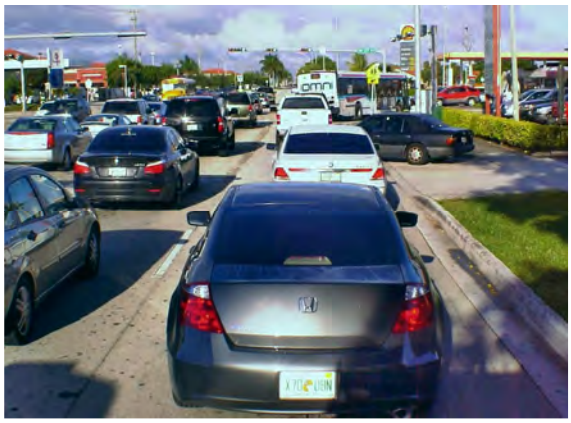

Westbound approach: Large number of right-turn vehicles.

Deteriorated pavement conditions.

Faded pavement markings and deteriorated pavement conditions.

Figure 12: Field Review – *SW 137 Avenue and SW 26 Street*

Figure 13: Conceptual Plan – *SW 137 Avenue and SW 26 Street*

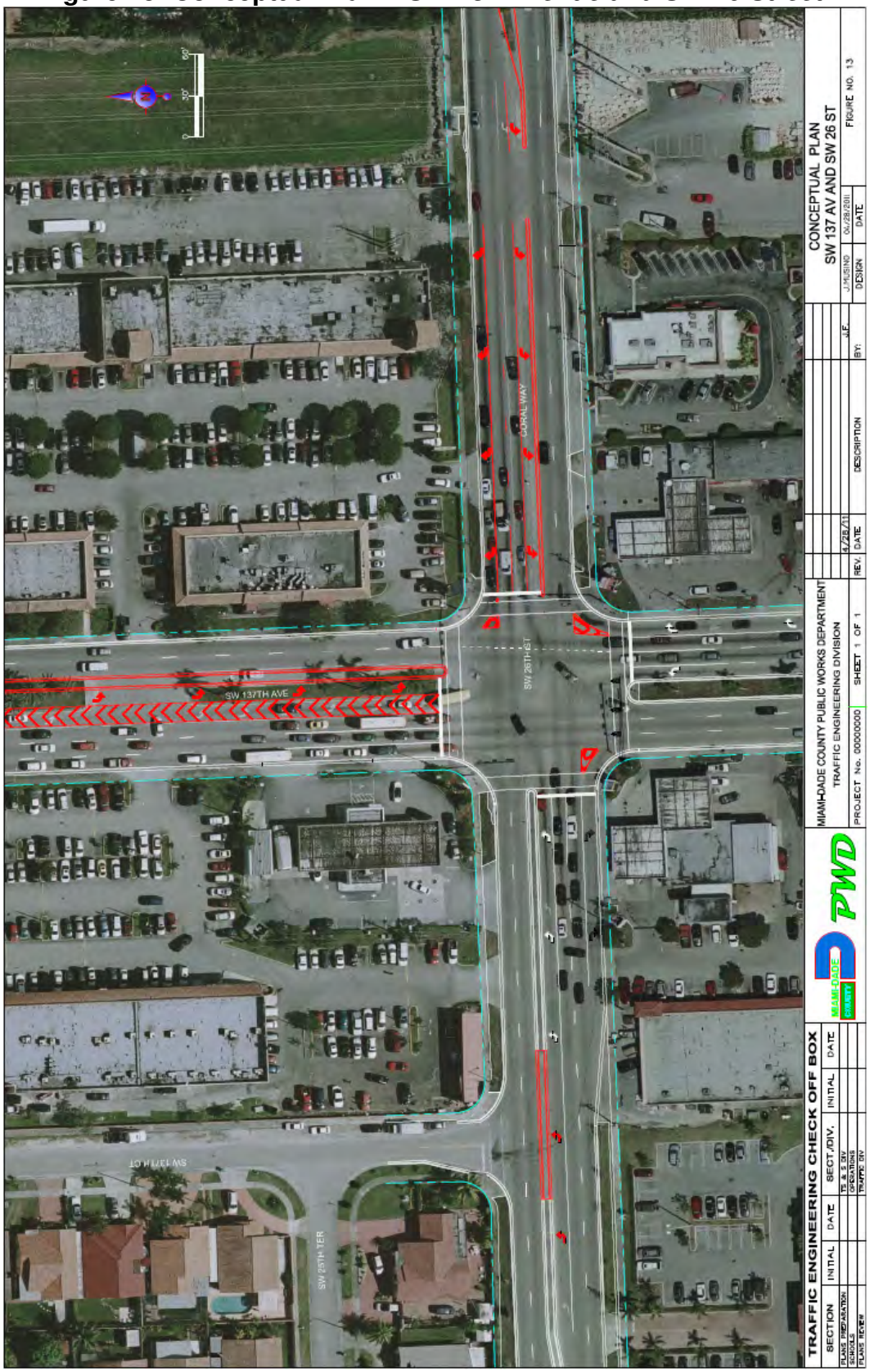

3.4. SW 117 Avenue and SW 104 Street

3.4.1. Site Description

This intersection is a signalized four legged intersection located in the unincorporated area of southwest Miami Dade County. SW 117 Avenue is a four lane urban arterial divided by a raised median that runs north-south, and SW 104 Street is a six lane urban arterial divided by a raised median that runs east-west.

3.4.2. Safety Conditions and Analysis

The intersection of SW 117 Avenue and SW 104 Street is ranked number 4 in our high crash locations list. A review of the hard copy police reports for the years 2006 through 2008 was performed. During the three-year analysis period, 190 relevant crashes occurred at the intersection. The analysis indicated that the average number of crashes per year is 63. The crash summaries, crash statistics and collision diagrams for the intersection are documented in *Appendix A*.

Based on the analysis of crash records for this intersection, the predominant types of crashes are shown in *Figure 14.*

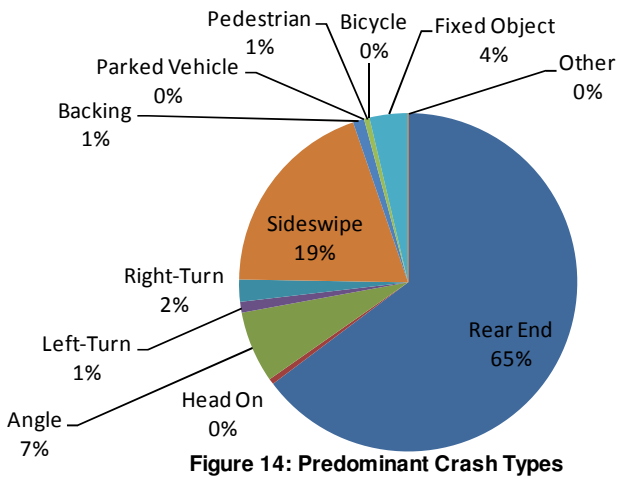

Figure 14: Predominant Crash Types SW 117 AVE & SW 104 ST

Calculated intersection mean crash per year were compared to the average Miami-Dade Crash Rate for County corridors to assess the safety conditions at the study intersection in relation to other roadways with similar traffic and geometric characteristics. This study is based on the 2007 FDOT's "Expected Value Analysis." *Table 12* illustrates the expected accident volume analysis of this intersection as well as the safety ratios and the confidence levels during the analysis period.

Based on a regression growth of 2% from the 2006 entering volume, the calculated safety ratios for the years 2006, 2007, and 2008 were 1.676, 1.880, and 2.001, respectively. The safety ratio for the three years averaged 1.852. Also, results of confidence level indicated that this intersection has been a high crash location during the three years with a confidence level higher than 99.95%.

From this analysis, it was determined that rear end, sideswipe and fixed object collisions presented abnormal crash patterns that exceed the threshold limits for the 95th percentile and 90th percentile confidence level. Those results indicate that these types of collisions were abnormally high during the period of 2006 through 2008. A detailed review of the abnormal crashes as well as probable countermeasures is presented in *Table 13*.

Table 12 – Crash Analysis – SW 117 Avenue and SW 104 Street

SW 117 Avenue & SW 104 Street

(6 Lane x 4 Lane, Signalized, With Turn Lanes, 4 Leg Intersection -Table 35) - URBAN Spot

	TYPE OF CRASH	NUMBER OF CRASHES YEAR 2006	2007	2008	3 YEAR TOTAL CRASHE	% of Total	MEAN Accidents per Year	EXPECTED ANNUAL CRASH VALUE MEAN	90th Percentile	95th Percentile	ABNORMALLY HIGH CRASHES Mean	90th Percentil	95th Percentil
COLLISION TYPE	Rear End	36	39	48	123	32%	41.00	8.68	17.26	18.90	X	X	X
	Head On	0	1	0	1	0%	0.33	0.60	1.64	1.84			
	Angle	7	4	2	13	3%	4.33	5.40	9.19	9.92			
	Left Turn	2	0	0	2	0%	0.67	3.00	6.13	6.73			
	Right Turn	1	2	1	4	1%	1.33	0.46	1.36	1.53	X		
	Sideswipe	10	15	12	37	6%	12.33	2.58	4.92	5.37	X	X	X
	Backed Into	1	0	1	2	0%	0.67	0.28	0.84	0.94	X		
	Coll. w/ Parked Car	0	0	0	0	0%	0.00	0.12	0.57	0.65			
	Coll. w/ Pedestrian	0	0	1	1	0%	0.33	0.74	1.80	2.00			
	Coll. w/ Bicycle	0	0	0	0	0%	0.00	0.14	0.49	0.55			
	Fixed Object	0	3	4	7	1%	2.33	0.79	2.01	2.24	X	X	X
	Ran Off Road	0	0	0	0	0%	0.00	0.01	0.11	0.13			
	Overtuned	0	0	0	0	0%	0.00	0.04	0.28	0.33			
	Other	0	0	0	0	0%	0.00	8.67	21.05	23.42			
	Total Crashes	57	64	69	190	24%	63.33	31.51	54.94	59.43	X	X	X
SEVERITY	PDO crashes	53	60	64	177	93%	59.00	19.21	36.95	40.35	X	X	X
	Fatal crashes	0	0	0	0	0%	0.00	0.16	0.56	0.63			
	Injury crashes	4	4	5	13	7%	4.33	20.77	38.34	41.71			
LIGHT CONDITIONS	Day Light	41	49	57	147	77%	49.00	19.89	35.12	38.03	X	X	X
	Dusk	4	3	4	11	6%	3.67	0.61	1.43	1.58	X	X	X
	Dawn	0	0	0	0	0%	0.00	0.38	1.03	1.16			
	Dark	12	12	8	32	17%	10.67	10.22	18.94	20.61	X		
	Unknown	0	0	0	0	0%	0.00	0.41	1.15	1.30			
SURFACE CONDITIONS	Dry	49	47	58	154	81%	51.33	26.41	45.71	49.41	X	X	X
	Wet	7	15	10	32	17%	10.67	4.41	8.78	9.62	X	X	X
	Others	1	2	1	4	2%	1.33	0.69	1.88	2.11	X		
MONTH OF A YEAR	January	9	8	7	24	13%	8.00	2.57	5.04	5.52	X	X	X
	February	2	1	7	10	5%	3.33	2.37	4.59	5.02	X		
	March	7	2	3	12	6%	4.00	3.09	5.92	6.46	X		
	April	7	2	6	15	8%	5.00	2.57	5.30	5.82	X		
	May	5	3	10	18	9%	6.00	2.51.	4.81	5.25		X	X
	June	5	1	3	9	5%	3.00	2.81	5.74	6.30	X		
	July	4	6	4	14	7%	4.67	2.60	4.96	5.42	X		
	August	4	3	6	13	7%	4.33	3.00	5.66	6.17	X		
	September	5	18	6	29	15%	9.67	2.48	4.92	5.39	X	X	X
	October	2	10	9	21	11%	7.00	2.89	5.40	5.88	X	X	X
	November	4	6	6	16	8%	5.33	2.41	4.85	5.32	X	X	X
	December	3	4	2	9	5%	3.00	2.22	4.55	5.00	X		
DAY OF THE WEEK	Sunday	3	5	5	13	7%	4.33	4.00	6.58	7.08	X		
	Monday	12	9	16	37	19%	12.33	4.62	9.23	10.11	X	X	X
	Tuesday	9	14	16	39	21%	13.00	4.46	7.81	8.46	X	X	X
	Wednesday	7	14	9	30	16%	10.00	4.56	8.62	9.40	X	X	X
	Thursday	6	9	11	26	14%	8.67	5.04	9.04	9.80	X		
	Friday	10	8	9	27	14%	9.00	4.86	9.39	10.26	X		
	Saturday	10	5	3	18	9%	6.00	3.98	8.10	8.89	X		
HOUR OF THE DAY	00:00-06:00	6	3	0	9	5%	3.00	3.79	8.65	9.58			
	06:00-09:00	7	9	10	26	14%	8.67	3.44	6.94	7.61	X	X	X
	09:00-11:00	6	4	8	18	9%	6.00	2.58	5.30	5.82	X	X	X
	11:00-13:00	6	3	8	17	9%	5.67	3.12	5.78	6.29	X		
	13:00-15:00	6	7	8	21	11%	7.00	3.57	6.32	6.85	X	X	X
	15:00-18:00	10	25	18	53	28%	17.67	6.38	11.52	12.50	X	X	X
	18:00-24:00	16	13	17	46	24%	15.33	8.60	15.51	16.83	X		

	YEAR 1	2	3	3-Year Average
Average Daily Traffic ADT *(Vehicles per Day)*	90,505	92,352	94,237	92,365
Florida Average Crash rate *(Crashes per Million Entering Vehicles)*	0.579	0.568	0.566	0.571
Traffic Base	33.034	33.709	34.397	33.713
Actual Crash Rate *(Crashes per Million Entering Vehicles)*	1.725	1.899	2.006	1.877
Critical Crash Rate *(Crashes per Million Entering Vehicles)*	1.030	1.010	1.003	1.014
Safety Ratio	**1.676**	**1.880**	**2.001**	**1.852**
High Crash Location??	***YES***	***YES***	***YES***	***YES***

$$Actual\ \ Crash\ \ Rate = \frac{A \times 1{,}000{,}000}{V}$$

Where:
A = Total number of crashes or number of crashes by type occurring in a 1 year period.
V = Average Annual Daily Traffic X 365

$$CriticalCrashRate = AVR + \frac{0.5}{TB} + TF\sqrt{\frac{AVR}{TB}}$$

$$Traffic\,Base = \frac{Years \times ADT \times 365}{1{,}000{,}000}$$

$$Safety\ \ Ratio = \frac{Actual\ \ Crash\ \ Rate}{Critical\ \ Crash\ \ Rate}$$

Where:
AVR = Average Statewide Crash Rate for a particular type of intersection or roadway segment.
TB = Traffic Base
TF = Test Factor (z-value)
= 1.96 (assume 95% Confidence Level for RURAL areas)
= 3.29 (assume 99.95% Confidence Level for URBAN areas)

Confidence Level (%)	Constant Z
68.30	1.00
86.60	1.50
90.00	1.64
95.00	1.96
95.50	2.00
98.80	2.50
99.00	2.58
99.70	3.00
99.95	3.29

Table 13 – Abnormal Crash Details & Countermeasures SW 117 Avenue and SW 104 Street

SW 117 Avenue & SW 104 Street

(6 Lane x 4 Lane, Signalized, With Turn Lanes, 4 Leg Intersection -Table 35) - URBAN Spot

			NUMBER OF CRASHES YEAR			3 YEAR TOTAL CRASHE	% of Total	MEAN Accidents per Year	Possible Cause(s)	Counter-measure(s)
			2006	2007	2008					
Rear End	Total Rear End Crashes		**36**	**39**	**48**	**123**	**100%**	**41.00**	(1)	4
	Lighting Conditions	Day Light	29	30	40	99	80%	33.00	(2)	5
		Dawn	1	1	4	6	5%	2.00	(4)	6
		Dark	6	8	4	18	15%	6.00		
	Hours of Day	00:00 - 06:00	3	1	0	4	3%	1.33		
		06:00 - 09:00	4	4	9	17	14%	5.67		
		09:00 - 11:00	4	4	4	12	10%	4.00		
		11:00 - 13:00	5	0	5	10	8%	3.33		
		13:00 - 15:00	3	4	5	12	10%	4.00		
		15:00 - 18:00	7	16	13	36	29%	12.00		
		18:00 - 24:00	10	10	12	32	26%	10.67		
	Direction	North	6	5	11	22	18%	7.33		
		South	7	3	8	18	15%	6.00		
		East	13	10	17	40	33%	13.33		
		West	10	21	12	43	35%	14.33		
		Unknown	0	0	0	0	0%	0.00		

			NUMBER OF CRASHES YEAR			3 YEAR TOTAL CRASHE	% of Total	MEAN Accidents per Year	Possible Cause(s)	Counter-measure(s)
			2006	2007	2008					
Sideswipe (Overtake)	Total Sideswipe Crashes		**10**	**15**	**12**	**37**	**100%**	**12.33**	(17)	4
	Lighting Conditions	Day Light	8	14	10	32	86%	10.67	(18)	19
		Dawn	2	1	1	4	11%	1.33	(20)	
		Dark	0	0	1	1	3%	0.33	(21)	
	Hours of Day	00:00 - 06:00	0	0	0	0	0%	0.00		
		06:00 - 09:00	3	3	1	7	19%	2.33		
		09:00 - 11:00	0	0	1	1	3%	0.33		
		11:00 - 13:00	1	2	2	5	14%	1.67		
		13:00 - 15:00	1	2	3	6	16%	2.00		
		15:00 - 18:00	3	6	3	12	32%	4.00		
		18:00 - 24:00	2	2	2	6	16%	2.00		
	Direction	North	3	3	2	8	22%	2.67		
		South	2	2	3	7	19%	2.33		
		East	3	6	6	15	41%	5.00		
		West	2	4	1	7	19%	2.33		
		Unknown	0	0	0	0	0%	0.00		

			NUMBER OF CRASHES YEAR			3 YEAR TOTAL CRASHE	% of Total	MEAN Accidents per Year	Possible Cause(s)	Counter-measure(s)
			2006	2007	2008					
Fixed Object	Total Fixed Object Crashes		**0**	**3**	**4**	**7**	**100%**	**2.33**	(2)	5
	Lighting Conditions	Day Light	0	1	2	3	43%	1.00	(6)	12
		Dawn	0	0	0	0	0%	0.00	(17)	
		Dark	0	2	2	4	57%	1.33		
	Hours of Day	00:00 - 06:00	0	1	0	1	14%	0.33		
		06:00 - 09:00	0	0	0	0	0%	0.00		
		09:00 - 11:00	0	1	1	2	29%	0.67		
		11:00 - 13:00	0	0	0	0	0%	0.00		
		13:00 - 15:00	0	0	1	1	14%	0.33		
		15:00 - 18:00	0	1	0	1	14%	0.33		
		18:00 - 24:00	0	0	2	2	29%	0.67		
	Direction	North Leg	0	0	1	1	14%	0.33		
		South Leg	0	0	1	1	14%	0.33		
		East Leg	0	1	1	2	29%	0.67		
		West Leg	0	2	1	3	43%	1.00		
		Unknown	0	0	0	0	0%	0.00		

3.4.3. Traffic Operation Conditions and Analysis

In order to identify the traffic operation characteristics and safety relevant conflicts, field observations at SW 117 Avenue and SW 104 Street were performed on a typical weekday on November 22, 2010. A summary of the traffic data is presented in *Figure 15*, and the field review is presented in *Figure 16*.

This intersection has double left-turn bays for all approaches, and the northbound approach has an exclusive right-turn lane. The signal operation is protected for all left-turn approaches.

Eastbound left-turn vehicles are spilled back at through lanes. Conflict was observed between northbound right-turns and eastbound thru movement. Also, stop bars are located too close to the crosswalks, and vehicles stop a few feet behind the stop bar to allow for the turning vehicles to safely maneuver the turn.

Vehicles exit the driveway in north leg cross the southbound five-lane approach to turn left heading northbound. Also, southbound vehicles drive over the marked median.

It was noticed that not all legs have crosswalks and no ADA compatible ramps are provided.

3.4.4. Recommendations

Based on the safety analysis, field observations and traffic operations for the intersection of SW 117 Avenue and SW 104 Street, the following are recommended:

- Lengthen the eastbound double left-turn lanes to 350 ft each.
- Replacement of the north leg painted median with a raised curbed median.
- Retiming/optimizing of the existing signal while maintaining cycle length for both the AM and PM peak hours.
- Installing lane control (R3-8) signs for all approaches.
- Relocation of the stop bars to standard distances from crosswalks to allow for safe left-turns.
- Providing ADA approved pedestrian ramps at all corners.
- Resurfacing the intersection.
- Refurbishing of pavement markings using thermoplastic painting.

A conceptual vision of the proposed roadway improvements is exhibited in *Figure 17*.

24-hr Approach Counts

Turning Movement Counts (TMC)

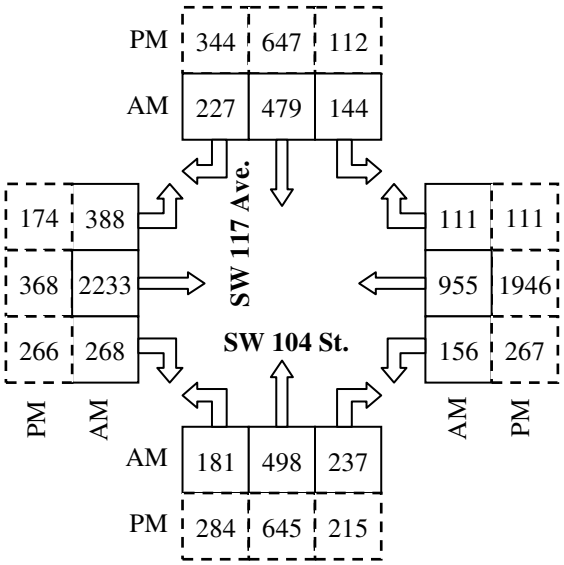

Figure 15: Traffic Data – *SW 117 Avenue and SW 104 Street*

Faded/No double left-turn guidelines at the intersection.

Southbound: No lane use signs.

Eastbound approach: Deteriorated pavement conditions.

Southeast corner: Pedestrian sign needs to be replaced.

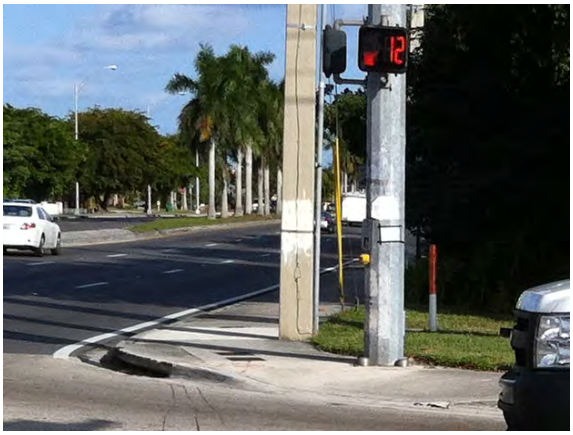

Southeast corner: Pedestrian ramps are not ADA compatible.

South leg: Faded pavement markings and crosswalks are too close to stop line.

Figure 16: Field Review – *SW 117 Avenue and SW 104 Street*

Figure 17: Conceptual Plan – *SW 117 Avenue and SW 104 Street*

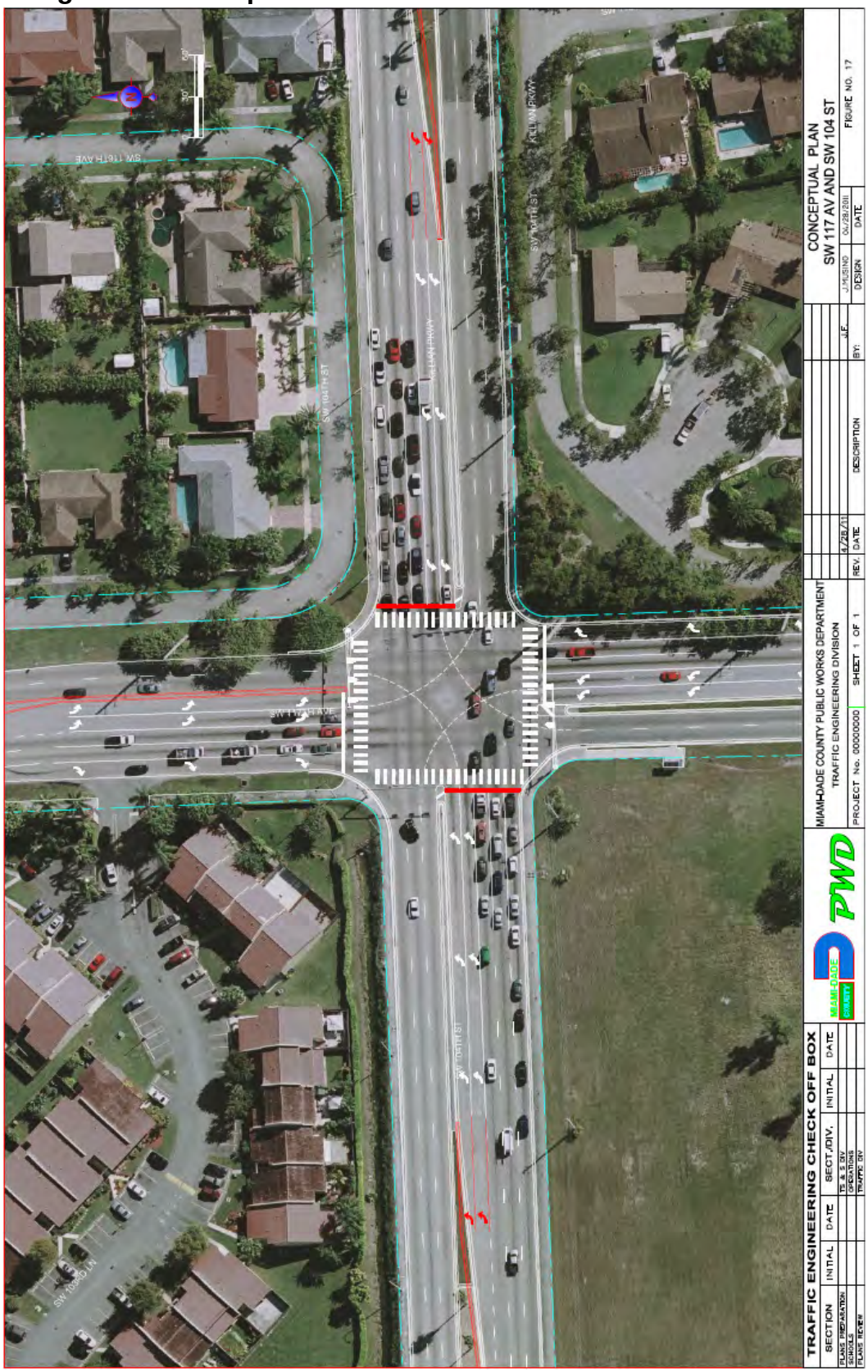

3.5. SW 137 Avenue and SW 152 Street

3.5.1. Site Description

This intersection is a signalized four legged intersection located in the unincorporated area of southwest Miami Dade County. SW 137 Avenue is a six lane urban arterial divided by a raised median that runs north-south, and SW 152 Street is a six lane urban arterial divided by a raised median that runs east-west.

3.5.2. Safety Conditions and Analysis

The intersection of SW 137 Avenue and SW 152 Street is ranked number 5 in our high crash locations list. A review of the hard copy police reports for the years 2006 through 2008 was performed. During the three-year analysis period, 181 relevant crashes occurred at the intersection. The analysis indicated that the average number of crashes per year is 60. The crash summaries, crash statistics and collision diagrams for the intersection are documented in *Appendix A*.

Based on the analysis of crash records for this intersection, the predominant types of crashes are shown in *Figure 18.*

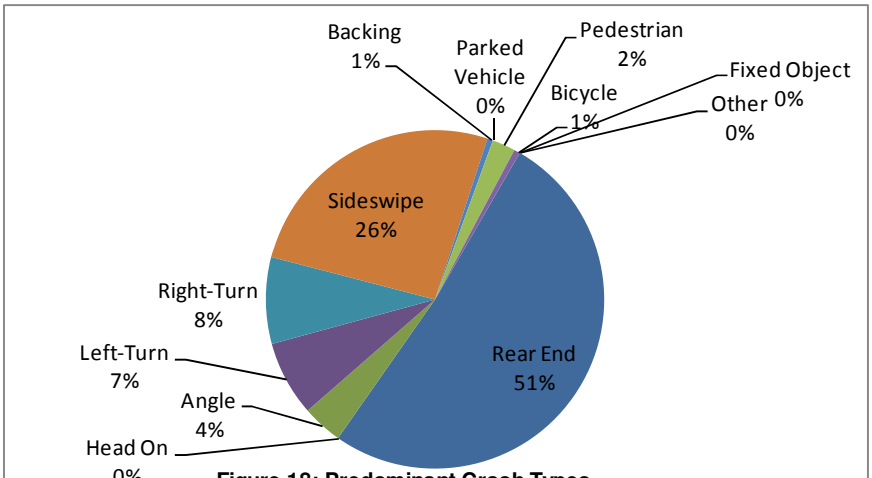

Figure 18: Predominant Crash Types SW 137 AVE & SW 152 ST

Calculated intersection mean crash per year were compared to the average Miami-Dade Crash Rate for County corridors to assess the safety conditions at the study intersection in relation to other roadways with similar traffic and geometric characteristics. This study is based on the 2007 FDOT's "Expected Value Analysis." *Table 14* illustrates the expected accident volume analysis of this intersection as well as the safety ratios and the confidence levels during the analysis period.

Based on a regression growth of 2% from the 2006 entering volume, the calculated safety ratios for the years 2006, 2007, and 2008 were 2.015, 1.734, and 1.834, respectively. The safety ratio for the three years averaged 1.861. Also, results of confidence level indicated that this intersection has been a high crash location during the three years with a confidence level higher than 99.95%.

From this analysis, it was determined that rear end, right-turn and sideswipe collisions presented abnormal crash patterns that exceed the threshold limits for the 95th percentile and 90th percentile confidence level. Those results indicate that these types of collisions were abnormally high during the period of 2006 through 2008. A detailed review of the abnormal crashes as well as probable countermeasures is presented in *Table 15*.

Table 14 – Crash Analysis – SW 137 Avenue and SW 152 Street

SW 137 Avenue & SW 152 Street

(6 Lane x 6 Lane, Signalized, With Turn Lanes, 4 Leg Intersection -Table 36) - URBAN Spot

	TYPE OF CRASH	NUMBER OF CRASHES YEAR 2006	2007	2008	3 YEAR TOTAL CRASHE	% of Total	MEAN Accidents per Year	EXPECTED ANNUAL CRASH VALUE MEAN	90th Percentile	95th Percentile	ABNORMALLY HIGH CRASHES Mean	90th Percentil	95th Percentil
COLLISION TYPE	Rear End	34	33	26	93	26%	31.00	7.80	17.12	18.90	X	X	X
	Head On	0	0	0	0	0%	0.00	0.31	0.91	1.03			
	Angle	1	0	6	7	2%	2.33	4.11	8.06	8.82			
	Left Turn	8	2	3	13	3%	4.33	3.20	6.52	7.16	X		
	Right Turn	5	6	4	15	3%	5.00	0.87	1.88	2.07	X	X	X
	Sideswipe	15	15	17	47	8%	15.67	2.98	6.83	7.57	X	X	X
	Backed Into	1	0	0	1	0%	0.33	0.44	1.26	1.42			
	Coll. w/ Parked Car	0	0	0	0	0%	0.00	0.09	0.41	0.48			
	Coll. w/ Pedestrian	1	0	3	4	1%	1.33	0.44	1.34	1.51	X		
	Coll. w/ Bicycle	0	0	1	1	0%	0.33	0.22	0.67	0.76	X		
	Fixed Object	0	0	0	0	0%	0.00	0.62	1.52	1.69			
	Ran Off Road	0	0	0	0	0%	0.00	0.00	0.00	0.00			
	Overtuned	0	0	0	0	0%	0.00	0.07	0.29	0.34			
	Other	0	0	0	0	0%	0.00	5.09	11.59	12.84			
	Total Crashes	65	56	60	181	23%	60.33	26.24	47.45	51.51	X	X	X
SEVERITY	PDO crashes	63	53	54	170	94%	56.67	14.33	26.64	28.99	X	X	X
	Fatal crashes	0	0	0	0	0%	0.00	0.20	0.85	0.97			
	Injury crashes	2	3	6	11	6%	3.67	19.22	40.94	45.10			
LIGHT CONDITIONS	Day Light	49	44	47	140	77%	46.67	17.36	32.17	35.01	X	X	X
	Dusk	0	0	1	1	1%	0.33	0.64	1.46	1.62			
	Dawn	16	0	1	17	9%	5.67	0.18	0.59	0.66	X	X	X
	Dark	0	12	11	23	13%	7.67	7.36	15.05	16.53	X		
	Unknown	0	0	0	0	0%	0.00	0.09	0.47	0.55			
SURFACE CONDITIONS	Dry	36	53	57	146	81%	48.67	22.04	41.61	45.35	X	X	X
	Wet	3	2	3	8	4%	2.67	3.22	6.25	6.83			
	Others	26	1	0	27	15%	9.00	0.36	0.96	1.07	X	X	X
MONTH OF A YEAR	January	7	6	6	19	10%	6.33	2.49	4.66	5.08	X	X	X
	February	5	3	6	14	8%	4.67	1.91	4.01	4.41	X	X	X
	March	8	5	6	19	10%	6.33	2.33	5.43	6.02	X	X	X
	April	5	6	6	17	9%	5.67	1.89	4.46	4.95	X	X	X
	May	7	3	3	13	7%	4.33	2.16	4.04	4.40	X	X	
	June	6	5	7	18	10%	6.00	1.93	4.00	4.39	X	X	X
	July	5	3	4	12	7%	4.00	2.38	5.17	5.70	X		
	August	2	6	3	11	6%	3.67	2.51	4.97	5.44	X		
	September	6	4	6	16	9%	5.33	1.60	3.13	3.42	X	X	X
	October	5	4	5	14	8%	4.67	2.13	4.00	4.35	X	X	X
	November	4	3	4	11	6%	3.67	1.98	4.35	4.81.	X		
	December	5	8	4	17	9%	5.67	2.31	4.78	5.26	X	X	X
DAY OF THE WEEK	Sunday	8	6	8	22	12%	7.33	3.60	7.06	7.73	X	X	
	Monday	13	8	9	30	17%	10.00	3.42	6.95	7.63	X	X	X
	Tuesday	9	8	7	24	13%	8.00	3.71	6.93	7.54	X	X	X
	Wednesday	6	14	6	26	14%	8.67	4.02	7.66	8.35	X	X	X
	Thursday	11	7	10	28	15%	9.33	4.36	8.22	8.97	X	X	X
	Friday	10	6	12	28	15%	9.33	4.16	8.40	9.21	X	X	X
	Saturday	8	7	8	23	13%	7.67	2.36	5.17	5.71	X	X	X
HOUR OF THE DAY	00:00-06:00	1	2	1	4	2%	1.33	2.20	4.63	5.10			
	06:00-09:00	13	8	9	30	17%	10.00	3.64	7.22	7.91	X	X	X
	09:00-11:00	3	3	6	12	7%	4.00	2.04	4.45	4.91	X		
	11:00-13:00	4	6	3	13	7%	4.33	2.56	5.59	6.17	X		
	13:00-15:00	15	8	7	30	17%	10.00	3.38	6.82	7.48	X	X	X
	15:00-18:00	16	14	16	46	25%	15.33	5.09	9.37	10.19	X	X	X
	18:00-24:00	13	15	18	46	25%	15.33	6.71	13.41	14.69	X	X	X

	YEAR 1	2	3	3-Year Average
Average Daily Traffic ADT *(Vehicles per Day)*	84,514	86,239	87,999	86,251
Florida Average Crash rate *(Crashes per Million Entering Vehicles)*	0.579	0.568	0.566	0.571
Traffic Base	30.848	31.477	32.120	31.482
Actual Crash Rate *(Crashes per Million Entering Vehicles)*	2.107	1.779	1.868	1.918
Critical Crash Rate *(Crashes per Million Entering Vehicles)*	1.046	1.026	1.018	1.030
Safety Ratio	**2.015**	**1.734**	**1.834**	**1.861**
High Crash Location??	***YES***	***YES***	***YES***	***YES***

$$Actual\ \ Crash\ \ Rate = \frac{A \times 1{,}000{,}000}{V}$$

Where:
A = Total number of crashes or number of crashes by type occurring in a 1 year period.
V = Average Annual Daily Traffic X 365

$$CriticalCrashRate = AVR + \frac{0.5}{TB} + TF\sqrt{\frac{AVR}{TB}}$$

Where:
AVR = Average Statewide Crash Rate for a particular type of intersection or roadway segment.
TB = Traffic Base
TF = Test Factor (z-value)
= *1.96 (assume 95% Confidence Level for RURAL areas)*
= *3.29 (assume 99.95% Confidence Level for URBAN areas)*

$$Traffic\ Base = \frac{Years \times ADT \times 365}{1{,}000{,}000}$$

$$Safety\ \ Ratio = \frac{Actual\ \ Crash\ \ Rate}{Critical\ \ Crash\ \ Rate}$$

Confidence Level (%)	Constant Z
68.30	1.00
86.60	1.50
90.00	1.64
95.00	1.96
95.50	2.00
98.80	2.50
99.00	2.58
99.70	3.00
99.95	3.29

Table 15 – Abnormal Crash Details & Countermeasures SW 137 Avenue and SW 152 Street

SW 137 Avenue & SW 152 Street

(6 Lane x 6 Lane, Signalized, With Turn Lanes, 4 Leg Intersection -Table 36) - URBAN Spot

			NUMBER OF CRASHES YEAR 2006	2007	2008	3 YEAR TOTAL CRASHES	% of Total	MEAN Accidents per Year	Possible Cause(s)	Counter-measure(s)
Rear End	Total Rear End Crashes		**34**	**33**	**26**	**93**	**100%**	**31.00**	(1)	1
	Lighting Conditions	Day Light	24	29	21	74	80%	24.67	(2)	2
		Dawn	0	0	0	0	0%	0.00	(4)	5
		Dark	10	4	5	19	20%	6.33	(5)	6
	Hours of Day	00:00 - 06:00	1	1	1	3	3%	1.00	(8)	8
		06:00 - 09:00	8	5	6	19	20%	6.33		
		09:00 - 11:00	1	1	1	3	3%	1.00		
		11:00 - 13:00	2	3	0	5	5%	1.67		
		13:00 - 15:00	5	6	4	15	16%	5.00		
		15:00 - 18:00	8	10	5	23	25%	7.67		
		18:00 - 24:00	9	7	9	25	27%	8.33		
	Direction	North	8	5	4	17	18%	5.67		
		South	8	10	10	28	30%	9.33		
		East	6	9	10	25	27%	8.33		
		West	12	9	2	23	25%	7.67		
		Unknown	0	0	0	0	0%	0.00		

			NUMBER OF CRASHES YEAR 2006	2007	2008	3 YEAR TOTAL CRASHES	% of Total	MEAN Accidents per Year	Possible Cause(s)	Counter-measure(s)
Right Turn	Total Right Turn Crashes		**5**	**6**	**4**	**15**	**100%**	**5.00**	(2)	4
	Lighting Conditions	Day Light	5	5	4	14	93%	4.67	(8)	5
		Dawn	0	0	0	0	0%	0.00	(9)	8
		Dark	0	1	0	1	7%	0.33		9
	Hours of Day	00:00 - 06:00	0	0	0	0	0%	0.00		
		06:00 - 09:00	0	0	0	0	0%	0.00		
		09:00 - 11:00	1	0	0	1	7%	0.33		
		11:00 - 13:00	1	2	2	5	33%	1.67		
		13:00 - 15:00	2	2	0	4	27%	1.33		
		15:00 - 18:00	1	0	2	3	20%	1.00		
		18:00 - 24:00	0	2	0	2	13%	0.67		
	Direction	NB → EB	1	2	2	5	33%	1.67		
		WB → NB	2	1	0	3	20%	1.00		
		SB → WB	1	1	1	3	20%	1.00		
		EB → SB	1	2	1	4	27%	1.33		
		Unknown	0	0	0	0	0%	0.00		

			NUMBER OF CRASHES YEAR 2006	2007	2008	3 YEAR TOTAL CRASHES	% of Total	MEAN Accidents per Year	Possible Cause(s)	Counter-measure(s)
Sideswipe (Overtake)	Total Sideswipe Crashes		**15**	**15**	**17**	**47**	**100%**	**15.67**	(8)	4
	Lighting Conditions	Day Light	12	9	12	33	70%	11.00	(17)	8
		Dawn	0	0	2	2	4%	0.67	(18)	19
		Dark	3	6	3	12	26%	4.00	(19)	21
	Hours of Day	00:00 - 06:00	0	1	0	1	2%	0.33	(20)	
		06:00 - 09:00	3	3	2	8	17%	2.67		
		09:00 - 11:00	0	1	3	4	9%	1.33		
		11:00 - 13:00	1	1	1	3	6%	1.00		
		13:00 - 15:00	5	0	2	7	15%	2.33		
		15:00 - 18:00	5	3	3	11	23%	3.67		
		18:00 - 24:00	1	6	6	13	28%	4.33		
	Direction	North	3	6	4	13	28%	4.33		
		South	5	5	5	15	32%	5.00		
		East	6	3	7	16	34%	5.33		
		West	1	1	1	3	6%	1.00		
		Unknown	0	0	0	0	0%	0.00		

3.5.3. Traffic Operation Conditions and Analysis

In order to identify the traffic operation characteristics and safety relevant conflicts, field observations at SW 137 Avenue and SW 152 Street were performed on a typical weekday on November 19, 2010. A summary of the traffic data is presented in *Figure 19*, and field review is presented in *Figure 20*.

This intersection has double left-turn bays for all approaches, and the northbound, southbound and westbound approaches have exclusive right-turn lanes. The signal operation is protected for all left-turn approaches.

Northbound approach lanes at this intersection present two through lanes and an exclusive right-turn while three receiving lanes exist for the approach lanes. This geometric condition and the lack of channelization for the northbound right-turn lane facilitate that several vehicles use the right-turn lane to circumvent the northbound through traffic in the middle of intersection during the AM and PM peak periods.

This intersection provides an extra receiving lane that facilitates both southbound and westbound right-turn movements. These movements were observed delayed during the opposite left-turns or perpendicular through movements that could operate concurrently. This issue could be associated to the lack of adequate channelization and markings within the intersection.

Vehicles exiting the south leg and north leg driveways were observed creating potential conflicts with northbound/southbound traffic. Also, large westbound and southbound left-turn traffic volumes spill back and block the through traffic. Red light running was frequently observed at eastbound/northbound and westbound directions.

3.5.4. Recommendations

Based on the safety analysis, field observations and traffic operations for the intersection of SW 137 Avenue and SW 152 Street, the following are recommended:

- Lengthen the westbound double left-turn lanes to 475 ft each.
- Lengthen the southbound double left-turn lanes to 300 ft each.
- Channelizing the westbound and southbound right-turn lanes for free flow operations.
- Extend the merge lane on the west leg receiving lanes to provide right-turn lane to the shopping plaza.
- Retiming/optimizing of the existing signal while maintaining cycle length for both the AM and PM peak hours. Also, coordinating with the downstream signal at the entrance of the shopping plaza (ID# 6155).
- Installing lane control (R3-8) signs for all approaches.
- Resurfacing the intersection.
- Refurbishing of pavement markings using thermoplastic painting.

A conceptual vision of the proposed roadway improvements is exhibited in *Figure 21*.

24-hr Approach Counts

Turning Movement Counts (TMC)

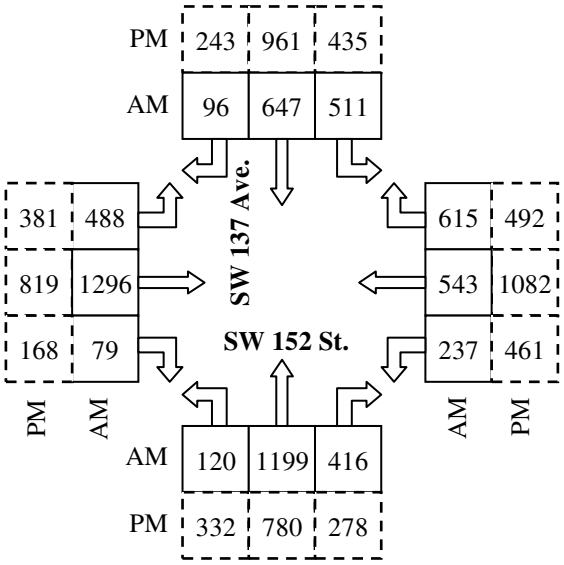

Figure 19: Traffic Data – *SW 137 Avenue and SW 152 Street*

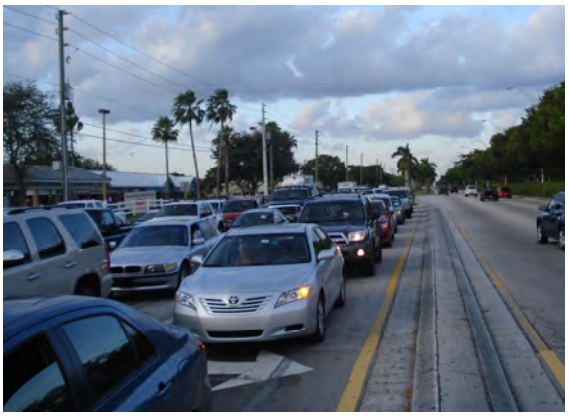

Southbound approach: Large number of left-turn and through traffic.

Westbound (and southbound) approach: Through traffic block the left-turn lanes.

Eastbound approach: Tire skid marks.

Westbound approach: Red light running.

Westbound receiving lanes: Long queues blocking the intersection due to the signal at the shopping plaza entrance.

Southbound approach: Faded markings and deteriorated pavement conditions.

Figure 20: Field Review – *SW 137 Avenue and SW 152 Street*

Figure 21: Conceptual Plan – *SW 137 Avenue and SW 152 Street*

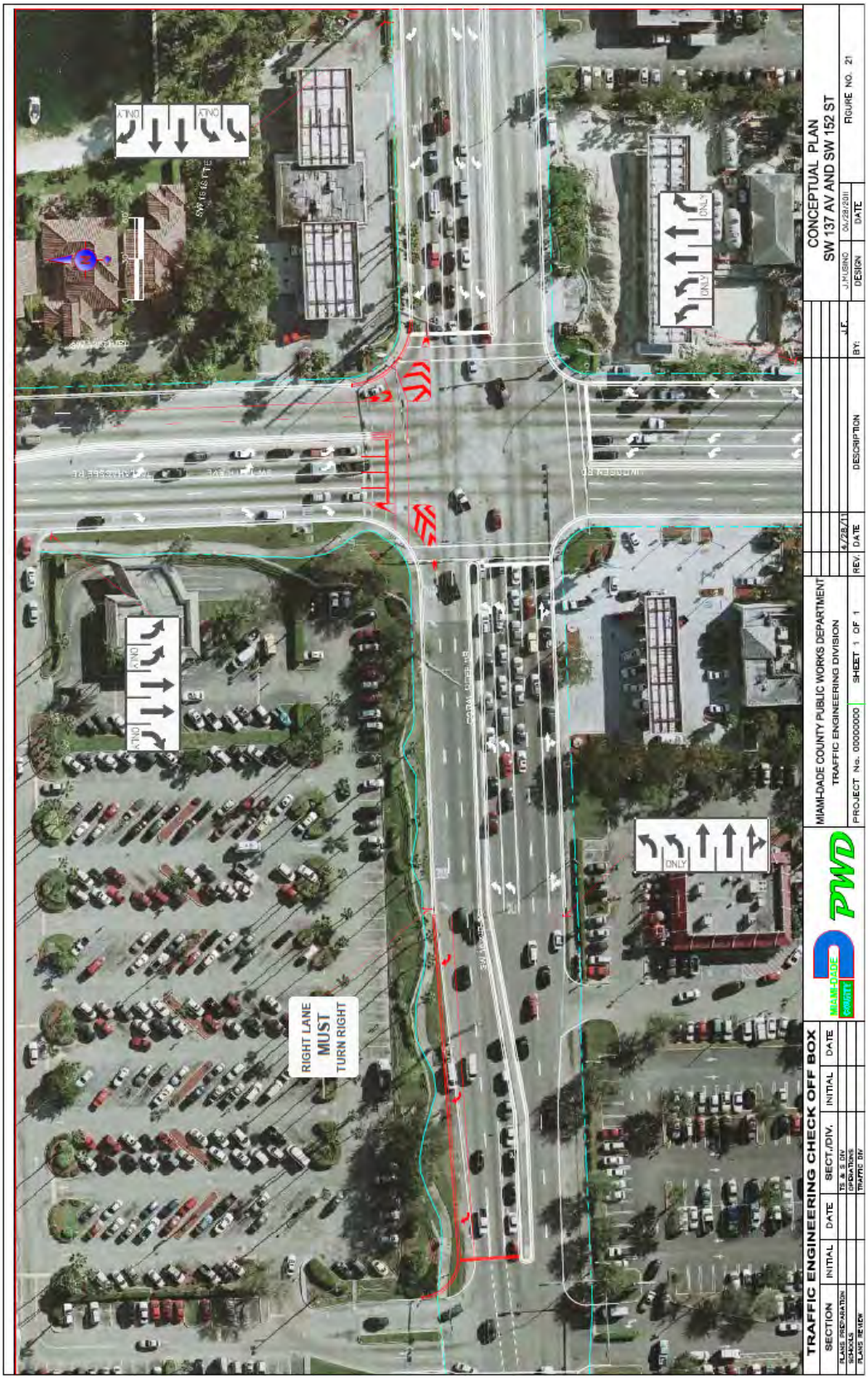

3.6. NW 107 Avenue and NW 12 Street

3.6.1. Site Description

This intersection is a signalized four legged intersection located in the northwest part of unincorporated Miami Dade County with one corner in the City of Doral. NW 107 Avenue is a six lane urban arterial divided by a raised median that runs north-south, and NW 12 Street is a six lane major collector divided by a raised median that runs east-west.

3.6.2. Safety Conditions and Analysis

The intersection of NW 107 Avenue and NW 12 Street is ranked number 6 in our high crash locations list. A review of the hard copy police reports for the years 2006 through 2008 was performed. During the three-year analysis period 157 relevant crashes occurred at the intersection. The analysis indicated that the average number of crashes per year is 52. The crash summaries, crash statistics and collision diagrams for the intersection are documented in *Appendix A*.

Based on the analysis of crash records for this intersection, the predominant types of crashes are shown in *Figure 22*.

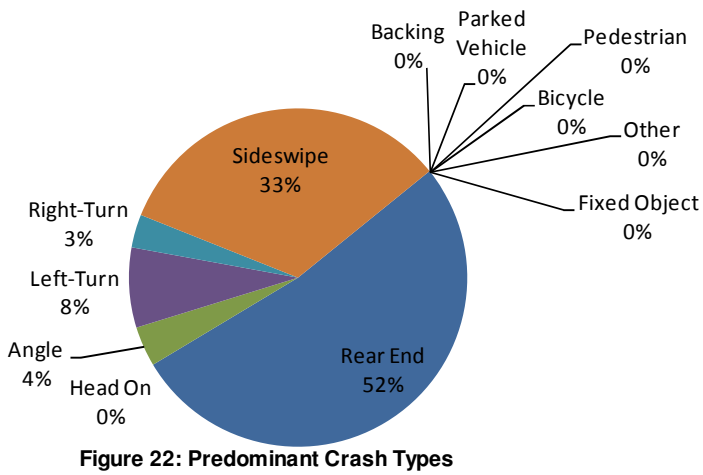

Figure 22: Predominant Crash Types
NW 107 AVE & NW 12 ST

Calculated intersection mean crash per year were compared to the average Miami-Dade Crash Rate for County corridors to assess the safety conditions at the study intersection in relation to other roadways with similar traffic and geometric characteristics. This study is based on the 2007 FDOT's "Expected Value Analysis." *Table 16* illustrates the expected accident volume analysis of this intersection as well as the safety ratios and the confidence levels during the analysis period.

Based on a regression growth of 2% from the 2006 entering volume, the calculated safety ratios for the years 2006, 2007, and 2008 were 1.527, 2.097, and 1.349, respectively. The safety ratio for the three years averaged 1.658. Also, results of confidence level indicated that this intersection has been a high crash location during the three years with a confidence level higher than 99.95%.

From this analysis, it was determined that rear end and sideswipe collisions presented abnormal crash patterns that exceed the threshold limits for the 95th percentile and 90th percentile confidence level. Those results indicate that these types of collisions were abnormally high during the period of 2006 through 2008. A detailed review of the abnormal crashes as well as probable countermeasures is presented in *Table 17*.

Table 16 – Crash Analysis – NW 107 Avenue and NW 12 Street

NW 107 Avenue & NW 12 Street

(6 Lane x 6 Lane, Signalized, With Turn Lanes, 4 Leg Intersection -Table 36) - URBAN Spot

	TYPE OF CRASH	NUMBER OF CRASHES YEAR 2006	2007	2008	3 YEAR TOTAL CRASHE	% of Total	MEAN Accidents per Year	EXPECTED ANNUAL CRASH VALUE MEAN	90th Percentile	95th Percentile	ABNORMALLY HIGH CRASHES Mean	90th Percentil	95th Percentil
COLLISION TYPE	Rear End	27	35	20	82	26%	27.33	7.80	17.12	18.90	X	X	X
	Head On	0	0	0	0	0%	0.00	0.31	0.91	1.03			
	Angle	2	1	3	6	2%	2.00	4.11	8.06	8.82			
	Left Turn	2	4	6	12	3%	4.00	3.20	6.52	7.16	X		
	Right Turn	0	2	3	5	1%	1.67	0.87	1.88	2.07	X		
	Sideswipe	17	24	11	52	11%	17.33	2.98	6.83	7.57	X	X	X
	Backed Into	0	0	0	0	0%	0.00	0.44	1.26	1.42			
	Coll. w/ Parked Car	0	0	0	0	0%	0.00	0.09	0.41	0.48			
	Coll. w/ Pedestrian	0	0	0	0	0%	0.00	0.44	1.34	1.51			
	Coll. w/ Bicycle	0	0	0	0	0%	0.00	0.22	0.67	0.76			
	Fixed Object	0	0	0	0	0%	0.00	0.62	1.52	1.69			
	Ran Off Road	0	0	0	0	0%	0.00	0.00	0.00	0.00			
	Overtuned	0	0	0	0	0%	0.00	0.07	0.29	0.34			
	Other	0	0	0	0	0%	0.00	5.09	11.59	12.84			
	Total Crashes	48	66	43	157	24%	52.33	26.24	47.45	51.51	X	X	X
SEVERITY	PDO crashes	47	61	39	147	94%	49.00	14.33	26.64	28.99	X	X	X
	Fatal crashes	0	0	0	0	0%	0.00	0.20	0.85	0.97			
	Injury crashes	1	5	4	10	6%	3.33	19.22	40.94	45.10			
LIGHT CONDITIONS	Day Light	37	48	33	118	75%	39.33	17.36	32.17	35.01	X	X	X
	Dusk	1	4	0	5	3%	1.67	0.64	1.46	1.62	X	X	X
	Dawn	0	0	2	2	1%	0.67	0.18	0.59	0.66	X	X	X
	Dark	10	14	8	32	20%	10.67	7.36	15.05	16.53	X		
	Unknown	0	0	0	0	0%	0.00	0.09	0.47	0.55			
SURFACE CONDITIONS	Dry	38	52	31	121	77%	40.33	22.04	41.61	45.35	X		
	Wet	4	10	7	21	13%	7.00	3.22	6.25	6.83	X	X	X
	Others	6	4	5	15	10%	5.00	0.36	0.96	1.07	X	X	X
MONTH OF A YEAR	January	3	2	1	6	4%	2.00	2.49	4.66	5.08			
	February	5	2	5	12	8%	4.00	1.91	4.01	4.41	X		
	March	6	8	1	15	10%	5.00	2.33	5.43	6.02	X		
	April	6	4	4	14	9%	4.67	1.89	4.46	4.95	X	X	
	May	1	7	5	13	8%	4.33	2.16	4.04	4.40	X	X	
	June	3	6	1	10	6%	3.33	1.93	4.00	4.39	X		
	July	5	2	3	10	6%	3.33	2.38	5.17	5.70	X		
	August	7	11	5	23	15%	7.67	2.51	4.97	5.44	X	X	X
	September	4	5	2	11	7%	3.67	1.60	3.13	3.42	X	X	X
	October	3	8	4	15	10%	5.00	2.13	4.00	4.35	X	X	X
	November	3	3	6	12	8%	4.00	1.98	4.35	4.81.	X		
	December	2	8	6	16	10%	5.33	2.31	4.78	5.26	X	X	X
DAY OF THE WEEK	Sunday	5	4	3	12	8%	4.00	3.60	7.06	7.73	X		
	Monday	5	10	4	19	12%	6.33	3.42	6.95	7.63	X		
	Tuesday	9	11	8	28	18%	9.33	3.71	6.93	7.54	X	X	X
	Wednesday	6	7	6	19	12%	6.33	4.02	7.66	8.35	X		
	Thursday	10	12	2	24	15%	8.00	4.36	8.22	8.97	X		
	Friday	8	7	7	22	14%	7.33	4.16	8.40	9.21	X		
	Saturday	5	14	13	32	21%	10.67	2.36	5.17	5.71	X	X	X
HOUR OF THE DAY	00:00-06:00	2	2	1	5	3%	1.67	2.20	4.63	5.10			
	06:00-09:00	2	6	4	12	8%	4.00	3.64	7.22	7.91	X		
	09:00-11:00	1	6	3	10	6%	3.33	2.04	4.45	4.91	X		
	11:00-13:00	8	10	6	24	15%	8.00	2.56	5.59	6.17	X	X	X
	13:00-15:00	7	7	5	19	12%	6.33	3.38	6.82	7.48	X		
	15:00-18:00	14	15	14	43	27%	14.33	5.09	9.37	10.19	X	X	X
	18:00-24:00	14	20	10	44	28%	14.67	6.71	13.41	14.69	X	X	

	YEAR 1	2	3	3-Year Average
Average Daily Traffic ADT *(Vehicles per Day)*	81,719	83,387	85,089	83,399
Florida Average Crash rate *(Crashes per Million Entering Vehicles)*	0.579	0.568	0.566	0.571
Traffic Base	29.828	30.436	31.057	30.440
Actual Crash Rate *(Crashes per Million Entering Vehicles)*	1.609	2.168	1.385	1.721
Critical Crash Rate *(Crashes per Million Entering Vehicles)*	1.054	1.034	1.026	1.038
Safety Ratio	**1.527**	**2.097**	**1.349**	**1.658**
High Crash Location??	***YES***	***YES***	***YES***	***YES***

$$Actual\ \ Crash\ \ Rate = \frac{A \times 1{,}000{,}000}{V}$$

Where:
A = Total number of crashes or number of crashes by type occurring in a 1 year period.
V = Average Annual Daily Traffic X 365

$$CriticalCrashRate = AVR + \frac{0.5}{TB} + TF\sqrt{\frac{AVR}{TB}}$$

Where:
AVR = Average Statewide Crash Rate for a particular type of intersection or roadway segment.
TB = Traffic Base
TF = Test Factor (z-value)
= 1.96 (assume 95% Confidence Level for RURAL areas)
= 3.29 (assume 99.95% Confidence Level for URBAN areas)

$$Traffic\ Base = \frac{Years \times ADT \times 365}{1{,}000{,}000}$$

$$Safety\ \ Ratio = \frac{Actual\ \ Crash\ \ Rate}{Critical\ \ Crash\ \ Rate}$$

Confidence Level (%)	Constant Z
68.30	1.00
86.60	1.50
90.00	1.64
95.00	1.96
95.50	2.00
98.80	2.50
99.00	2.58
99.70	3.00
99.95	3.29

Table 17 – Abnormal Crash Details & Countermeasures NW 107 Avenue and NW 12 Street

NW 107 Avenue & NW 12 Street

(6 Lane x 6 Lane, Signalized, With Turn Lanes, 4 Leg Intersection -Table 36) - URBAN Spot

			NUMBER OF CRASHES YEAR			3 YEAR TOTAL CRASHE	% of Total	MEAN Accidents per Year	Possible Cause(s)	Counter-measure(s)
			2006	2007	2008					
Rear End	Total Rear End Crashes		27	35	20	82	100%	27.33	(1)	1
	Lighting Conditions	Day Light	23	24	17	64	78%	21.33	(2)	2
		Dawn	0	3	1	4	5%	1.33	(4)	4
		Dark	4	8	2	14	17%	4.67	(5)	6
	Hours of Day	00:00 - 06:00	1	1	0	2	2%	0.67	(8)	
		06:00 - 09:00	2	6	2	10	12%	3.33		
		09:00 - 11:00	0	2	2	4	5%	1.33		
		11:00 - 13:00	6	6	2	14	17%	4.67		
		13:00 - 15:00	4	1	3	8	10%	2.67		
		15:00 - 18:00	6	6	7	19	23%	6.33		
		18:00 - 24:00	8	13	4	25	30%	8.33		
	Direction	North	11	11	5	27	33%	9.00		
		South	3	7	3	13	16%	4.33		
		East	6	11	9	26	32%	8.67		
		West	7	6	3	16	20%	5.33		
		Unknown	0	0	0	0	0%	0.00		

			NUMBER OF CRASHES YEAR			3 YEAR TOTAL CRASHE	% of Total	MEAN Accidents per Year	Possible Cause(s)	Counter-measure(s)
			2006	2007	2008					
Sideswipe (Overtake)	Total Sideswipe Crashes		17	24	11	52	100%	17.33	(16)	4
	Lighting Conditions	Day Light	12	20	8	40	77%	13.33	(17)	19
		Dawn	1	0	0	1	2%	0.33	(18)	21
		Dark	4	4	3	11	21%	3.67	(19)	22
	Hours of Day	00:00 - 06:00	1	0	0	1	2%	0.33	(20)	
		06:00 - 09:00	1	1	0	2	4%	0.67		
		09:00 - 11:00	0	3	1	4	8%	1.33		
		11:00 - 13:00	2	2	3	7	13%	2.33		
		13:00 - 15:00	3	4	0	7	13%	2.33		
		15:00 - 18:00	7	8	3	18	35%	6.00		
		18:00 - 24:00	3	6	4	13	25%	4.33		
	Direction	North	7	4	2	13	25%	4.33		
		South	6	4	4	14	27%	4.67		
		East	1	5	4	10	19%	3.33		
		West	3	11	1	15	29%	5.00		
		Unknown	0	0	0	0	0%	0.00		

3.6.3. Traffic Operation Conditions and Analysis

In order to identify the traffic operation characteristics and safety relevant conflicts, field observations at NW 107 Avenue and NW 12 Street were performed on a typical weekday on October 28, 2010. A summary of the traffic data is presented in *Figure 23*, and the field review is presented in *Figure 24*.

This intersection has double left-turn bays for all approaches, and the northbound, southbound and eastbound approaches have exclusive right-turn lanes. The signal operation is protected for all left-turn approaches.

Long queues were observed for northbound left-turn with vehicles spilling back and blocking the through lane. Also, northbound vehicles were observed weaving.

Several eastbound vehicles were observed weaving and overtaking the right-of-way from the outside lane that becomes a right turn only to the inside through lanes, bypassing the long queue. Also, weaving was observed for westbound traffic.

Several conflicts were observed between the eastbound right turns and traffic along the auxiliary lane for the SR-836/Dolphin Expressway on-ramp during the PM peak. Also, several conflicts between eastbound right turns and southbound through traffic

It was observed that multiple vehicles weaving south of the intersection use to bypass southbound queues from the auxiliary lane for the SR-836/Dolphin Expressway on-ramp along NW 107 Avenue.

It was noticed that no intersection lane control signs were provided for southbound and eastbound traffic. Also, red light running was observed at the intersection.

3.6.4. Recommendation

Based on the safety analysis, field observations and traffic operations for the intersection of NW 107 Avenue and NW 12 Street, the following are recommended:

- Lengthen the northbound double left-turn lanes to 250 ft. each.
- Lengthen the eastbound double left-turn lanes to 300 ft. each.
- Retiming/optimizing of the existing signal while maintaining cycle length for both the AM and PM peak hours.
- Installing lane control (R3-8) signs for all approaches.
- Installing additional post mounted No U-Turn (R3-4) signs for all approaches.
- Providing ADA approved pedestrian ramps at all corners.
- Resurfacing the intersection.
- Refurbishing of pavement markings using thermoplastic painting.

A conceptual vision of the proposed roadway improvements is exhibited in *Figure 25*.

24-hr Approach Counts

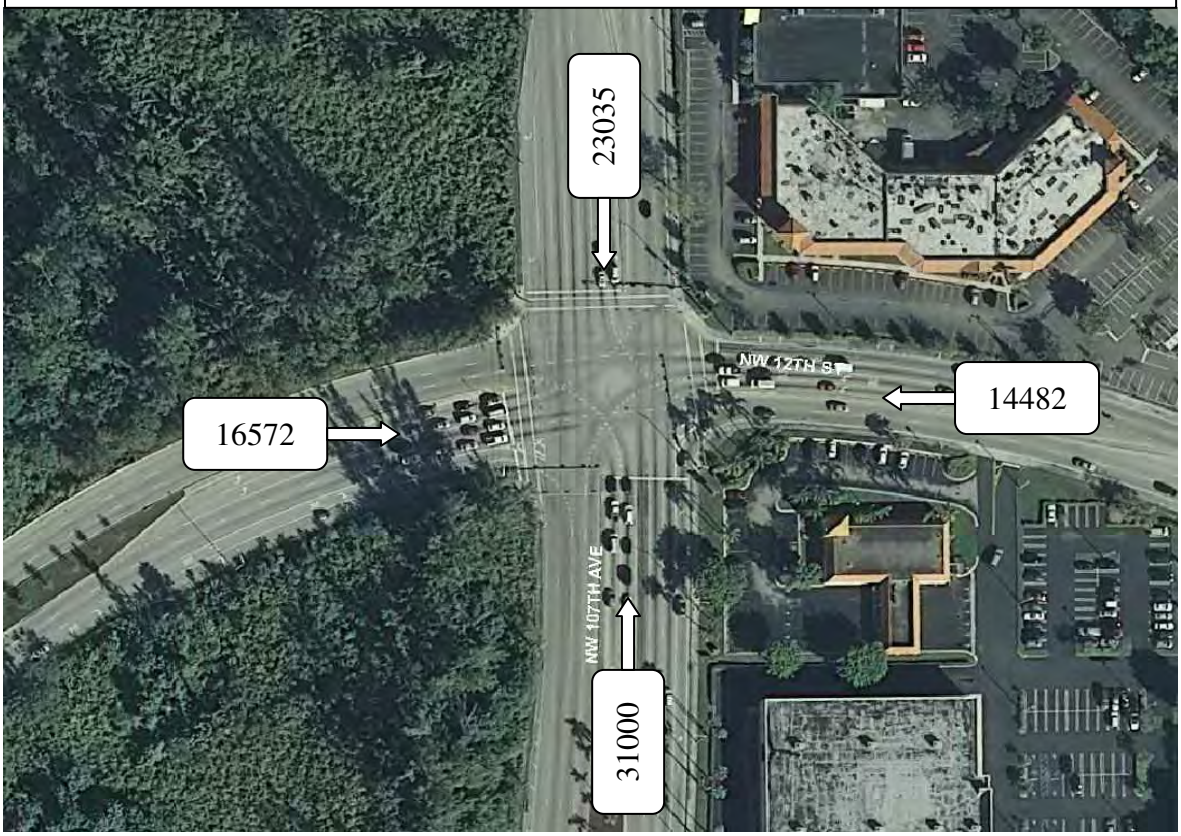

Turning Movement Counts (TMC)

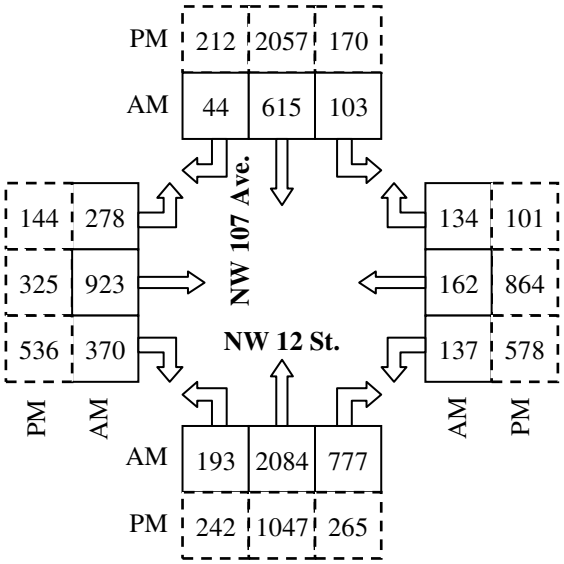

Figure 23: Traffic Data – *NW 107 Avenue and NW 12 Street*

Northbound approach: Large number of left-turn vehicles.

Westbound approach: Weaving to access the left-turn lanes.

Southbound receiving lanes: No pavement markings to show the right-turn lane.

Eastbound approach: No lane control signs.

Southbound approach: No U-Turn sign is faraway that may not be seen clearly.

Faded pavement markings and no ADA approved pedestrian ramps.

Figure 24: Field Review – *NW 107 Avenue and NW 12 Street*

Figure 25: Conceptual Plan – *NW 107 Avenue and NW 12 Street*

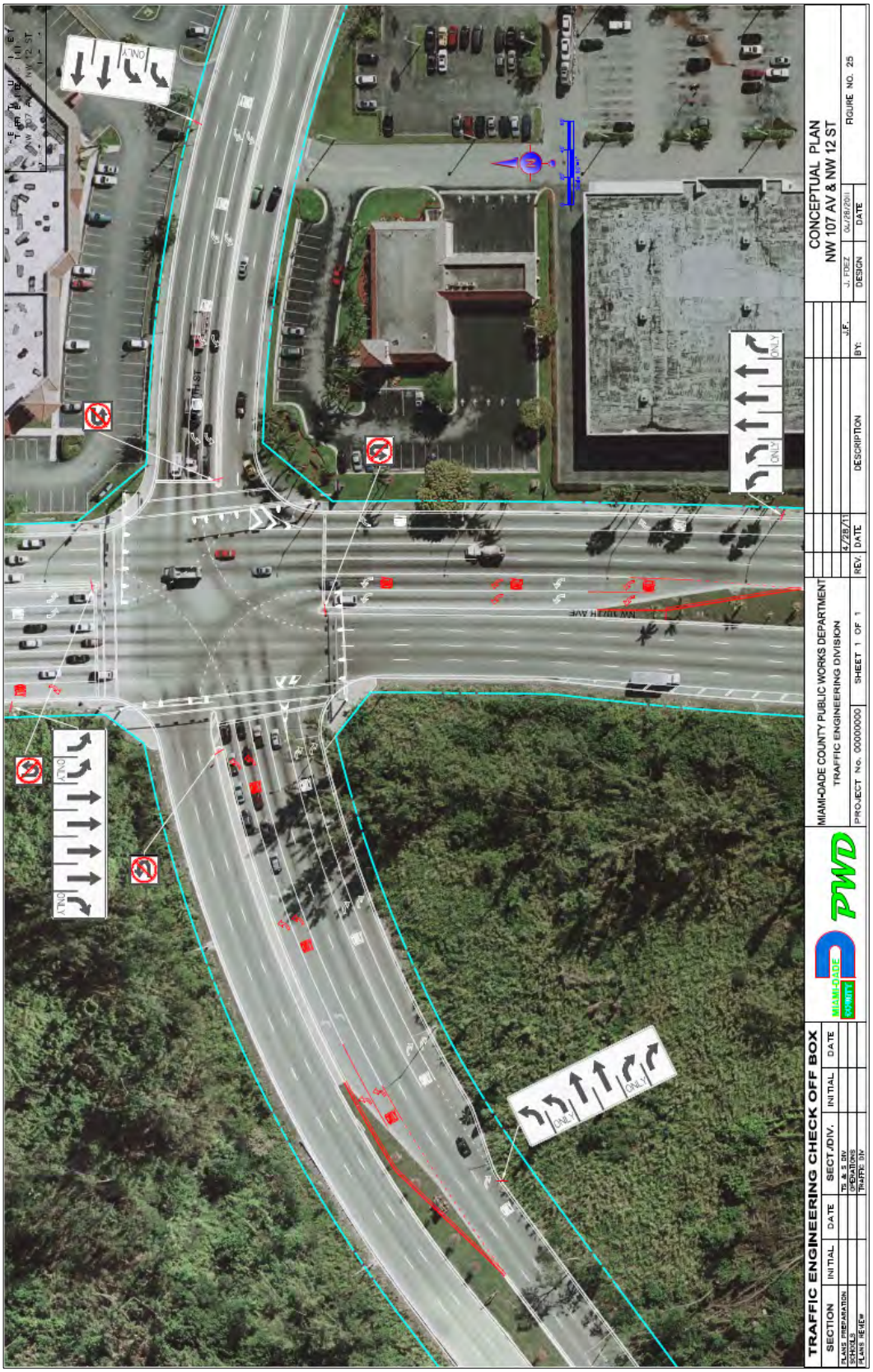

3.7. SW 152 Avenue and SW 72 Street

3.7.1. Site Description

This intersection is a signalized four legged intersection located in the unincorporated area of southwest Miami Dade County. SW 152 Avenue is a four lane urban arterial divided by a raised median that runs north-south, and SW 72 Street is a four lane urban arterial divided by a raised median that runs east-west.

3.7.2. Safety Conditions and Analysis

The intersection of SW 152 Avenue and SW 72 Street is ranked number 7 in our high crash locations list. A review of the hard copy police reports for the year 2006 through 2008 was performed. During the three-year analysis period, 90 relevant crashes occurred at the intersection. The analysis indicated that the average number of crashes per year is 30. The crash summaries, crash statistics and collision diagrams for the intersection are documented in *Appendix A*.

Based on the analysis of crash records for this intersection, the predominant types of crashes are shown in *Figure 26.*

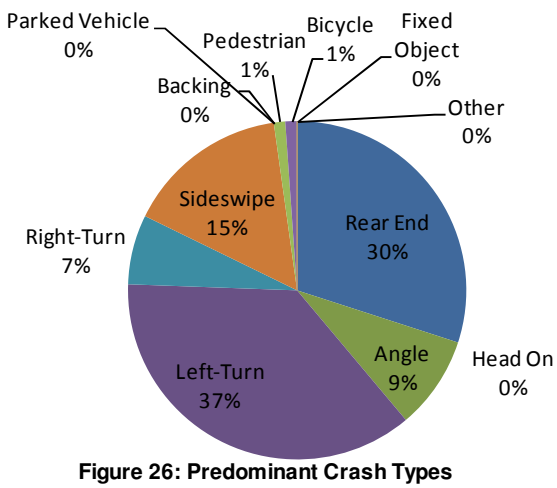

Figure 26: Predominant Crash Types SW 152 AVE & SW 72 ST

Calculated intersection mean crash per year were compared to the average Miami-Dade Crash Rate for County corridors to assess the safety conditions at the study intersection in relation to other roadways with similar traffic and geometric characteristics. This study is based on the 2007 FDOT's "Expected Value Analysis." *Table 18* illustrates the expected accident volume analysis of this intersection as well as the safety ratios and the confidence levels during the analysis period.

Based on a regression growth of 2% from the 2006 entering volume, the calculated safety ratios for the years 2006, 2007, and 2008 were 2.398, 2.212, and 1.720, respectively. The safety ratio for the three years averaged 2.110. Also, results of confidence level indicated that this intersection has been a high crash location during the three years with a confidence level higher than 99.95%.

From this analysis, it was determined that left-turn, right-turn and sideswipe collisions presented abnormal crash patterns that exceed the threshold limits for the 95th percentile and 90th percentile confidence level. Those results indicate that these types of collisions were abnormally high during the period of 2006 through 2008. A detailed review of the abnormal crashes as well as probable countermeasures is presented in *Table 19.*

Table 18 – Crash Analysis – SW 152 Avenue and SW 72 Street

SW 152 Avenue & SW 72 Street

(4 Lane x 4 Lane, Signalized, With Turn Lanes, 4 Leg Intersection -Table 28) - URBAN Spot

	TYPE OF CRASH	NUMBER OF CRASHES YEAR 2006	2007	2008	3 YEAR TOTAL CRASHE	% of Total	MEAN Accidents per Year	EXPECTED ANNUAL CRASH VALUE MEAN	90th Percentile	95th Percentile	ABNORMALLY HIGH CRASHES Mean	90th Percentil	95th Percentil
COLLISION TYPE	Rear End	12	11	4	27	15%	9.00	5.70	16.96	19.12	X		
	Head On	0	0	0	0	0%	0.00	0.33	1.02	1.15			
	Angle	4	2	2	8	3%	2.67	3.05	7.08	7.85			
	Left Turn	12	13	8	33	14%	11.00	1.67	4.02	4.47	X	X	X
	Right Turn	3	1	2	6	2%	2.00	0.33	1.25	1.42	X	X	X
	Sideswipe	2	5	7	14	6%	4.67	1.60	4.64	5.22	X	X	
	Backed Into	0	0	0	0	0%	0.00	0.17	0.56	0.63			
	Coll. w/ Parked Car	0	0	0	0	0%	0.00	0.10	0.51	0.59			
	Coll. w/ Pedestrian	0	0	1	1	0%	0.33	0.28	1.04	1.19	X		
	Coll. w/ Bicycle	1	0	0	1	0%	0.33	0.09	0.33	0.38	X	X	
	Fixed Object	0	0	0	0	0%	0.00	0.03	0.21	0.24			
	Ran Off Road	0	0	0	0	0%	0.00	0.00	0.00	0.00			
	Overtuned	0	0	0	0	0%	0.00	0.03	0.21	0.24			
	Other	0	0	0	0	0%	0.00	3.70	8.83	9.82			
	Total Crashes	34	32	24	90	24%	30.00	17.77	40.96	45.39	X		
SEVERITY	PDO crashes	30	27	23	80	89%	26.67	9.93	22.30	24.67	X	X	X
	Fatal crashes	0	0	0	0	0%	0.00	0.05	0.26	0.29			
	Injury crashes	4	5	1	10	11%	3.33	13.14	33.08	36.90			
LIGHT CONDITIONS	Day Light	18	19	16	53	59%	17.67	12.40	29.18	32.39	X		
	Dusk	0	1	1	2	2%	0.67	0.28	0.87	0.98	X		
	Dawn	0	0	0	0	0%	0.00	0.17	0.56	0.63			
	Dark	16	12	7	35	39%	11.67	4.56	10.53	11.68	X	X	
	Unknown	0	0	0	0	0%	0.00	0.35	1.05	1.18			
SURFACE CONDITIONS	Dry	23	28	22	73	81%	24.33	15.30	34.45	38.12	X		
	Wet	2	4	2	8	9%	2.67	2.10	6.02	6.76	X		
	Others	9	0	0	9	10%	3.00	0.37	1.10	1.24	X	X	X
MONTH OF A YEAR	January	1	3	2	6	7%	2.00	1.42	3.33	3.69	X		
	February	4	2	1	7	8%	2.33	1.42	3.53	3.93	X		
	March	2	5	2	9	10%	3.00	1.67	4.12	4.59	X		
	April	3	7	2	12	13%	4.00	1.30	3.21	3.57	X	X	X
	May	3	4	1	8	9%	2.67	1.74	4.46	4.99	X		
	June	4	2	1	7	8%	2.33	1.38	3.49	3.90	X		
	July	0	3	4	7	8%	2.33	1.35	3.22	3.58	X		
	August	1	4	1	6	7%	2.00	1.56	3.99	4.46	X		
	September	7	1	1	9	10%	3.00	1.46	3.73	4.16	X		
	October	3	1	1	5	6%	1.67	1.47	3.59	4.00	X		
	November	2	0	5	7	8%	2.33	1.39	3.53	3.94	X		
	December	4	0	3	7	8%	2.33	1.61	4.43	4.97	X		
DAY OF THE WEEK	Sunday	2	2	2	6	7%	2.00	1.46	3.47	3.85	X		
	Monday	2	7	1	10	11%	3.33	2.70	6.42	7.13	X		
	Tuesday	7	1	3	11	12%	3.67	2.49	6.18	6.88	X		
	Wednesday	6	6	8	20	22%	6.67	2.56	5.84	6.47	X	X	X
	Thursday	4	7	3	14	16%	4.67	2.88	7.20	8.03	X		
	Friday	6	7	3	16	18%	5.33	3.07	7.50	8.35	X		
	Saturday	7	2	3	12	13%	4.00	2.61	6.40	7.13	X		
HOUR OF THE DAY	00:00-06:00	2	2	1	5	6%	1.67	1.70	3.39	3.71			
	06:00-09:00	2	4	3	9	10%	3.00	1.98	5.12	5.72	X		
	09:00-11:00	1	1	1	3	3%	1.00	1.72	4.23	4.71			
	11:00-13:00	2	0	1	3	3%	1.00	2.40	6.30	7.05			
	13:00-15:00	6	2	3	11	12%	3.67	1.95	5.32	5.96	X		
	15:00-18:00	7	9	4	20	22%	6.67	3.58	7.81	8.62	X		
	18:00-24:00	14	14	11	39	43%	13.00	4.42	10.63	11.82	X	X	X

	YEAR 1	2	3	3-Year Average
Average Daily Traffic ADT *(Vehicles per Day)*	37,651	38,419	39,203	38,424
Florida Average Crash rate *(Crashes per Million Entering Vehicles)*	0.420	0.424	0.394	0.413
Traffic Base	13.742	14.023	14.309	14.025
Actual Crash Rate *(Crashes per Million Entering Vehicles)*	2.474	2.282	1.677	2.144
Critical Crash Rate *(Crashes per Million Entering Vehicles)*	1.032	1.032	0.975	1.013
Safety Ratio	**2.398**	**2.212**	**1.720**	**2.110**
High Crash Location??	***YES***	***YES***	***YES***	***YES***

$$Actual\ \ Crash\ \ Rate = \frac{A \times 1{,}000{,}000}{V}$$

Where:
A = Total number of crashes or number of crashes by type occurring in a 1 year period.
V = Average Annual Daily Traffic X 365

$$CriticalCrashRate = AVR + \frac{0.5}{TB} + TF\sqrt{\frac{AVR}{TB}}$$

Where:
AVR = Average Statewide Crash Rate for a particular type of intersection or roadway segment.
TB = Traffic Base
TF = Test Factor (z-value)
= *1.96 (assume 95% Confidence Level for RURAL areas)*
= *3.29 (assume 99.95% Confidence Level for URBAN areas)*

$$Traffic\ Base = \frac{Years \times ADT \times 365}{1{,}000{,}000}$$

$$Safety\ \ Ratio = \frac{Actual\ \ Crash\ \ Rate}{Critical\ \ Crash\ \ Rate}$$

Confidence Level (%)	Constant Z
68.30	1.00
86.60	1.50
90.00	1.64
95.00	1.96
95.50	2.00
98.80	2.50
99.00	2.58
99.70	3.00
99.95	3.29

Table 19 – Abnormal Crash Details & Countermeasures SW 152 Avenue and SW 72 Street

SW 152 Avenue & SW 72 Street

(4 Lane x 4 Lane, Signalized, With Turn Lanes, 4 Leg Intersection -Table 28) - URBAN Spot

			NUMBER OF CRASHES YEAR 2006	2007	2008	3 YEAR TOTAL CRASHES	% of Total	MEAN Accidents per Year	Possible Cause(s)	Counter-measure(s)
Left Turn	Total Left Turn Crashes		12	13	8	33	100%	11.00	(9)	9
	Lighting Conditions	Day Light	8	8	5	21	64%	7.00	(13)	13
		Dawn	0	0	3	3	9%	1.00	(19)	16
		Dark	4	5	0	9	27%	3.00		
	Hours of Day	00:00 - 06:00	0	0	0	0	0%	0.00		
		06:00 - 09:00	1	0	2	3	9%	1.00		
		09:00 - 11:00	0	1	1	2	6%	0.67		
		11:00 - 13:00	1	0	1	2	6%	0.67		
		13:00 - 15:00	4	0	1	5	15%	1.67		
		15:00 - 18:00	2	6	0	8	24%	2.67		
		18:00 - 24:00	4	6	3	13	39%	4.33		
	Direction	NB → WB	2	1	2	5	15%	1.67		
		WB → SB	5	7	3	15	45%	5.00		
		SB → EB	1	0	1	2	6%	0.67		
		EB → NB	4	5	2	11	33%	3.67		
		Unknown	0	0	0	0	0%	0.00		

			NUMBER OF CRASHES YEAR 2006	2007	2008	3 YEAR TOTAL CRASHES	% of Total	MEAN Accidents per Year	Possible Cause(s)	Counter-measure(s)
Right Turn	Total Right Turn Crashes		3	1	2	6	100%	2.00	(1)	9
	Lighting Conditions	Day Light	1	1	1	3	50%	1.00	(8)	21
		Dawn	0	0	0	0	0%	0.00	(9)	
		Dark	2	0	1	3	50%	1.00	(16)	
	Hours of Day	00:00 - 06:00	0	0	0	0	0%	0.00		
		06:00 - 09:00	0	1	0	1	17%	0.33		
		09:00 - 11:00	0	0	0	0	0%	0.00		
		11:00 - 13:00	1	0	0	1	17%	0.33		
		13:00 - 15:00	0	0	0	0	0%	0.00		
		15:00 - 18:00	1	0	0	1	17%	0.33		
		18:00 - 24:00	1	0	2	3	50%	1.00		
	Direction	NB→EB	1	1	1	3	50%	1.00		
		EB→SB	1	0	0	1	17%	0.33		
		WB→NB	1	0	1	2	33%	0.67		
		SB→WB	0	0	0	0	0%	0.00		
		Unknown	0	0	0	0	0%	0.00		

			NUMBER OF CRASHES YEAR 2006	2007	2008	3 YEAR TOTAL CRASHES	% of Total	MEAN Accidents per Year	Possible Cause(s)	Counter-measure(s)
Sideswipe (Overtake)	Total Sideswipe Crashes		2	5	7	14	100%	4.67	(8)	5
	Lighting Conditions	Day Light	0	2	5	7	50%	2.33	(18)	19
		Dawn	0	0	0	0	0%	0.00	(21)	
		Dark	2	3	2	7	50%	2.33		
	Hours of Day	00:00 - 06:00	0	1	1	2	14%	0.67		
		06:00 - 09:00	0	1	0	1	7%	0.33		
		09:00 - 11:00	0	0	0	0	0%	0.00		
		11:00 - 13:00	0	0	0	0	0%	0.00		
		13:00 - 15:00	0	0	0	0	0%	0.00		
		15:00 - 18:00	1	0	1	2	14%	0.67		
		18:00 - 24:00	1	3	5	9	64%	3.00		
	Direction	North	0	3	2	5	36%	1.67		
		South	0	1	1	2	14%	0.67		
		East	2	1	0	3	21%	1.00		
		West	0	0	4	4	29%	1.33		
		Unknown	0	0	0	0	0%	0.00		

3.7.3. Traffic Operation Conditions and Analysis

In order to identify the traffic operation characteristics and safety relevant conflicts, field observations at SW 152 Avenue and SW 72 Street were performed on a typical weekday on November 15, 2010. A summary of the traffic data is presented in *Figure 27*, and the field review is presented in *Figure 28*.

This intersection has single left-turn bays for all approaches. The signal operation is protected/permissive for all approaches left-turn traffic.

The gas station and Westlake Plaza located along the south side of SW 72 Street of this intersection presents many consecutive driveways that generate potential conflicts with the other movements.

The west leg has a median opening with a westbound left-turn lane 130 feet from the intersection. Several conflicts between eastbound traffic and vehicles entering and existing from that driveway were observed.

This intersection presents a large offset alignment between eastbound and westbound left-turn lanes. Although this intersection allows U-turns, it was perceived that potential conflicts between those vehicles ad through traffic could occur especially during the peak period.

It was noticed that the number of left-turn vehicles sometimes exceeds the storage capacity of the turn bays for eastbound, westbound and northbound approaches.

Red light running was observed at the intersection.

3.7.4. Recommendations

Based on the safety analysis, field observations and traffic operations for the intersection of SW 152 Avenue and SW 72 Street, the following is recommended:

- Realignment of the eastbound/westbound left-turn lanes to reduce the offset and line-up with the opposite left-turn lane.
- Closing the median opening on the west leg, and lengthen the eastbound left-turn lane to 200 ft. Also, provide a westbound left-turn bay at the second median opening.
- Lengthen the westbound left-turn lane to approximately 400 ft.
- Lengthen the northbound left-turn lane to approximately 200 ft.
- Improve the turn radius at the northeast and southeast corners.
- Retiming/optimizing of the existing signal while maintaining cycle length for both the AM and PM peak hours.
- Installing “No U-Turn” (R3-4) signs for eastbound/westbound approaches.
- Resurfacing the intersection.
- Refurbishing of pavement markings using thermoplastic painting.

A conceptual vision of the proposed roadway improvements is exhibited in *Figure 29*.

24-hr Approach Counts

Turning Movement Counts (TMC)

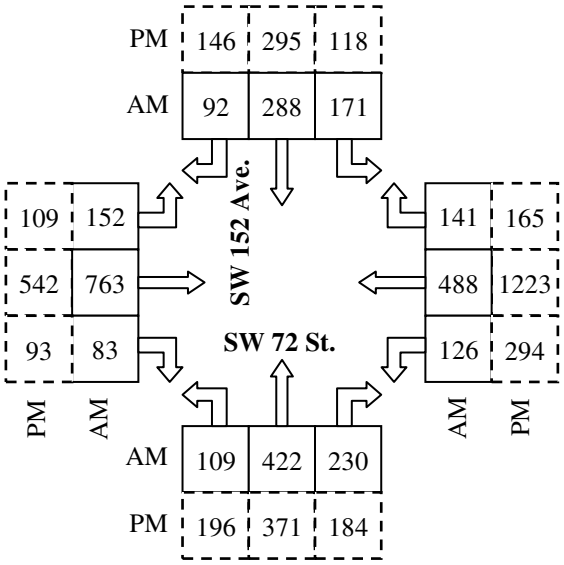

Figure 27: Traffic Data – *SW 152 Avenue and SW 72 Street*

Eastbound: many driveways on the south side of SW 72 Street.

Eastbound/Westbound: Left-turn lanes are not aligned to reduce the offset.

Northwest corner: Damaged pedestrian sign.

Northeast corner: Sight distance issue and tight turn radius.

Eastbound approach: Short left-turn bay.

Faded pavement markings and uneven pavement patches.

Figure 28: Field Review – *SW 152 Avenue and SW 72 Street*

Figure 29: Conceptual Plan – *SW 152 Avenue and SW 72 Street*

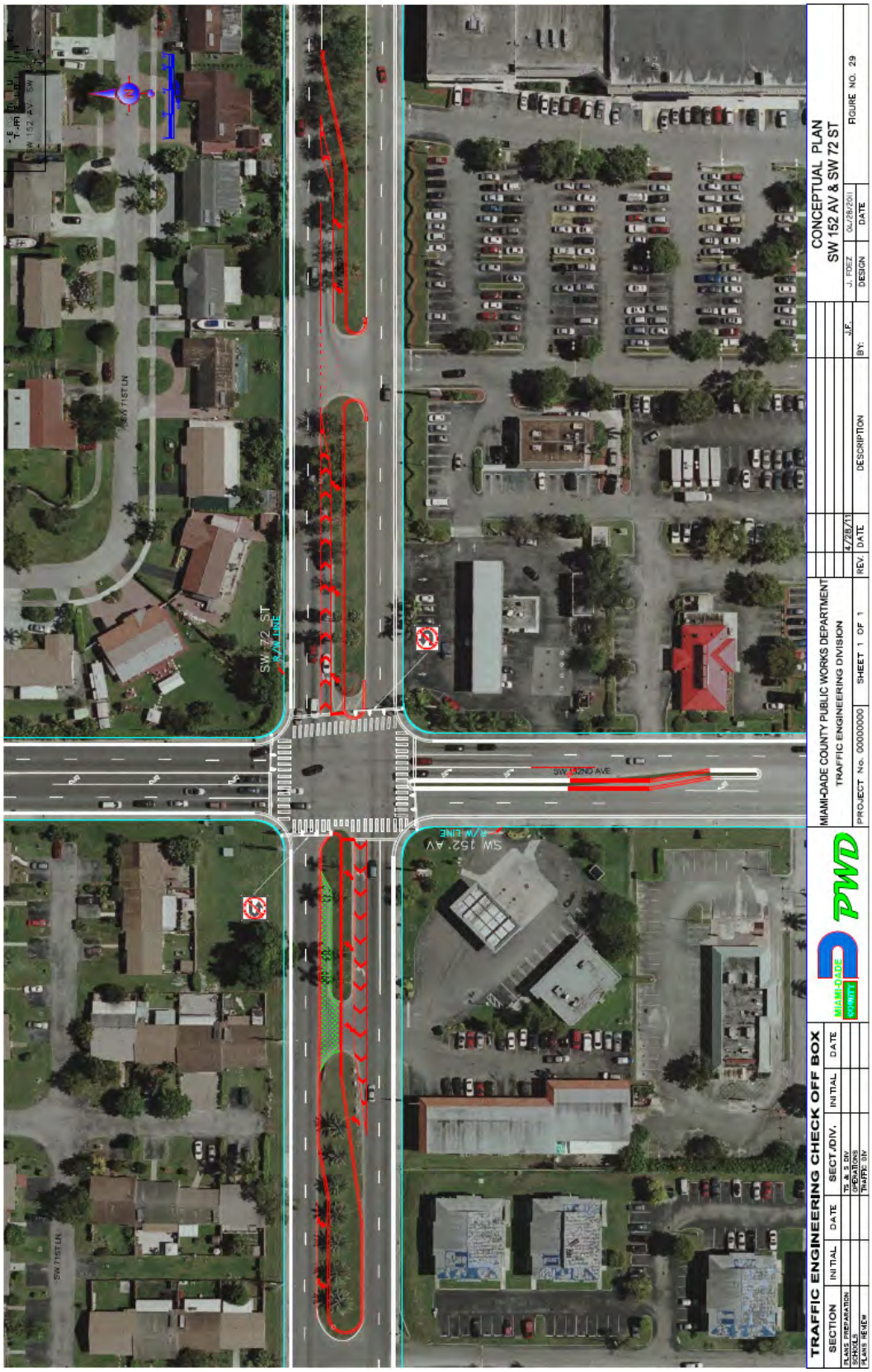

3.8. NW 79 Avenue and NW 36 Street

3.8.1. Site Description

This intersection is a signalized four legged intersection located in the northwest part of Miami Dade County in the City of Doral. NW 79 Avenue is a four lane collector divided by a paved median that runs north-south, and NW 36 Street is a six lane urban arterial divided by a raised median that runs east-west.

3.8.2. Safety Conditions and Analysis

The intersection of NW 79 Avenue and NW 36 Street is ranked number 8 in our high crash locations list. A review of the hard copy police reports for the year 2006 through 2008 was performed. During the three-year analysis period, 152 relevant crashes occurred at the intersection. The analysis indicated that the average number of crashes per year is 51. The crash summaries, crash statistics and collision diagrams for the intersection are documented in *Appendix A*.

Based on the analysis of crash records for this intersection, the predominant types of crashes are shown in *Figure 30.*

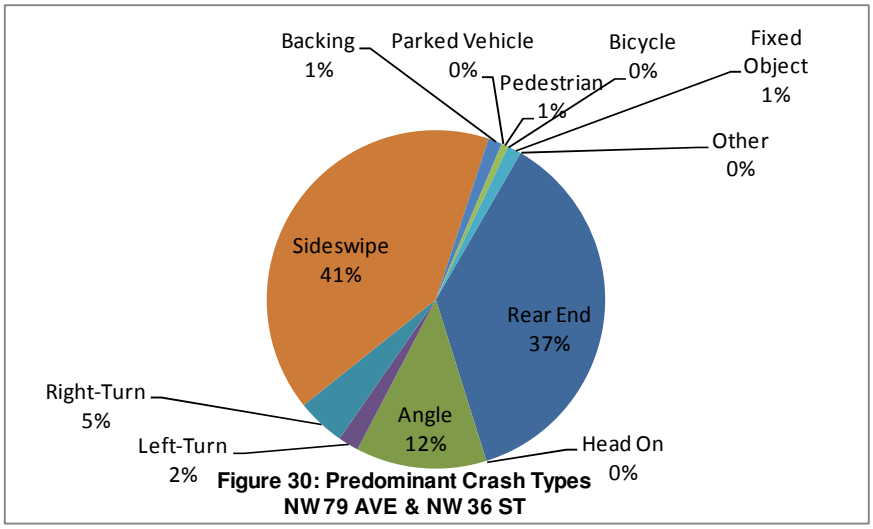

Figure 30: Predominant Crash Types NW 79 AVE & NW 36 ST

Calculated intersection mean crash per year were compared to the average Miami-Dade Crash Rate for County corridors to assess the safety conditions at the study intersection in relation to other roadways with similar traffic and geometric characteristics. This study is based on the 2007 FDOT's "Expected Value Analysis." *Table 20* illustrates the expected accident volume analysis of this intersection as well as the safety ratios and the confidence levels during the analysis period.

Based on a regression growth of 2% from the 2006 entering volume, the calculated safety ratios for the years 2006, 2007, and 2008 were 2.145, 2.189, and 2.568, respectively. The safety ratio for the three years averaged 2.301. Also, results of confidence level indicated that this intersection has been a high crash location during the three years with a confidence level higher than 99.95%.

From this analysis, it was determined that rear end, right-turn and sideswipe collisions presented abnormal crash patterns that exceed the threshold limits for the 95th percentile and 90th percentile confidence level. Those results indicate that these types of collisions were abnormally high during the period of 2006 through 2008. A detailed review of the abnormal crashes as well as probable countermeasures is presented in *Table 21*.

Table 20 – Crash Analysis – NW 79 Avenue and NW 36 Street

NW 79 Avenue & NW 36 Street

(6 Lane x 4 Lane, Signalized, With Turn Lanes, 4 Leg Intersection -Table 35) - URBAN Spot

	TYPE OF CRASH	NUMBER OF CRASHES YEAR 2006	2007	2008	3 YEAR TOTAL CRASHE	% of Total	MEAN Accidents per Year	EXPECTED ANNUAL CRASH VALUE MEAN	90th Percentile	95th Percentile	ABNORMALLY HIGH CRASHES Mean	90th Percentil	95th Percentil
COLLISION TYPE	Rear End	19	18	19	56	18%	18.67	8.68	17.26	18.90	X	X	
	Head On	0	0	0	0	0%	0.00	0.60	1.64	1.84			
	Angle	2	6	11	19	5%	6.33	5.40	9.19	9.92	X		
	Left Turn	2	1	0	3	1%	1.00	3.00	6.13	6.73			
	Right Turn	3	3	1	7	1%	2.33	0.46	1.36	1.53	X	X	X
	Sideswipe	20	19	23	62	13%	20.67	2.58	4.92	5.37	X	X	X
	Backed Into	0	1	1	2	0%	0.67	0.28	0.84	0.94	X		
	Coll. w/ Parked Car	0	0	0	0	0%	0.00	0.12	0.57	0.65			
	Coll. w/ Pedestrian	0	0	1	1	0%	0.33	0.74	1.80	2.00			
	Coll. w/ Bicycle	0	0	0	0	0%	0.00	0.14	0.49	0.55			
	Fixed Object	1	0	1	2	0%	0.67	0.79	2.01	2.24			
	Ran Off Road	0	0	0	0	0%	0.00	0.01	0.11	0.13			
	Overtuned	0	0	0	0	0%	0.00	0.04	0.28	0.33			
	Other	0	0	0	0	0%	0.00	8.67	21.05	23.42			
	Total Crashes	47	48	57	152	23%	50.67	31.51	54.94	59.43	X		
SEVERITY	PDO crashes	45	45	56	146	96%	48.67	19.21	36.95	40.35	X	X	X
	Fatal crashes	0	0	0	0	0%	0.00	0.16	0.56	0.63			
	Injury crashes	2	3	1	6	4%	2.00	20.77	38.34	41.71			
LIGHT CONDITIONS	Day Light	36	36	45	117	77%	39.00	19.89	35.12	38.03	X	X	X
	Dusk	0	0	1	1	1%	0.33	0.61	1.43	1.58			
	Dawn	2	2	1	5	3%	1.67	0.38	1.03	1.16	X	X	X
	Dark	9	10	10	29	19%	9.67	10.22	18.94	20.61			
	Unknown	0	0	0	0	0%	0.00	0.41	1.15	1.30			
SURFACE CONDITIONS	Dry	35	41	47	123	81%	41.00	26.41	45.71	49.41	X		
	Wet	2	7	9	18	12%	6.00	4.41	8.78	9.62	X		
	Others	10	0	1	11	7%	3.67	0.69	1.88	2.11	X	X	X
MONTH OF A YEAR	January	7	5	5	17	11%	5.67	2.57	5.04	5.52	X	X	X
	February	8	3	6	17	11%	5.67	2.37	4.59	5.02	X	X	X
	March	5	5	4	14	9%	4.67	3.09	5.92	6.46	X		
	April	7	3	6	16	11%	5.33	2.57	5.30	5.82	X	X	
	May	0	4	6	10	7%	3.33	2.51.	4.81	5.25			
	June	0	3	5	8	5%	2.67	2.81	5.74	6.30			
	July	0	2	8	10	7%	3.33	2.60	4.96	5.42	X		
	August	3	3	5	11	7%	3.67	3.00	5.66	6.17	X		
	September	4	8	1	13	9%	4.33	2.48	4.92	5.39	X		
	October	2	5	3	10	7%	3.33	2.89	5.40	5.88	X		
	November	7	4	0	11	7%	3.67	2.41	4.85	5.32	X		
	December	4	3	8	15	10%	5.00	2.22	4.55	5.00	X	X	X
DAY OF THE WEEK	Sunday	0	0	2	2	1%	0.67	4.00	6.58	7.08			
	Monday	9	9	13	31	20%	10.33	4.62	9.23	10.11	X	X	X
	Tuesday	8	4	5	17	11%	5.67	4.46	7.81	8.46	X		
	Wednesday	10	9	7	26	17%	8.67	4.56	8.62	9.40	X	X	
	Thursday	12	5	9	26	17%	8.67	5.04	9.04	9.80	X		
	Friday	4	9	11	24	16%	8.00	4.86	9.39	10.26	X		
	Saturday	4	12	10	26	17%	8.67	3.98	8.10	8.89	X	X	
HOUR OF THE DAY	00:00-06:00	3	5	4	12	8%	4.00	3.79	8.65	9.58	X		
	06:00-09:00	4	6	7	17	11%	5.67	3.44	6.94	7.61	X		
	09:00-11:00	4	5	5	14	9%	4.67	2.58	5.30	5.82	X		
	11:00-13:00	5	4	7	16	11%	5.33	3.12	5.78	6.29	X		
	13:00-15:00	8	7	6	21	14%	7.00	3.57	6.32	6.85	X	X	X
	15:00-18:00	16	13	11	40	26%	13.33	6.38	11.52	12.50	X	X	X
	18:00-24:00	7	8	17	32	21%	10.67	8.60	15.51	16.83	X		

	YEAR 1	2	3	3-Year Average
Average Daily Traffic ADT *(Vehicles per Day)*	50,468	51,498	52,549	51,505
Florida Average Crash rate *(Crashes per Million Entering Vehicles)*	0.579	0.568	0.566	0.571
Traffic Base	18.421	18.797	19.180	18.799
Actual Crash Rate *(Crashes per Million Entering Vehicles)*	2.551	2.554	2.972	2.692
Critical Crash Rate *(Crashes per Million Entering Vehicles)*	1.189	1.167	1.157	1.171
Safety Ratio	**2.145**	**2.189**	**2.568**	**2.301**
High Crash Location??	***YES***	***YES***	***YES***	***YES***

$$Actual\ \ Crash\ \ Rate = \frac{A \times 1{,}000{,}000}{V}$$

Where:
A = Total number of crashes or number of crashes by type occurring in a 1 year period.
V = Average Annual Daily Traffic X 365

$$CriticalCrashRate = AVR + \frac{0.5}{TB} + TF\sqrt{\frac{AVR}{TB}}$$

Where:
AVR = Average Statewide Crash Rate for a particular type of intersection or roadway segment.
TB = Traffic Base
TF = Test Factor (z-value)
= *1.96 (assume 95% Confidence Level for RURAL areas)*
= *3.29 (assume 99.95% Confidence Level for URBAN areas)*

$$Traffic\ Base = \frac{Years \times ADT \times 365}{1{,}000{,}000}$$

$$Safety\ \ Ratio = \frac{Actual\ \ Crash\ \ Rate}{Critical\ \ Crash\ \ Rate}$$

Confidence Level (%)	Constant Z
68.30	1.00
86.60	1.50
90.00	1.64
95.00	1.96
95.50	2.00
98.80	2.50
99.00	2.58
99.70	3.00
99.95	3.29

Table 21 – Abnormal Crash Details & Countermeasures NW 79 Avenue and NW 36 Street

NW 79 Avenue & NW 36 Street

(6 Lane x 4 Lane, Signalized, With Turn Lanes, 4 Leg Intersection -Table 35) - URBAN Spot

			NUMBER OF CRASHES YEAR 2006	2007	2008	3 YEAR TOTAL CRASHE	% of Total	MEAN Accidents per Year	Possible Cause(s)	Counter-measure(s)
Rear End	Total Rear End Crashes		**19**	**18**	**19**	**56**	**100%**	**18.67**	(1)	2
	Lighting Conditions	Day Light	15	14	17	46	82%	15.33	(4)	4
		Dawn	0	0	0	0	0%	0.00	(5)	6
		Dark	4	4	2	10	18%	3.33	(8)	
	Hours of Day	00:00 - 06:00	1	1	0	2	4%	0.67		
		06:00 - 09:00	2	4	4	10	18%	3.33		
		09:00 - 11:00	2	4	2	8	14%	2.67		
		11:00 - 13:00	1	1	2	4	7%	1.33		
		13:00 - 15:00	2	2	1	5	9%	1.67		
		15:00 - 18:00	8	3	5	16	29%	5.33		
		18:00 - 24:00	3	3	5	11	20%	3.67		
	Direction	North	4	3	1	8	14%	2.67		
		South	4	4	3	11	20%	3.67		
		East	6	8	7	21	38%	7.00		
		West	5	3	8	16	29%	5.33		
		Unknown	0	0	0	0	0%	0.00		

			NUMBER OF CRASHES YEAR 2006	2007	2008	3 YEAR TOTAL CRASHE	% of Total	MEAN Accidents per Year	Possible Cause(s)	Counter-measure(s)
Sideswipe (Overtake)	Total Sideswipe Crashes		**20**	**19**	**23**	**62**	**100%**	**20.67**	(16)	4
	Lighting Conditions	Day Light	16	16	20	52	84%	17.33	(19)	19
		Dawn	2	1	2	5	8%	1.67	(20)	21
		Dark	2	2	1	5	8%	1.67		22
	Hours of Day	00:00 - 06:00	0	0	0	0	0%	0.00		
		06:00 - 09:00	2	1	2	5	8%	1.67		
		09:00 - 11:00	1	2	1	4	6%	1.33		
		11:00 - 13:00	2	2	3	7	11%	2.33		
		13:00 - 15:00	5	4	4	13	21%	4.33		
		15:00 - 18:00	7	6	4	17	27%	5.67		
		18:00 - 24:00	3	4	9	16	26%	5.33		
	Direction	North	4	8	10	22	35%	7.33		
		South	3	4	2	9	15%	3.00		
		East	9	6	6	21	34%	7.00		
		West	4	1	5	10	16%	3.33		
		Unknown	0	0	0	0	0%	0.00		

			NUMBER OF CRASHES YEAR 2006	2007	2008	3 YEAR TOTAL CRASHE	% of Total	MEAN Accidents per Year	Possible Cause(s)	Counter-measure(s)
Right Turn	Total Right Turn Crashes		**3**	**3**	**1**	**7**	**100%**	**2.33**	(8)	4
	Lighting Conditions	Day Light	1	3	0	4	57%	1.33	(9)	9
		Dawn	0	0	0	0	0%	0.00	(12)	21
		Dark	2	0	1	3	43%	1.00		
	Hours of Day	00:00 - 06:00	1	0	1	2	29%	0.67		
		06:00 - 09:00	0	1	0	1	14%	0.33		
		09:00 - 11:00	0	0	0	0	0%	0.00		
		11:00 - 13:00	0	0	0	0	0%	0.00		
		13:00 - 15:00	1	0	0	1	14%	0.33		
		15:00 - 18:00	0	2	0	2	29%	0.67		
		18:00 - 24:00	1	0	0	1	14%	0.33		
	Direction	NB→EB	1	1	0	2	29%	0.67		
		EB→SB	0	0	0	0	0%	0.00		
		WB→NB	0	1	1	2	29%	0.67		
		SB→WB	2	1	0	3	43%	1.00		
		Unknown	0	0	0	0	0%	0.00		

3.8.3. Traffic Operation Conditions and Analysis

In order to identify the traffic operation characteristics and safety relevant conflicts, field observations at NW 79 Avenue and NW 36 Street were performed on a typical weekday on October 28, 2010. A summary of the traffic data is presented in *Figure 31*, and the field review is presented in *Figure 32*.

This intersection has single left-turn bays for northbound and eastbound approaches; with the westbound and southbound approaches having a double left-turn operation. The signal operation is split phases for northbound and southbound traffic, and protected for eastbound and westbound left-turn traffic.

Heavy traffic and long queues were observed for the eastbound approach. Also, the approach has three through lanes. However, there are four receiving lanes.

Due to the presence of the SR-826 highway ramps on the east leg, a considerable amount of weaving was observed in both east/west directions. Also, weaving and lane changes were noticed at northbound right-turns and southbound left-turns.

It was noticed that there are no signs to alert motorists that the southernmost lane of the eastbound receiving lanes is a right-turn only to access the SR-826 southbound.

The stop bar for the northbound approach is pulled away from the intersection which causes difficulties for right-turns on red.

The gas station driveways on the southwest corner present a conflict with the eastbound through traffic.

3.8.4. Recommendations

Based on the safety analysis, field observations and traffic operations for the intersection of NW 79 Avenue and NW 36 Street, the following is recommended:

- Add one through lane to the eastbound approach by converting the striped gore to a full lane and make the necessary changes on the receiving lanes pavement markings.
- Retiming/optimizing of the existing signal while maintaining cycle length for both the AM and PM peak hours.
- Installing advance guide signs for SR-826 for eastbound and northbound (FTP-17-06 & R3-5f) and southbound (FTP-17-06 & R3-5e).
- Relocate the northbound stop bar closer to the intersection to improve the sight distance triangles for northbound approach.
- Provide ADA approved pedestrian ramps at all corners.
- Refurbishing of pavement markings using thermoplastic painting.

A conceptual vision of the proposed roadway improvements is exhibited in *Figure 33*.

24-hr Approach Counts

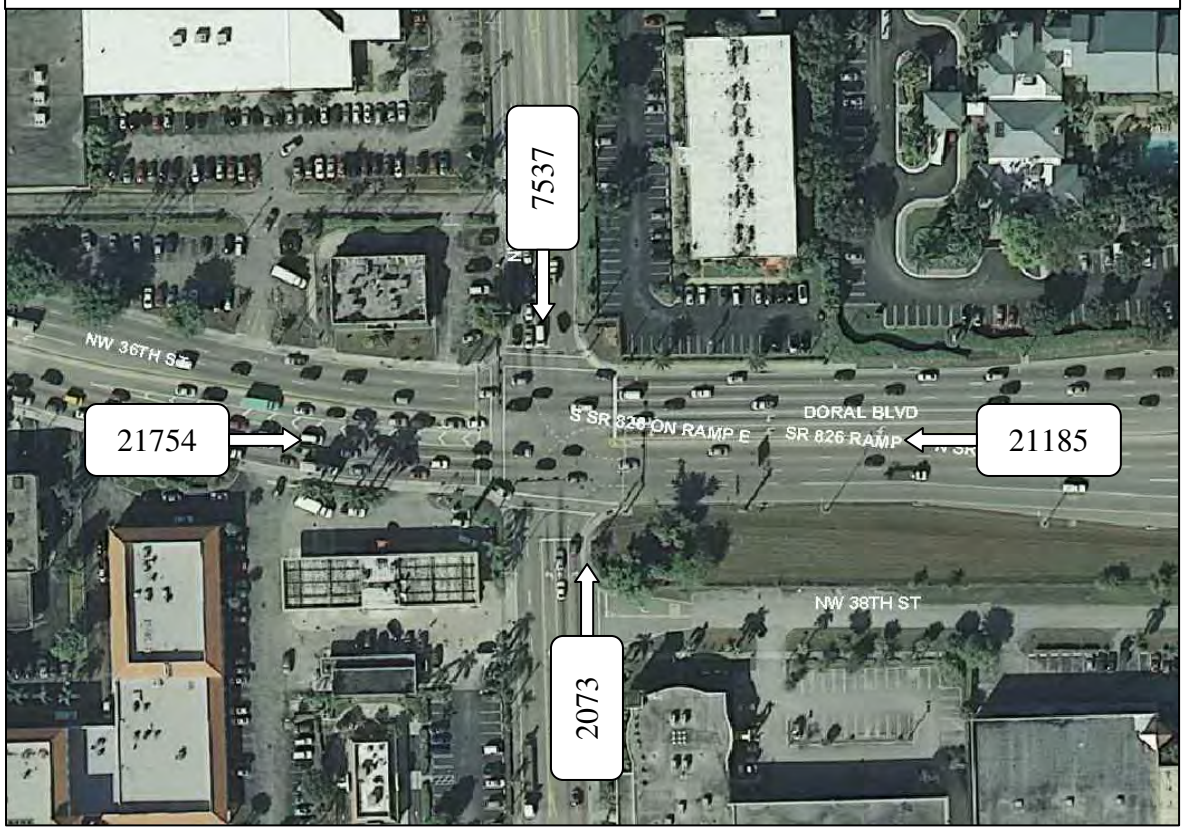

Turning Movement Counts (TMC)

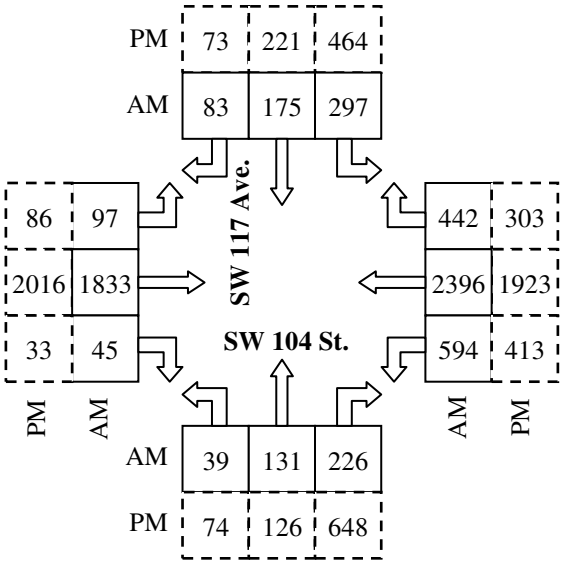

Figure 31: Traffic Data – *NW 79 Avenue and NW 36 Street*

Eastbound approach: A large wide gore that can be converted to an extra lane.

Eastbound approach: Gas station driveways and heavy vehicles affect capacity.

Northbound approach: Wide gap between the stop bar and the intersection.

Southbound left-turns: Considerable weaving to access the SR-826 ramps.

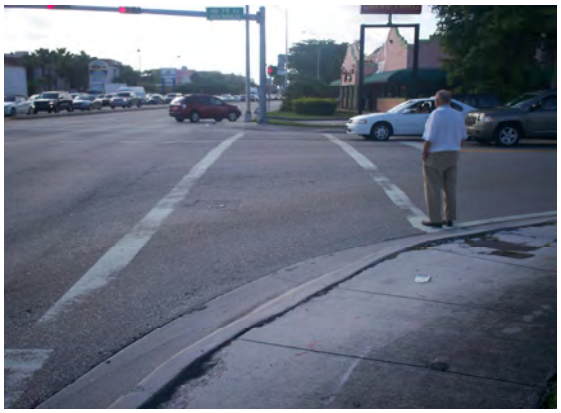

North side: Substandard sidewalks and pedestrian ramps.

Faded pavement markings.

Figure 32: Field Review – *NW 79 Avenue and NW 36 Street*

Figure 33: Conceptual Plan – *NW 79 Avenue and NW 36 Street*

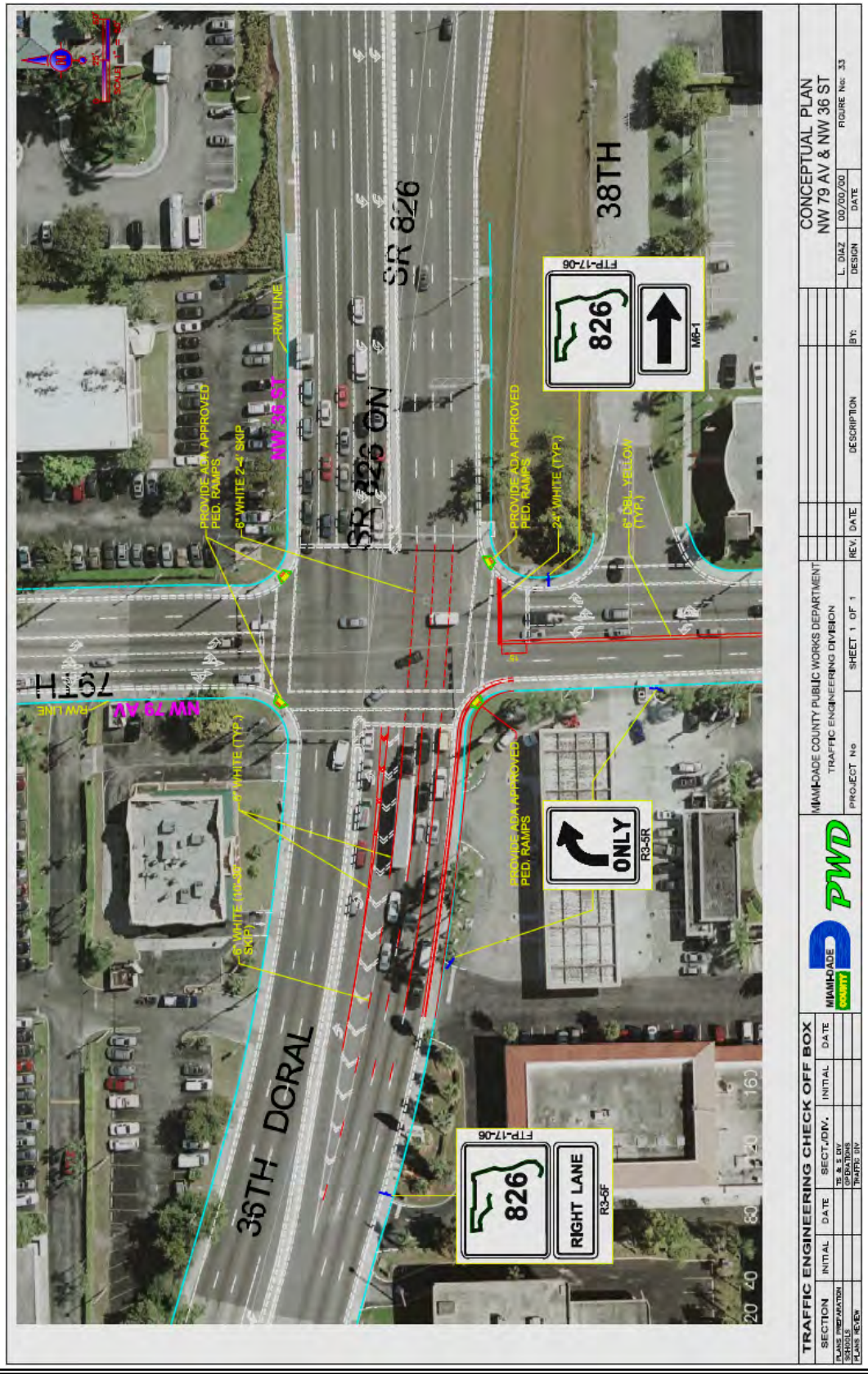

3.9. SW 137 Avenue and SW 56 Street

3.9.1. Site Description

This intersection is a signalized four legged intersection located in the unincorporated area of southwest Miami Dade County. SW 137 Avenue is a six lane urban arterial divided by a raised median that runs north-south, and SW 104 Street is a four lane urban arterial divided by a raised median that runs east-west.

3.9.2. Safety Conditions and Analysis

The intersection of SW 137 Avenue and SW 56 Street is ranked number 9 in our high crash locations list. A review of the hard copy police reports for the year 2006 through 2008 was performed. During the three-year analysis period, 135 relevant crashes occurred at the intersection. The analysis indicated that the average number of crashes per year is 45. The crash summaries, crash statistics and collision diagrams for the intersection are documented in *Appendix A*.

Based on the analysis of crash records for this intersection, the predominant types of crashes are shown in *Figure 34*.

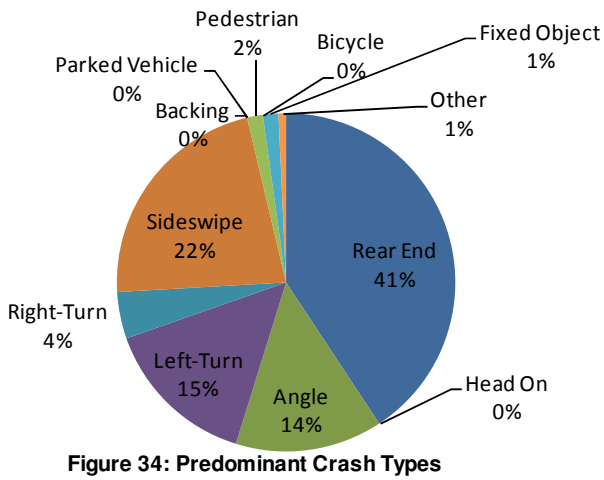

Figure 34: Predominant Crash Types
SW 137 AVE & SW 56 ST

Calculated intersection mean crash per year were compared to the average Miami-Dade Crash Rate for County corridors to assess the safety conditions at the study intersection in relation to other roadways with similar traffic and geometric characteristics. This study is based on the 2007 FDOT's "Expected Value Analysis." *Table 22* illustrates the expected accident volume analysis of this intersection as well as the safety ratios and the confidence levels during the analysis period.

Based on a regression growth of 2% from the 2006 entering volume, the calculated safety ratios for the years 2006, 2007, and 2008 were 1.267, 1.297, and 1.687, respectively. The safety ratio for the three years averaged 1.417. Also, results of confidence level indicated that this intersection has been a high crash location during the three years with a confidence level higher than 99.95%.

From this analysis, it was determined that rear end, left-turn, right-turn and sideswipe collisions presented abnormal crash patterns that exceed the threshold limits for the 95th percentile and 90th percentile confidence level. Those results indicate that these types of collisions were abnormally high during the period of 2006 through 2008. A detailed review of the abnormal crashes as well as probable countermeasures is presented in *Table 23*.

Table 22 – Crash Analysis – SW 137 Avenue and SW 56 Street

SW 137 Avenue & SW 56 Street

(6 Lane x 4 Lane, Signalized, With Turn Lanes, 4 Leg Intersection -Table 35) - URBAN Spot

	TYPE OF CRASH	NUMBER OF CRASHES YEAR 2006	2007	2008	3 YEAR TOTAL CRASHE	% of Total	MEAN Accidents per Year	EXPECTED ANNUAL CRASH VALUE MEAN	90th Percentile	95th Percentile	ABNORMALLY HIGH CRASHES Mean	90th Percentil	95th Percentil
COLLISION TYPE	Rear End	13	14	28	55	20%	18.33	8.68	17.26	18.90	X	X	
	Head On	0	0	0	0	0%	0.00	0.60	1.64	1.84			
	Angle	7	9	3	19	6%	6.33	5.40	9.19	9.92	X		
	Left Turn	9	7	4	20	6%	6.67	3.00	6.13	6.73	X	X	
	Right Turn	0	2	4	6	1%	2.00	0.46	1.36	1.53	X	X	X
	Sideswipe	10	7	13	30	7%	10.00	2.58	4.92	5.37	X	X	X
	Backed Into	0	0	0	0	0%	0.00	0.28	0.84	0.94			
	Coll. w/ Parked Car	0	0	0	0	0%	0.00	0.12	0.57	0.65			
	Coll. w/ Pedestrian	1	1	0	2	0%	0.67	0.74	1.80	2.00			
	Coll. w/ Bicycle	0	0	0	0	0%	0.00	0.14	0.49	0.55			
	Fixed Object	0	1	1	2	0%	0.67	0.79	2.01	2.24			
	Ran Off Road	0	0	0	0	0%	0.00	0.01	0.11	0.13			
	Overtuned	0	0	0	0	0%	0.00	0.04	0.28	0.33			
	Other	0	0	1	1	0%	0.33	8.67	21.05	23.42			
	Total Crashes	40	41	54	135	23%	45.00	31.51	54.94	59.43	X		
SEVERITY	PDO crashes	34	35	52	121	90%	40.33	19.21	36.95	40.35	X	X	
	Fatal crashes	0	1	0	1	1%	0.33	0.16	0.56	0.63	X		
	Injury crashes	6	5	2	13	10%	4.33	20.77	38.34	41.71			
LIGHT CONDITIONS	Day Light	29	30	37	96	71%	32.00	19.89	35.12	38.03	X		
	Dusk	1	1	1	3	2%	1.00	0.61	1.43	1.58	X		
	Dawn	0	1	1	2	1%	0.67	0.38	1.03	1.16	X		
	Dark	10	9	14	33	24%	11.00	10.22	18.94	20.61	X		
	Unknown	0	0	1	1	1%	0.33	0.41	1.15	1.30			
SURFACE CONDITIONS	Dry	24	35	50	109	81%	36.33	26.41	45.71	49.41	X		
	Wet	6	6	3	15	11%	5.00	4.41	8.78	9.62	X		
	Others	10	0	1	11	8%	3.67	0.69	1.88	2.11	X	X	X
MONTH OF A YEAR	January	5	3	3	11	8%	3.67	2.57	5.04	5.52	X		
	February	4	1	4	9	7%	3.00	2.37	4.59	5.02	X		
	March	2	2	11	15	11%	5.00	3.09	5.92	6.46	X		
	April	3	4	3	10	7%	3.33	2.57	5.30	5.82	X		
	May	5	2	3	10	7%	3.33	2.51.	4.81	5.25			
	June	2	4	3	9	7%	3.00	2.81	5.74	6.30	X		
	July	4	3	1	8	6%	2.67	2.60	4.96	5.42	X		
	August	2	9	6	17	13%	5.67	3.00	5.66	6.17	X	X	
	September	4	3	5	12	9%	4.00	2.48	4.92	5.39	X		
	October	4	3	5	12	9%	4.00	2.89	5.40	5.88	X		
	November	3	4	4	11	8%	3.67	2.41	4.85	5.32	X		
	December	2	3	6	11	8%	3.67	2.22	4.55	5.00	X		
DAY OF THE WEEK	Sunday	3	3	6	12	9%	4.00	4.00	6.58	7.08	X		
	Monday	8	8	6	22	16%	7.33	4.62	9.23	10.11	X		
	Tuesday	6	3	7	16	12%	5.33	4.46	7.81	8.46	X		
	Wednesday	6	5	10	21	16%	7.00	4.56	8.62	9.40	X		
	Thursday	5	5	8	18	13%	6.00	5.04	9.04	9.80	X		
	Friday	8	10	8	26	19%	8.67	4.86	9.39	10.26	X		
	Saturday	4	7	9	20	15%	6.67	3.98	8.10	8.89	X		
HOUR OF THE DAY	00:00-06:00	2	1	4	7	5%	2.33	3.79	8.65	9.58			
	06:00-09:00	4	6	8	18	13%	6.00	3.44	6.94	7.61	X		
	09:00-11:00	5	3	4	12	9%	4.00	2.58	5.30	5.82	X		
	11:00-13:00	6	3	8	17	13%	5.67	3.12	5.78	6.29	X		
	13:00-15:00	8	7	6	21	16%	7.00	3.57	6.32	6.85	X	X	X
	15:00-18:00	5	9	10	24	18%	8.00	6.38	11.52	12.50	X		
	18:00-24:00	10	12	14	36	27%	12.00	8.60	15.51	16.83	X		

	YEAR 1	2	3	3-Year Average
Average Daily Traffic ADT *(Vehicles per Day)*	82,183	83,861	85,572	83,872
Florida Average Crash rate *(Crashes per Million Entering Vehicles)*	0.579	0.568	0.566	0.571
Traffic Base	29.997	30.609	31.234	30.613
Actual Crash Rate *(Crashes per Million Entering Vehicles)*	1.333	1.339	1.729	1.467
Critical Crash Rate *(Crashes per Million Entering Vehicles)*	1.053	1.033	1.025	1.037
Safety Ratio	**1.267**	**1.297**	**1.687**	**1.417**
High Crash Location??	***YES***	***YES***	***YES***	***YES***

$$Actual\ \ Crash\ \ Rate = \frac{A \times 1{,}000{,}000}{V}$$

Where:
A = Total number of crashes or number of crashes by type occurring in a 1 year period.
V = Average Annual Daily Traffic X 365

$$CriticalCrashRate = AVR + \frac{0.5}{TB} + TF\sqrt{\frac{AVR}{TB}}$$

Where:
AVR = Average Statewide Crash Rate for a particular type of intersection or roadway segment.
TB = Traffic Base
TF = Test Factor (z-value)
= *1.96 (assume 95% Confidence Level for RURAL areas)*
= *3.29 (assume 99.95% Confidence Level for URBAN areas)*

$$Traffic\ Base = \frac{Years \times ADT \times 365}{1{,}000{,}000}$$

$$Safety\ \ Ratio = \frac{Actual\ \ Crash\ \ Rate}{Critical\ \ Crash\ \ Rate}$$

Confidence Level (%)	Constant Z
68.30	1.00
86.60	1.50
90.00	1.64
95.00	1.96
95.50	2.00
98.80	2.50
99.00	2.58
99.70	3.00
99.95	3.29

Table 23 – Abnormal Crash Details & Countermeasures
SW 137 Avenue and SW 56 Street

SW 137 Avenue & SW 56 Street

(6 Lane x 4 Lane, Signalized, With Turn Lanes, 4 Leg Intersection -Table 35) - URBAN Spot

			NUMBER OF CRASHES YEAR 2006	2007	2008	3 YEAR TOTAL CRASHE	% of Total	MEAN Accidents per Year	Possible Cause(s)	Counter-measure(s)
Rear End	Total Rear End Crashes		**13**	**14**	**28**	**55**	**100%**	**18.33**	(1)	2
	Lighting Conditions	Day Light	10	12	21	43	78%	14.33	(4)	4
		Dawn	1	1	1	3	5%	1.00	(8)	6
		Dark	2	1	6	9	16%	3.00	(12)	8
	Hours of Day	00:00 - 06:00	1	0	1	2	4%	0.67		
		06:00 - 09:00	1	0	3	4	7%	1.33		
		09:00 - 11:00	2	2	3	7	13%	2.33		
		11:00 - 13:00	2	0	5	7	13%	2.33		
		13:00 - 15:00	4	3	3	10	18%	3.33		
		15:00 - 18:00	2	3	5	10	18%	3.33		
		18:00 - 24:00	1	6	8	15	27%	5.00		
	Direction	North	5	1	6	12	22%	4.00		
		South	8	7	9	24	44%	8.00		
		East	0	3	11	14	25%	4.67		
		West	0	3	2	5	9%	1.67		
		Unknown	0	0	0	0	0%	0.00		

			NUMBER OF CRASHES YEAR 2006	2007	2008	3 YEAR TOTAL CRASHE	% of Total	MEAN Accidents per Year	Possible Cause(s)	Counter-measure(s)
Right Turn	Total Right turn Crashes		**0**	**2**	**4**	**6**	**100%**	**2.00**	(1)	4
	Lighting Conditions	Day Light	0	2	2	4	67%	1.33	(9)	9
		Dawn	0	0	0	0	0%	0.00	(16)	21
		Dark	0	0	2	2	33%	0.67		
	Hours of Day	00:00 - 06:00	0	0	0	0	0%	0.00		
		06:00 - 09:00	0	1	1	2	33%	0.67		
		09:00 - 11:00	0	0	0	0	0%	0.00		
		11:00 - 13:00	0	0	1	1	17%	0.33		
		13:00 - 15:00	0	0	0	0	0%	0.00		
		15:00 - 18:00	0	1	1	2	33%	0.67		
		18:00 - 24:00	0	0	1	1	17%	0.33		
	Direction	WB → NB	0	2	1	3	50%	1.00		
		SB → WB	0	0	1	1	17%	0.33		
		EB → SB	0	0	2	2	33%	0.67		
		NB → EB	0	0	0	0	0%	0.00		
		Unknown	0	0	0	0	0%	0.00		

			NUMBER OF CRASHES YEAR 2006	2007	2008	3 YEAR TOTAL CRASHE	% of Total	MEAN Accidents per Year	Possible Cause(s)	Counter-measure(s)
Left Turn	Total Left Turn Crashes		**9**	**7**	**4**	**20**	**100%**	**6.67**	(4)	9
	Lighting Conditions	Day Light	4	2	1	7	35%	2.33	(9)	13
		Dawn	0	2	2	4	20%	1.33	(13)	15
		Dark	5	3	1	9	45%	3.00		16
	Hours of Day	00:00 - 06:00	0	1	2	3	15%	1.00		
		06:00 - 09:00	1	1	1	3	15%	1.00		
		09:00 - 11:00	1	0	0	1	5%	0.33		
		11:00 - 13:00	0	0	0	0	0%	0.00		
		13:00 - 15:00	1	1	0	2	10%	0.67		
		15:00 - 18:00	0	2	0	2	10%	0.67		
		18:00 - 24:00	6	2	1	9	45%	3.00		
	Direction	NB → WB	3	2	0	5	25%	1.67		
		WB → SB	1	0	0	1	5%	0.33		
		SB → EB	1	0	0	1	5%	0.33		
		EB → NB	4	5	4	13	65%	4.33		
		Unknown	0	0	0	0	0%	0.00		

			NUMBER OF CRASHES YEAR 2006	2007	2008	3 YEAR TOTAL CRASHE	% of Total	MEAN Accidents per Year	Possible Cause(s)	Counter-measure(s)
Sideswipe (Overtake)	Total Sideswipe Crashes		**10**	**7**	**13**	**30**	**100%**	**10.00**	(16)	4
	Lighting Conditions	Day Light	9	4	10	23	77%	7.67	(19)	19
		Dawn	0	0	0	0	0%	0.00	(20)	20
		Dark	1	3	3	7	23%	2.33		
	Hours of Day	00:00 - 06:00	0	1	0	1	3%	0.33		
		06:00 - 09:00	2	0	1	3	10%	1.00		
		09:00 - 11:00	1	0	0	1	3%	0.33		
		11:00 - 13:00	2	0	2	4	13%	1.33		
		13:00 - 15:00	2	0	3	5	17%	1.67		
		15:00 - 18:00	1	3	4	8	27%	2.67		
		18:00 - 24:00	2	3	3	8	27%	2.67		
	Direction	North	2	3	5	10	33%	3.33		
		South	5	1	4	10	33%	3.33		
		East	1	2	3	6	20%	2.00		
		West	2	1	1	4	13%	1.33		
		Unknown	0	0	0	0	0%	0.00		

3.9.3. Traffic Operation Conditions and Analysis

In order to identify the traffic operation characteristics and safety relevant conflicts, field observations at SW 137 Avenue and SW 56 Street were performed on a typical weekday on November 3, 2010. A summary of the traffic data is presented in *Figure 35*, and the field review is presented in *Figure 36*.

This intersection has single left-turn bays for all approaches except the westbound which has double left-turn lanes. The southbound and westbound approaches have exclusive right-turn lanes. The signal operation is protected/permissive for all approaches except the westbound approach which has protected only left-turns.

Long queues were observed for northbound left-turn with vehicles spilling back and blocking the through lane. Also, the driveways for the shopping plaza in the south leg present conflict with the north/south traffic.

The eastbound left-turn movement struggles to cross the opposing westbound through movement. Red light running was observed at the intersection.

It was noticed that the bus stop at the northbound approach is so close to the intersection that it affects the through and right-turn movements.

3.9.4. Recommendations

Based on the safety analysis, field observations and traffic operations for the intersection of SW 137 Avenue and SW 56 Street, the following is recommended:

- Add one left turn lane to the northbound approach by converting the striped area on southbound receiving lanes to a full through lane and realigning the southbound.
- Retiming/optimizing of the existing signal while maintaining cycle length for both the AM and PM peak hours.
- Reduce the offset between eastbound and westbound left turn lanes by reducing the west leg median width and creating a striped gore.
- Convert the full median opening at south leg (Publix driveway) to a directional median opening.
- Install “Right Turn Only” sign (R3-5R) at the exit of the south leg driveways.
- Install new advance intersection lane control signs for northbound, southbound and westbound approaches.
- Relocate the bus stop on northbound approach away from the intersection.
- Provide ADA approved pedestrian ramps at all corners.
- Refurbishing of pavement markings using thermoplastic painting.

A conceptual vision of the proposed roadway improvements is exhibited in *Figure 37*.

24-hr Approach Counts

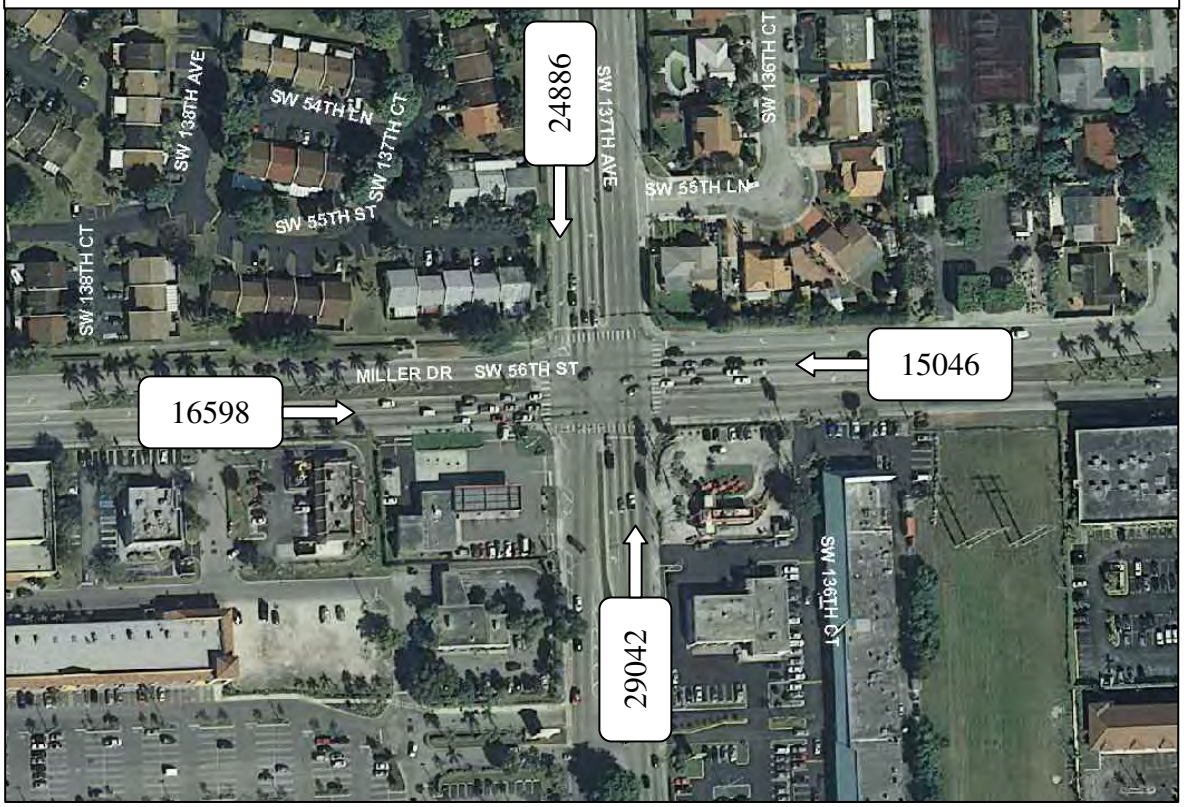

Turning Movement Counts (TMC)

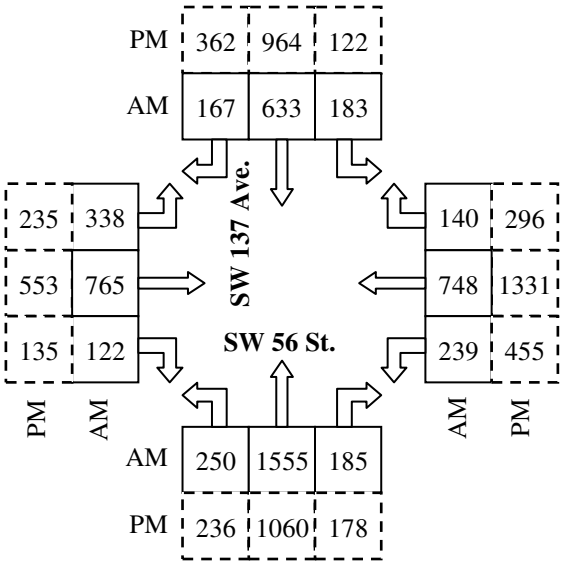

Figure 35: Traffic Data – *SW 137 Avenue and SW 56 Street*

South leg: Driveways to shopping plazas present conflict.

Eastbound approach: Left-turn lanes are not aligned to reduce the offset.

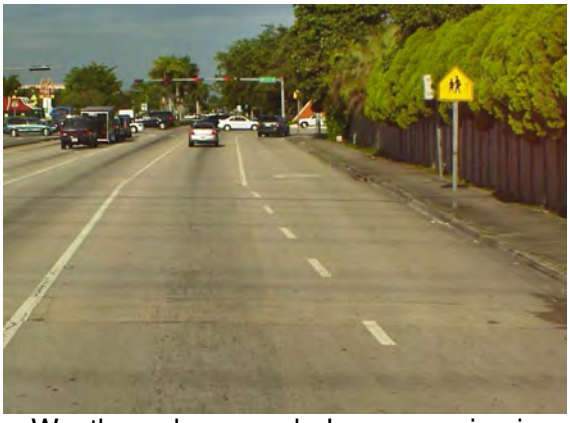

Westbound approach: Lane use sign is obstructed also missing one.

Northbound approach: The left-turn storage is insufficient to accommodate demand.

Northbound approach: Bus stop is so close to the intersection.

Faded/improper pavement markings and substandard pedestrian ramps.

Figure 36: Field Review – *SW 137 Avenue and SW 56 Street*

Figure 37: Conceptual Plan – *SW 137 Avenue and SW 56 Street*

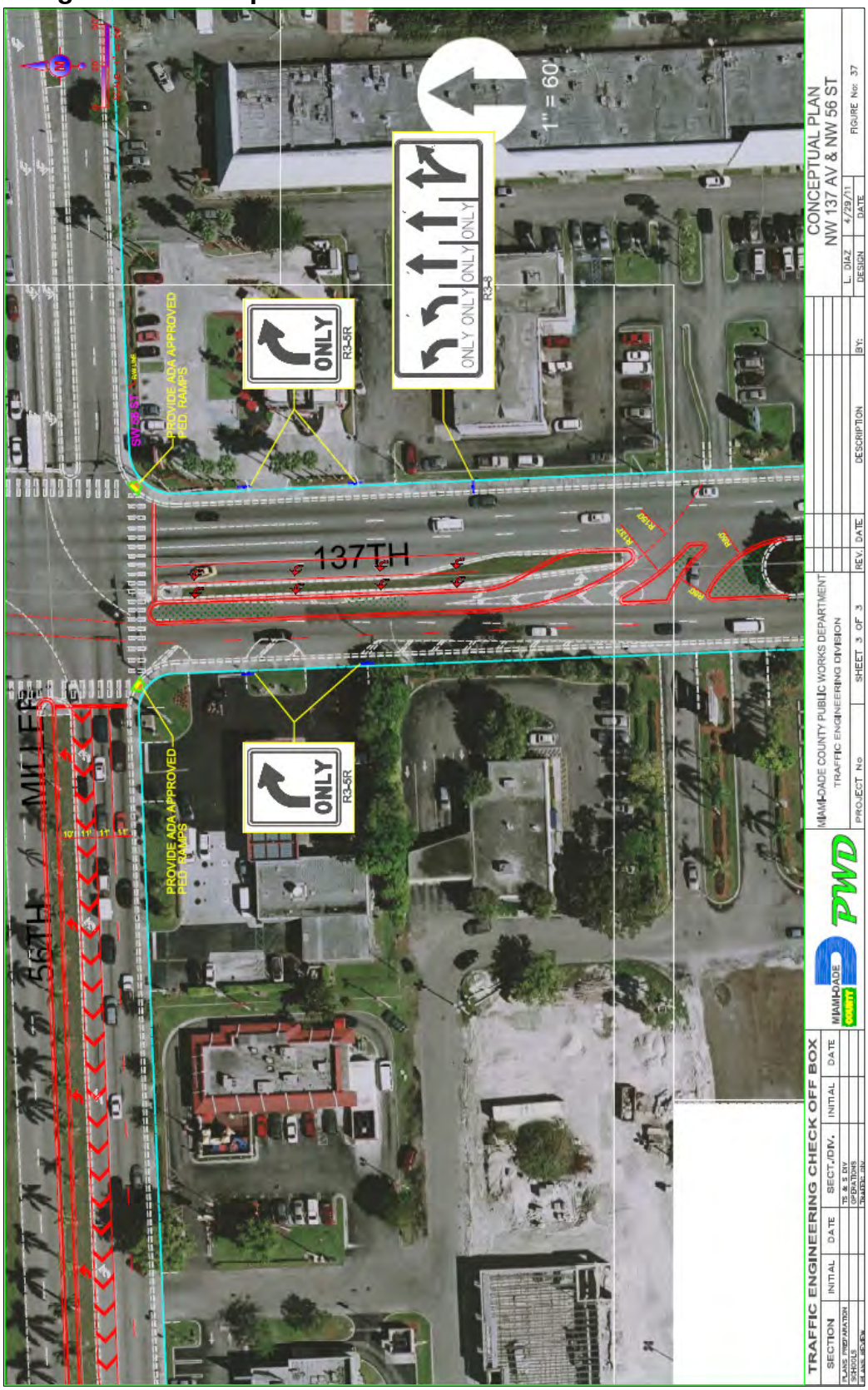

3.10. NW 79 Avenue and NW 25 Street

3.10.1. Site Description

This intersection is a signalized four legged intersection located in the northwest part of Miami Dade County in the City of Doral. NW 79 Avenue is a four lane collector divided by a paved median that runs north-south, and NW 25 Street is a four lane urban arterial divided by a paved median that runs east-west.

3.10.2. Safety Conditions and Analysis

The intersection of NW 79 Avenue and NW 25 Street is ranked number 10 in our high crash locations list. A review of the hard copy police reports for the year 2006 through 2008 was performed. During the three-year analysis period, 123 relevant crashes occurred at the intersection. The analysis indicated that the average number of crashes per year is 41. The crash summaries, crash statistics and collision diagrams for the intersection are documented in *Appendix A*.

Based on the analysis of crash records for this intersection, the predominant types of crashes are shown in *Figure 38.*

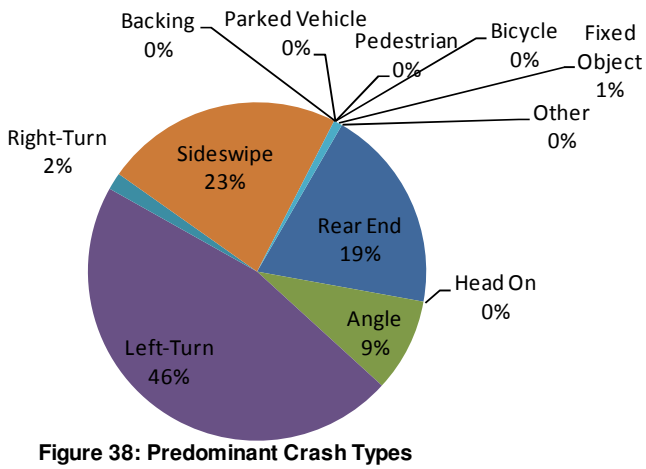

Figure 38: Predominant Crash Types
NW 79 AVE & NW 25 ST

Calculated intersection mean crash per year were compared to the average Miami-Dade Crash Rate for County corridors to assess the safety conditions at the study intersection in relation to other roadways with similar traffic and geometric characteristics. This study is based on the 2007 FDOT's "Expected Value Analysis." *Table 24* illustrates the expected accident volume analysis of this intersection as well as the safety ratios and the confidence levels during the analysis period.

Based on a regression growth of 2% from the 2006 entering volume, the calculated safety ratios for the years 2006, 2007, and 2008 were 2.251, 2.860, and 2.350, respectively. The safety ratio for the three years averaged 2.487. Also, results of confidence level indicated that this intersection has been a high crash location during the three years with a confidence level higher than 99.95%.

From this analysis, it was determined that left-turn, sideswipe and fixed object collisions presented abnormal crash patterns that exceed the threshold limits for the 95th percentile and 90th percentile confidence level. Those results indicate that these types of collisions were abnormally high during the period of 2006 through 2008. A detailed review of the abnormal crashes as well as probable countermeasures is presented in *Table 25*.

Table 24 – Crash Analysis – NW 79 Avenue and NW 25 Street

NW 79 Avenue & NW 25 Street

(4 Lane x 4 Lane, Signalized, With Turn Lanes, 4 Leg Intersection, Divided -Table 28) - URBAN Spot

	TYPE OF CRASH	NUMBER OF CRASHES YEAR 2006	2007	2008	3 YEAR TOTAL CRASHE	% of Total	MEAN Accidents per Year	EXPECTED ANNUAL CRASH VALUE MEAN	90th Percentile	95th Percentile	ABNORMALLY HIGH CRASHES Mean	90th Percentil	95th Percentil
COLLISION TYPE	Rear End	9	9	6	24	10%	8.00	5.70	16.96	19.12	X		
	Head On	0	0	0	0	0%	0.00	0.33	1.02	1.15			
	Angle	3	4	4	11	3%	3.67	3.05	7.08	7.85	X		
	Left Turn	17	24	16	57	17%	19.00	1.67	4.02	4.47	X	X	X
	Right Turn	1	1	0	2	1%	0.67	0.33	1.25	1.42	X		
	Sideswipe	7	9	12	28	7%	9.33	1.60	4.64	5.22	X	X	X
	Backed Into	0	0	0	0	0%	0.00	0.17	0.56	0.63			
	Coll. w/ Parked Car	0	0	0	0	0%	0.00	0.10	0.51	0.59			
	Coll. w/ Pedestrian	0	0	0	0	0%	0.00	0.28	1.04	1.19			
	Coll. w/ Bicycle	0	0	0	0	0%	0.00	0.09	0.33	0.38			
	Fixed Object	0	1	0	1	0%	0.33	0.03	0.21	0.24	X	X	X
	Ran Off Road	0	0	0	0	0%	0.00	0.00	0.00	0.00			
	Overtuned	0	0	0	0	0%	0.00	0.03	0.21	0.24			
	Other	0	0	0	0	0%	0.00	3.70	8.83	9.82			
	Total Crashes	37	48	38	123	23%	41.00	17.77	40.96	45.39	X	X	
SEVERITY	PDO crashes	36	45	37	118	96%	39.33	9.93	22.30	24.67	X	X	X
	Fatal crashes	0	0	0	0	0%	0.00	0.05	0.26	0.29			
	Injury crashes	1	3	1	5	4%	1.67	13.14	33.08	36.90			
LIGHT CONDITIONS	Day Light	34	43	35	112	91%	37.33	12.40	29.18	32.39	X	X	X
	Dusk	2	1	1	4	3%	1.33	0.28	0.87	0.98	X	X	X
	Dawn	0	0	0	0	0%	0.00	0.17	0.56	0.63			
	Dark	1	4	2	7	6%	2.33	4.56	10.53	11.68			
	Unknown	0	0	0	0	0%	0.00	0.35	1.05	1.18			
SURFACE CONDITIONS	Dry	28	37	35	100	81%	33.33	15.30	34.45	38.12	X		
	Wet	5	9	3	17	14%	5.67	2.10	6.02	6.76	X		
	Others	4	2	0	6	5%	2.00	0.37	1.10	1.24	X	X	X
MONTH OF A YEAR	January	3	4	4	11	9%	3.67	1.42	3.33	3.69	X	X	
	February	4	5	1	10	8%	3.33	1.42	3.53	3.93	X		
	March	3	6	5	14	11%	4.67	1.67	4.12	4.59	X	X	X
	April	1	3	5	9	7%	3.00	1.30	3.21	3.57	X		
	May	2	5	5	12	10%	4.00	1.74	4.46	4.99	X		
	June	4	0	0	4	3%	1.33	1.38	3.49	3.90			
	July	2	1	0	3	2%	1.00	1.35	3.22	3.58			
	August	3	5	0	8	7%	2.67	1.56	3.99	4.46	X		
	September	4	4	1	9	7%	3.00	1.46	3.73	4.16	X		
	October	3	7	8	18	15%	6.00	1.47	3.59	4.00	X	X	X
	November	5	5	5	15	12%	5.00	1.39	3.53	3.94	X	X	X
	December	3	3	4	10	8%	3.33	1.61	4.43	4.97	X		
DAY OF THE WEEK	Sunday	0	1	0	1	1%	0.33	1.46	3.47	3.85			
	Monday	6	12	8	26	21%	8.67	2.70	6.42	7.13	X	X	X
	Tuesday	7	8	8	23	19%	7.67	2.49	6.18	6.88	X	X	X
	Wednesday	6	6	5	17	14%	5.67	2.56	5.84	6.47	X		
	Thursday	4	4	6	14	11%	4.67	2.88	7.20	8.03	X		
	Friday	12	17	9	38	31%	12.67	3.07	7.50	8.35	X	X	X
	Saturday	2	0	2	4	3%	1.33	2.61	6.40	7.13			
HOUR OF THE DAY	00:00-06:00	1	2	1	4	3%	1.33	1.70	3.39	3.71			
	06:00-09:00	1	3	0	4	3%	1.33	1.98	5.12	5.72			
	09:00-11:00	3	7	9	19	15%	6.33	1.72	4.23	4.71	X	X	X
	11:00-13:00	4	4	6	14	11%	4.67	2.40	6.30	7.05	X		
	13:00-15:00	12	7	11	30	24%	10.00	1.95	5.32	5.96	X	X	X
	15:00-18:00	13	18	7	38	31%	12.67	3.58	7.81	8.62	X	X	X
	18:00-24:00	3	7	4	14	11%	4.67	4.42	10.63	11.82	X		

	YEAR 1	2	3	3-Year Average
Average Daily Traffic ADT *(Vehicles per Day)*	46,594	47,545	48,515	47,551
Florida Average Crash rate *(Crashes per Million Entering Vehicles)*	0.420	0.424	0.394	0.413
Traffic Base	17.007	17.354	17.708	17.356
Actual Crash Rate *(Crashes per Million Entering Vehicles)*	2.176	2.766	2.146	2.362
Critical Crash Rate *(Crashes per Million Entering Vehicles)*	0.966	0.967	0.913	0.949
Safety Ratio	**2.251**	**2.860**	**2.350**	**2.487**
High Crash Location??	***YES***	***YES***	***YES***	***YES***

$$Actual\ \ Crash\ \ Rate = \frac{A \times 1{,}000{,}000}{V}$$

Where:
A = Total number of crashes or number of crashes by type occurring in a 1 year period.
V = Average Annual Daily Traffic X 365

$$CriticalCrashRate = AVR + \frac{0.5}{TB} + TF\sqrt{\frac{AVR}{TB}}$$

Where:
AVR = Average Statewide Crash Rate for a particular type of intersection or roadway segment.
TB = Traffic Base
TF = Test Factor (z-value)
= 1.96 (assume 95% Confidence Level for RURAL areas)
= 3.29 (assume 99.95% Confidence Level for URBAN areas)

$$Traffic\ Base = \frac{Years \times ADT \times 365}{1{,}000{,}000}$$

$$Safety\ \ Ratio = \frac{Actual\ \ Crash\ \ Rate}{Critical\ \ Crash\ \ Rate}$$

Confidence Level (%)	Constant Z
68.30	1.00
86.60	1.50
90.00	1.64
95.00	1.96
95.50	2.00
98.80	2.50
99.00	2.58
99.70	3.00
99.95	3.29

Table 25 – Abnormal Crash Details & Countermeasures NW 79 Avenue and NW 25 Street

NW 79 Avenue & NW 25 Street

(4 Lane x 4 Lane, Signalized, With Turn Lanes, 4 Leg Intersection, Divided -Table 28) - URBAN Spot

			NUMBER OF CRASHES YEAR			3 YEAR TOTAL CRASHES	% of Total	MEAN Accidents per Year	Possible Cause(s)	Counter-measure(s)
			2006	2007	2008					
Left Turn	Total Left Turn Crashes		**17**	**24**	**16**	**57**	**100%**	**19.00**	(8)	13
	Lighting Conditions	Day Light	16	24	15	55	96%	18.33	(9)	
		Dawn	0	0	0	0	0%	0.00	(13)	
		Dark	1	0	1	2	4%	0.67		
	Hours of Day	00:00 - 06:00	0	1	1	2	4%	0.67		
		06:00 - 09:00	0	0	0	0	0%	0.00		
		09:00 - 11:00	1	5	3	9	16%	3.00		
		11:00 - 13:00	0	3	3	6	11%	2.00		
		13:00 - 15:00	7	4	4	15	26%	5.00		
		15:00 - 18:00	6	9	2	17	30%	5.67		
		18:00 - 24:00	3	2	3	8	14%	2.67		
	Direction	NB → WB	0	1	0	1	2%	0.33		
		WB → SB	17	23	16	56	98%	18.67		
		SB → EB	0	0	0	0	0%	0.00		
		EB → NB	0	0	0	0	0%	0.00		
		Unknown	0	0	0	0	0%	0.00		

			NUMBER OF CRASHES YEAR			3 YEAR TOTAL CRASHES	% of Total	MEAN Accidents per Year	Possible Cause(s)	Counter-measure(s)
			2006	2007	2008					
SideSwipe	Total SideSwipe Crashes		**7**	**9**	**12**	**28**	**100%**	**9.33**	(8)	4
	Lighting Conditions	Day Light	7	8	12	27	96%	9.00	(19)	19
		Dawn	0	0	0	0	0%	0.00	(20)	21
		Dark	0	1	0	1	4%	0.33	(21)	
	Hours of Day	00:00 - 06:00	0	0	0	0	0%	0.00		
		06:00 - 09:00	1	0	0	1	4%	0.33		
		09:00 - 11:00	0	2	2	4	14%	1.33		
		11:00 - 13:00	4	1	3	8	29%	2.67		
		13:00 - 15:00	1	1	4	6	21%	2.00		
		15:00 - 18:00	1	3	2	6	21%	2.00		
		18:00 - 24:00	0	2	1	3	11%	1.00		
	Direction	North	0	1	0	1	4%	0.33		
		South	0	1	2	3	11%	1.00		
		East	4	5	4	13	46%	4.33		
		West	3	2	6	11	39%	3.67		
		Unknown	0	0	0	0	0%	0.00		

3.10.3. Traffic Operation Conditions and Analysis

In order to identify the traffic operation characteristics and safety relevant conflicts, field observations at NW 79 Avenue and NW 25 Street were performed on a typical weekday on October 28, 2010. A summary of the traffic data is presented in *Figure 39*, and the field review is presented in *Figure 40*.

This intersection has single left-turn bays for northbound, eastbound and westbound approaches; the southbound approach has double left-turn lanes. The signal operation is split phases for northbound and southbound traffic, and protected/permissive for eastbound and westbound left-turn traffic.

Long queues were observed for eastbound left-turn with vehicles spilling back and blocking the through lane. Also, heavy traffic and long queues were observed for eastbound approach.

Traffic turning left into the driveways in the south side of NW 25 Street east and west of NW 79 Avenue present conflict with the east/west traffic. The westbound left-turn movement struggles to cross the opposing eastbound through movement.

Considerable amount of weaving was observed in both east/west directions. Also, weaving and lane changes were noticed at southbound approach.

3.10.4. Recommendations

Based on the safety analysis, field observations and traffic operations for the intersection of NW 79 Avenue and NW 25 Street, the following is recommended:

- Lengthen the eastbound left-turn lane to approximately 350 ft.
- Closing the median opening east and west of the intersection .
- Retiming/optimizing of the existing signal while maintaining cycle length for both the AM and PM peak hours.
- Installing lane use (R3-8) signs for southbound approach.
- Provide ADA approved pedestrian ramps at all corners.
- Resurfacing the intersection.
- Refurbishing of pavement markings using thermoplastic painting.

A conceptual vision of the proposed roadway improvements is exhibited in *Figure 41*.

24-hr Approach Counts

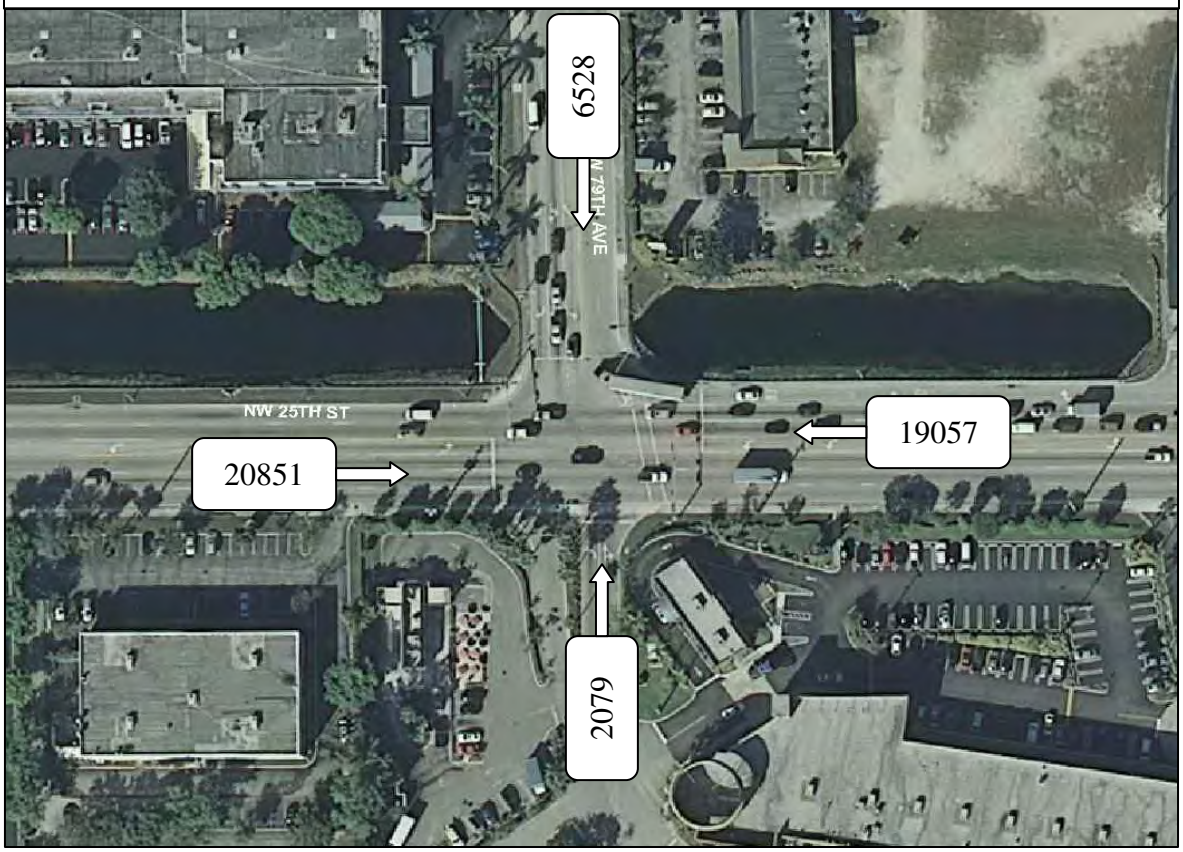

Turning Movement Counts (TMC)

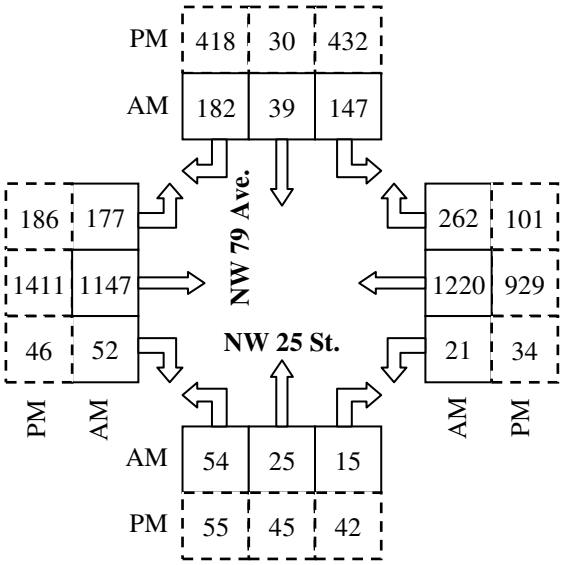

Figure 39: Traffic Data – *NW 79 Avenue and NW 25 Street*

Eastbound approach: Long queues of left-turn vehicles.

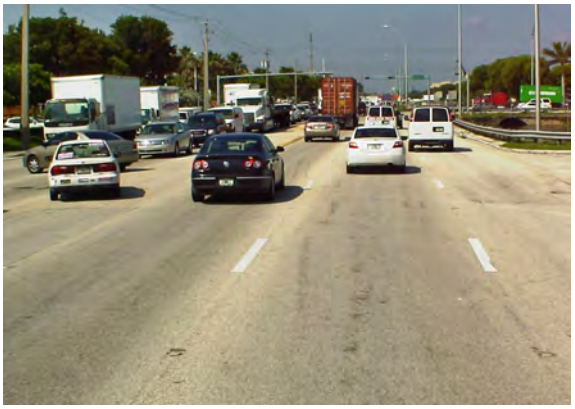

East leg : Westbound left-turns into driveway conflict with the eastbound through traffic.

East leg: Lack of pedestrian features and ADA approved ramps.

Eastbound approach: Heavy traffic backed from the next intersection at the SR-826 affecting the concerned intersection.

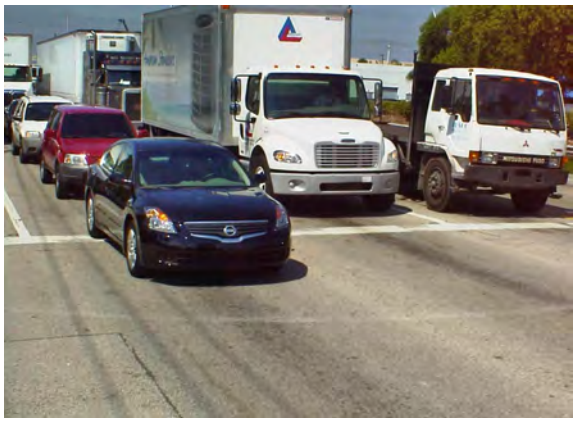

Large number of heavy vehicles and trucks at the intersection.

Faded pavement markings and deteriorated pavement conditions.

Figure 40: Field Review – *NW 79 Avenue and NW 25 Street*

Figure 41: Conceptual Plan – *NW 79 Avenue and NW 25 Street*

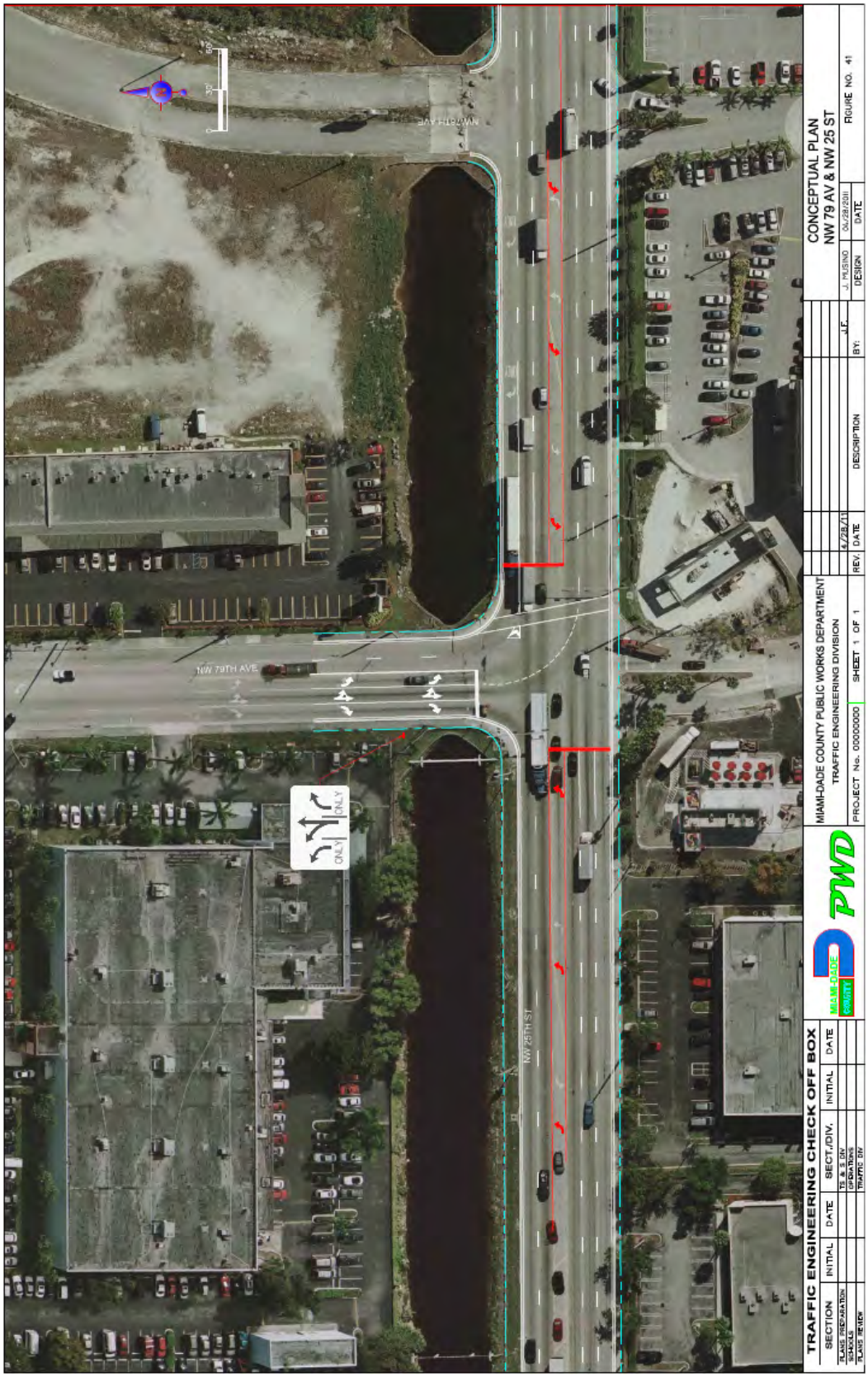

3.11. NW 67 Avenue and NW 169 Street

3.11.1. Site Description

This intersection is a signalized four legged intersection located in the unincorporated area of northwest Miami Dade County. NW 67 Avenue is a six lane urban arterial divided by a raised median that runs north-south, and NW 169 Street is a four lane collector divided by a raised median that runs east-west.

3.11.2. Safety Conditions and Analysis

The intersection of NW 67 Avenue and NW 169 Street is ranked number 11 in our high crash locations list. A review of the hard copy police reports for the year 2006 through 2008 was performed. During the three-year analysis period, 140 relevant crashes occurred at the intersection. The analysis indicated that the average number of crashes per year is 47. The crash summaries, crash statistics and collision diagrams for the intersection are documented in *Appendix A*.

Based on the analysis of crash records for this intersection, the predominant types of crashes are shown in *Figure 42*.

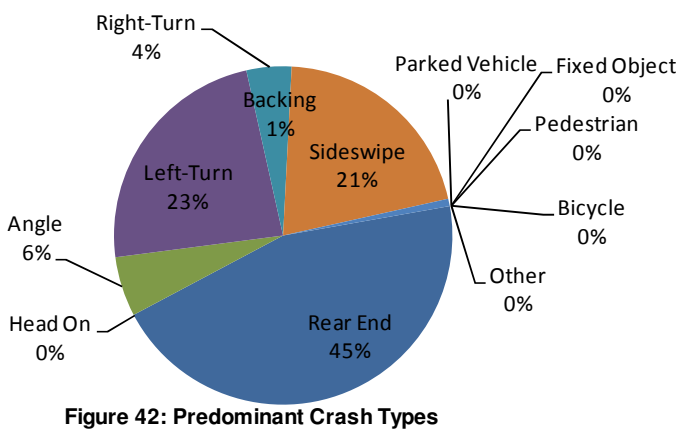

Figure 42: Predominant Crash Types NW 67 AVE & NW 169 ST

Calculated intersection mean crash per year were compared to the average Miami-Dade Crash Rate for County corridors to assess the safety conditions at the study intersection in relation to other roadways with similar traffic and geometric characteristics. This study is based on the 2007 FDOT's "Expected Value Analysis." *Table 26* illustrates the expected accident volume analysis of this intersection as well as the safety ratios and the confidence levels during the analysis period.

Based on a regression growth of 2% from the 2006 entering volume, the calculated safety ratios for the years 2006, 2007, and 2008 were 1.469, 1.810, and 1.483, respectively. The safety ratio for the three years averaged 1.587. Also, results of confidence level indicated that this intersection has been a high crash location during the three years with a confidence level higher than 99.95%.

From this analysis, it was determined that rear end, left-turn, right-turn and sideswipe collisions presented abnormal crash patterns that exceed the threshold limits for the 95th percentile and 90th percentile confidence level. Those results indicate that these types of collisions were abnormally high during the period of 2006 through 2008. A detailed review of the abnormal crashes as well as probable countermeasures is presented in *Table 27*.

Table 26 – Crash Analysis – NW 67 Avenue and NW 169 Street

NW 67 Avenue & NW 169 Street

(6 Lane x 4 Lane, Signalized, With Turn Lanes, 4 Leg Intersection -Table 35) - URBAN Spot

	TYPE OF CRASH	NUMBER OF CRASHES YEAR			3 YEAR TOTAL CRASHE	% of Total	MEAN Accidents per Year	EXPECTED ANNUAL CRASH VALUE			ABNORMALLY HIGH CRASHES		
		2006	2007	2008				MEAN	90th Percentile	95th Percentile	Mean	90th Percentil	95th Percentil
COLLISION TYPE	Rear End	20	25	18	63	23%	21.00	8.68	17.26	18.90	X	X	X
	Head On	0	0	0	0	0%	0.00	0.60	1.64	1.84			
	Angle	2	6	0	8	2%	2.67	5.40	9.19	9.92			
	Left Turn	7	12	14	33	9%	11.00	3.00	6.13	6.73	X	X	X
	Right Turn	3	1	2	6	1%	2.00	0.46	1.36	1.53	X	X	X
	Sideswipe	11	8	10	29	7%	9.67	2.58	4.92	5.37	X	X	X
	Backed Into	0	1	0	1	0%	0.33	0.28	0.84	0.94	X		
	Coll. w/ Parked Car	0	0	0	0	0%	0.00	0.12	0.57	0.65			
	Coll. w/ Pedestrian	0	0	0	0	0%	0.00	0.74	1.80	2.00			
	Coll. w/ Bicycle	0	0	0	0	0%	0.00	0.14	0.49	0.55			
	Fixed Object	0	0	0	0	0%	0.00	0.79	2.01	2.24			
	Ran Off Road	0	0	0	0	0%	0.00	0.01	0.11	0.13			
	Overtuned	0	0	0	0	0%	0.00	0.04	0.28	0.33			
	Other	0	0	0	0	0%	0.00	8.67	21.05	23.42			
	Total Crashes	43	53	44	140	24%	46.67	31.51	54.94	59.43	X		
SEVERITY	PDO crashes	41	49	40	130	93%	43.33	19.21	36.95	40.35	X	X	X
	Fatal crashes	0	0	0	0	0%	0.00	0.16	0.56	0.63			
	Injury crashes	2	4	4	10	7%	3.33	20.77	38.34	41.71			
LIGHT CONDITIONS	Day Light	30	39	28	97	69%	32.33	19.89	35.12	38.03	X		
	Dusk	2	0	2	4	3%	1.33	0.61	1.43	1.58	X		
	Dawn	1	3	4	8	6%	2.67	0.38	1.03	1.16	X	X	X
	Dark	10	11	10	31	22%	10.33	10.22	18.94	20.61	X		
	Unknown	0	0	0	0	0%	0.00	0.41	1.15	1.30			
SURFACE CONDITIONS	Dry	29	30	23	82	59%	27.33	26.41	45.71	49.41	X		
	Wet	4	5	7	16	11%	5.33	4.41	8.78	9.62	X		
	Others	10	18	14	42	30%	14.00	0.69	1.88	2.11	X	X	X
MONTH OF A YEAR	January	4	4	3	11	8%	3.67	2.57	5.04	5.52	X		
	February	3	6	2	11	8%	3.67	2.37	4.59	5.02	X		
	March	5	2	5	12	9%	4.00	3.09	5.92	6.46	X		
	April	6	5	4	15	11%	5.00	2.57	5.30	5.82	X		
	May	1	5	3	9	6%	3.00	2.51.	4.81	5.25			
	June	3	7	5	15	11%	5.00	2.81	5.74	6.30	X		
	July	1	4	2	7	5%	2.33	2.60	4.96	5.42			
	August	4	5	6	15	11%	5.00	3.00	5.66	6.17	X		
	September	1	2	2	5	4%	1.67	2.48	4.92	5.39			
	October	8	2	5	15	11%	5.00	2.89	5.40	5.88	X		
	November	2	6	4	12	9%	4.00	2.41	4.85	5.32	X		
	December	5	5	3	13	9%	4.33	2.22	4.55	5.00	X		
DAY OF THE WEEK	Sunday	3	7	3	13	9%	4.33	4.00	6.58	7.08	X		
	Monday	3	3	5	11	8%	3.67	4.62	9.23	10.11			
	Tuesday	6	9	5	20	14%	6.67	4.46	7.81	8.46	X		
	Wednesday	8	7	11	26	19%	8.67	4.56	8.62	9.40	X	X	
	Thursday	10	6	7	23	16%	7.67	5.04	9.04	9.80	X		
	Friday	5	10	8	23	16%	7.67	4.86	9.39	10.26	X		
	Saturday	8	11	5	24	17%	8.00	3.98	8.10	8.89	X		
HOUR OF THE DAY	00:00-06:00	2	0	0	2	1%	0.67	3.79	8.65	9.58			
	06:00-09:00	9	8	8	25	18%	8.33	3.44	6.94	7.61	X	X	X
	09:00-11:00	3	4	1	8	6%	2.67	2.58	5.30	5.82	X		
	11:00-13:00	7	6	5	18	13%	6.00	3.12	5.78	6.29	X	X	
	13:00-15:00	6	9	3	18	13%	6.00	3.57	6.32	6.85	X		
	15:00-18:00	7	8	10	25	18%	8.33	6.38	11.52	12.50	X		
	18:00-24:00	9	18	17	44	31%	14.67	8.60	15.51	16.83	X		

	YEAR			3-Year
	1	2	3	Average
Average Daily Traffic ADT *(Vehicles per Day)*	74,393	75,911	77,460	75,921
Florida Average Crash rate *(Crashes per Million Entering Vehicles)*	0.579	0.568	0.566	0.571
Traffic Base	27.153	27.707	28.273	27.711
Actual Crash Rate *(Crashes per Million Entering Vehicles)*	1.584	1.913	1.556	1.684
Critical Crash Rate *(Crashes per Million Entering Vehicles)*	1.078	1.057	1.049	1.061
Safety Ratio	**1.469**	**1.810**	**1.483**	**1.587**
High Crash Location??	***YES***	***YES***	***YES***	***YES***

$$Actual\ \ Crash\ \ Rate = \frac{A \times 1{,}000{,}000}{V}$$

Where:
A = Total number of crashes or number of crashes by type occurring in a 1 year period.
V = Average Annual Daily Traffic X 365

$$CriticalCrashRate = AVR + \frac{0.5}{TB} + TF\sqrt{\frac{AVR}{TB}}$$

Where:
AVR = Average Statewide Crash Rate for a particular type of intersection or roadway segment.
TB = Traffic Base
TF = Test Factor (z-value)
= *1.96 (assume 95% Confidence Level for RURAL areas)*
= *3.29 (assume 99.95% Confidence Level for URBAN areas)*

$$Traffic\ Base = \frac{Years \times ADT \times 365}{1{,}000{,}000}$$

$$Safety\ \ Ratio = \frac{Actual\ \ Crash\ \ Rate}{Critical\ \ Crash\ \ Rate}$$

Confidence Level (%)	Constant Z
68.30	1.00
86.60	1.50
90.00	1.64
95.00	1.96
95.50	2.00
98.80	2.50
99.00	2.58
99.70	3.00
99.95	3.29

Table 27 – Abnormal Crash Details & Countermeasures NW 67 Avenue and NW 169 Street

NW 67 Avenue & NW 169 Street

(6 Lane x 4 Lane, Signalized, With Turn Lanes, 4 Leg Intersection -Table 35) - URBAN Spot

			NUMBER OF CRASHES YEAR			3 YEAR TOTAL CRASHE	% of Total	MEAN Accidents per Year	Possible Cause(s)	Counter-measure(s)
			2006	2007	2008					
Rear End	Total Rear End Crashes		20	25	18	63	100%	21.00	(1)	2
	Lighting Conditions	Day Light	15	19	14	48	76%	16.00	(3)	4
		Dawn	1	0	1	2	3%	0.67	(7)	7
		Dark	4	6	3	13	21%	4.33	(12)	
	Hours of Day	00:00 - 06:00	0	0	0	0	0%	0.00		
		06:00 - 09:00	3	6	3	12	19%	4.00		
		09:00 - 11:00	2	2	1	5	8%	1.67		
		11:00 - 13:00	3	1	1	5	8%	1.67		
		13:00 - 15:00	3	3	2	8	13%	2.67		
		15:00 - 18:00	5	4	6	15	24%	5.00		
		18:00 - 24:00	4	9	5	18	29%	6.00		
	Direction	North	3	9	6	18	29%	6.00		
		South	14	10	7	31	49%	10.33		
		East	3	5	3	11	17%	3.67		
		West	0	1	0	1	2%	0.33		
		Unknown	0	0	2	2	3%	0.67		

			NUMBER OF CRASHES YEAR			3 YEAR TOTAL CRASHE	% of Total	MEAN Accidents per Year	Possible Cause(s)	Counter-measure(s)
			2006	2007	2008					
Left Turn	Total Left Turn Crashes		7	12	14	33	100%	11.00	(9)	9
	Lighting Conditions	Day Light	3	9	9	21	64%	7.00	(13)	13
		Dawn	0	0	1	1	3%	0.33		17
		Dark	4	3	4	11	33%	3.67		
	Hours of Day	00:00 - 06:00	0	0	2	2	6%	0.67		
		06:00 - 09:00	2	0	0	2	6%	0.67		
		09:00 - 11:00	0	1	0	1	3%	0.33		
		11:00 - 13:00	3	1	3	7	21%	2.33		
		13:00 - 15:00	0	2	1	3	9%	1.00		
		15:00 - 18:00	0	3	3	6	18%	2.00		
		18:00 - 24:00	2	5	5	12	36%	4.00		
	Direction	NB → WB	5	2	1	8	24%	2.67		
		WB → SB	0	0	0	0	0%	0.00		
		SB → EB	2	10	12	24	73%	8.00		
		EB → NB	0	0	1	1	3%	0.33		
		Unknown	0	0	0	0	0%	0.00		

			NUMBER OF CRASHES YEAR			3 YEAR TOTAL CRASHE	% of Total	MEAN Accidents per Year	Possible Cause(s)	Counter-measure(s)
			2006	2007	2008					
Right Turn	Total Right Turn Crashes		3	1	2	6	100%	2.00	(8)	9
	Lighting Conditions	Day Light	3	1	1	5	83%	1.67	(9)	21
		Dawn	0	0	0	0	0%	0.00	(12)	
		Dark	0	0	1	1	17%	0.33		
	Hours of Day	00:00 - 06:00	0	0	0	0	0%	0.00		
		06:00 - 09:00	2	1	0	3	50%	1.00		
		09:00 - 11:00	0	0	0	0	0%	0.00		
		11:00 - 13:00	1	0	0	1	17%	0.33		
		13:00 - 15:00	0	0	1	1	17%	0.33		
		15:00 - 18:00	0	0	0	0	0%	0.00		
		18:00 - 24:00	0	0	1	1	17%	0.33		
	Direction	NB→EB	2	0	0	2	33%	0.67		
		EB→SB	1	1	2	4	67%	1.33		
		WB→NB	0	0	0	0	0%	0.00		
		SB→WB	0	0	0	0	0%	0.00		
		Unknown	0	0	0	0	0%	0.00		

			NUMBER OF CRASHES YEAR			3 YEAR TOTAL CRASHE	% of Total	MEAN Accidents per Year	Possible Cause(s)	Counter-measure(s)
			2006	2007	2008					
Sideswipe (Overtake)	Total Sideswipe Crashes		11	8	10	29	100%	9.67	(16)	19
	Lighting Conditions	Day Light	9	8	7	24	83%	8.00	(18)	20
		Dawn	1	0	0	1	3%	0.33	(19)	21
		Dark	1	0	3	4	14%	1.33	(20)	
	Hours of Day	00:00 - 06:00	1	0	0	1	3%	0.33	(21)	
		06:00 - 09:00	4	1	5	10	34%	3.33		
		09:00 - 11:00	1	1	0	2	7%	0.67		
		11:00 - 13:00	1	3	1	5	17%	1.67		
		13:00 - 15:00	2	1	1	4	14%	1.33		
		15:00 - 18:00	1	1	0	2	7%	0.67		
		18:00 - 24:00	1	1	3	5	17%	1.67		
	Direction	North	2	3	1	6	21%	2.00		
		South	8	5	6	19	66%	6.33		
		East	1	0	3	4	14%	1.33		
		West	0	0	0	0	0%	0.00		
		Unknown	0	0	0	0	0%	0.00		

3.11.3. Traffic Operation Conditions and Analysis

In order to identify the traffic operation characteristics and safety relevant conflicts, field observations at NW 67 Avenue and NW 169 Street were performed on a typical weekday on November 30, 2010. A summary of the traffic data is presented in *Figure 43*, and the field review is presented in *Figure 44*.

This intersection has single left-turn bays for all approaches except the northbound which has double left-turn lanes. The eastbound approach has double right-turn lanes. The signal operation is protected/permissive for all approaches left-turns except northbound double left-turn lanes which are protected only.

Traffic spilling back along the outer most southbound through/right lane was observed blocking the through traffic. The outer most lanes on the northbound and southbound directions act as auxiliary lanes for SR-826 on/off ramps. Those lanes are transitioned to or from a six-lane road by adding or dropping (merge) a lane for the southbound and northbound traffic about 300 feet north of the intersection, respectively.

Considerable lane changing (weaving) was noticed on the northbound and southbound approaches. Consequently, lack of advance warning signs for northbound/southbound traffic transitioning from the outer lanes was observed.

Vehicles from driveways located along the west side of the south leg were identified as potential conflict with southbound traffic.

Several vehicles were observed trapped in the middle of the intersection during the left-turn permissive phase along southbound approach. Also, there is an offset between the northbound and southbound approaches.

It was observed that the length of the queue for northbound/southbound left-turns also spilled over the through traffic.

The westbound has a sharp right-turn curve return radii that promotes vehicles to turn into receiving internal lanes. Also, there is no advance warning of the approaching signal due to the curvature of the east leg.

3.11.4. Recommendations

Based on the safety analysis, field observations and traffic operations for the intersection of NW 67 Avenue and NW 169 Street, the following is recommended:

- Lengthen the southbound left-turn lane to approximately 450 ft.
- Lengthen the eastbound and westbound left-turn lanes to approximately 300 ft each.
- Reducing the offset between northbound and southbound left turn lanes by reducing the north leg median width and creating a striped gore.

- Extending the distance between the intersection and the add/drop lane tapers along the north leg.
- Retiming/optimizing of the existing signal while maintaining cycle length for both the AM and PM peak hours.
- Smoothing the curve return radii for the westbound right-turn traffic.
- Installing "Signal Ahead" (W3-3) signs for eastbound and westbound approaches.
- Installing advance warning signs for adding and dropping lanes (W4-2) along the north leg.
- Installing regulatory signs to control northbound/southbound U-turns to yield to conflicting right-turns (R10-16).
- Providing pedestrian countdown signal heads and ADA approved pedestrian ramps.
- Providing sidewalks along the east leg of the intersection.
- Resurfacing the intersection.
- Refurbishing of pavement markings using thermoplastic painting.

A conceptual vision of the proposed roadway improvements is exhibited in *Figure 45*.

24-hr Approach Counts

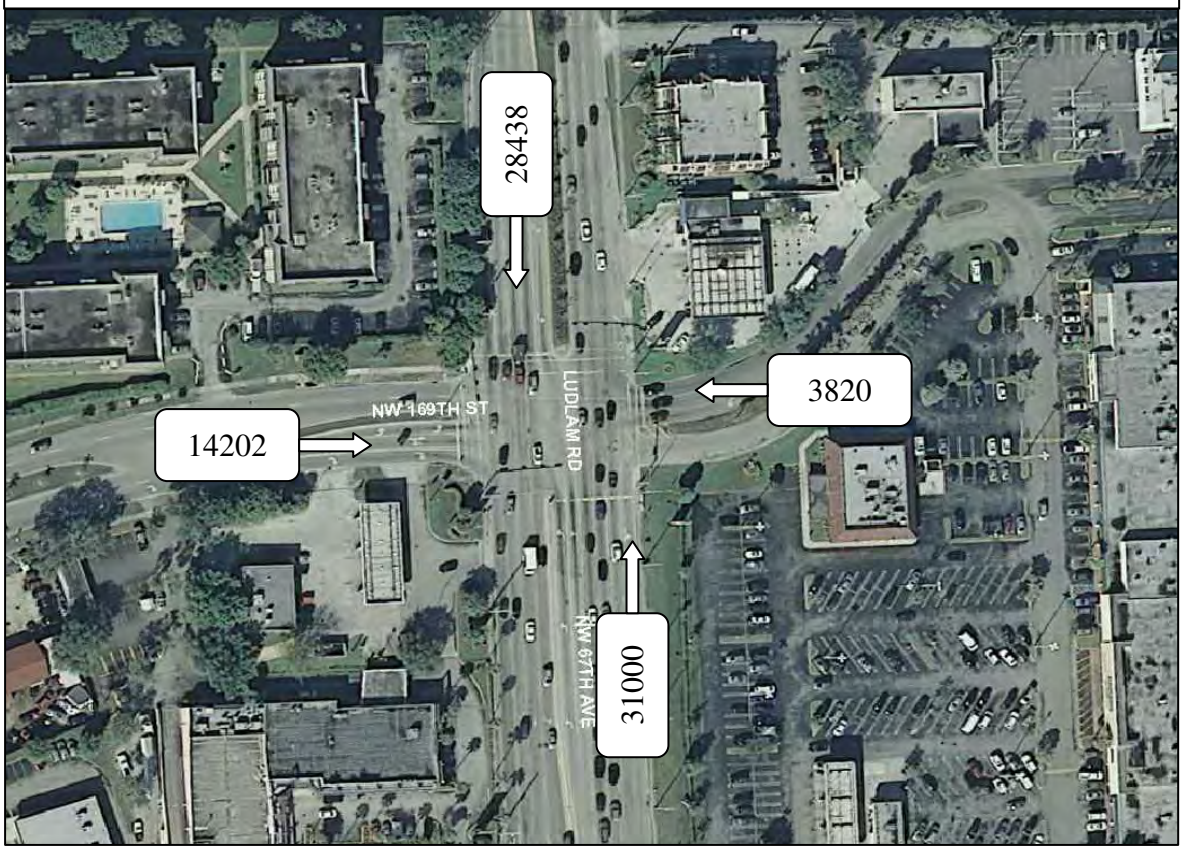

Turning Movement Counts (TMC)

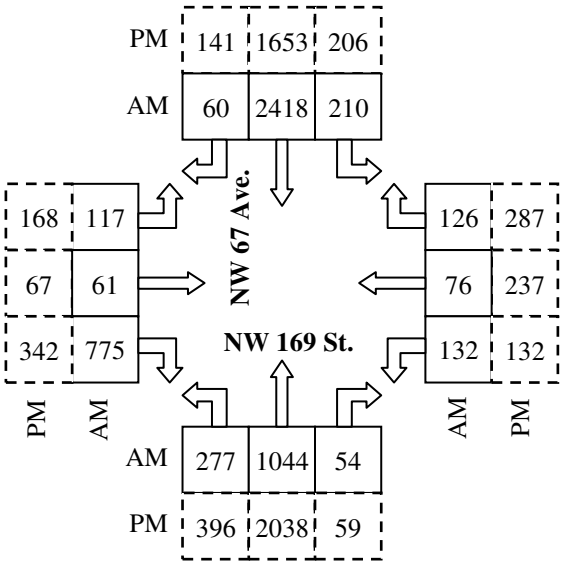

Figure 43: Traffic Data – *NW 67 Avenue and NW 169 Street*

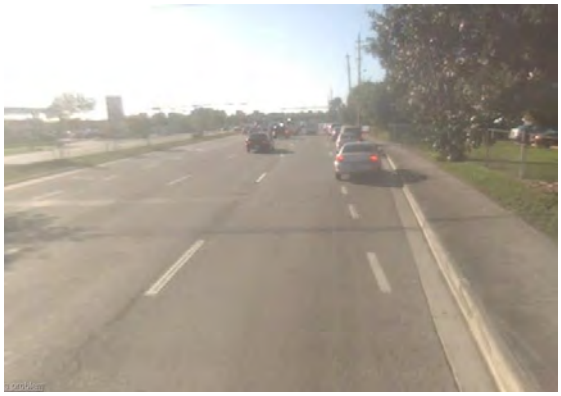

Southbound approach: Long queues of right-turn vehicles and no warning signs for adding lanes.

Northbound/Southbound: Left-turn lanes are not aligned to reduce the offset.

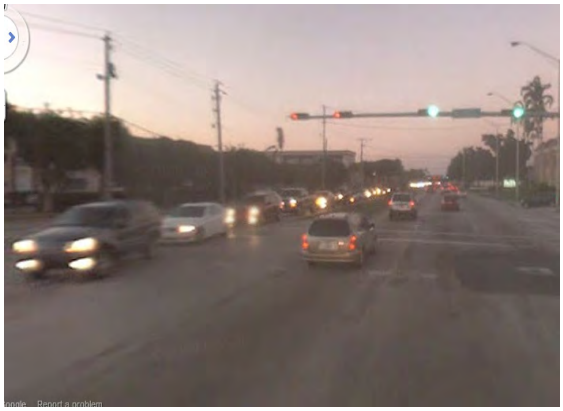

Southbound approach: Long queues of left-turn traffic.

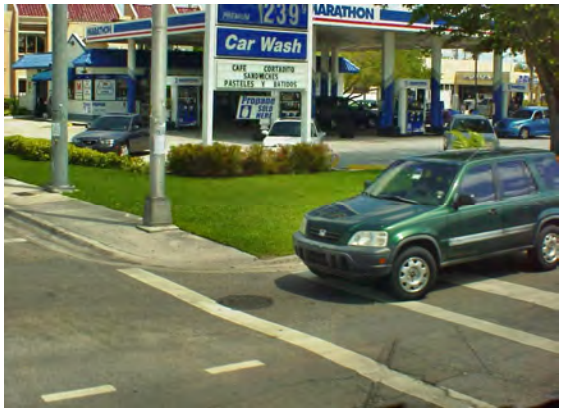

East leg: lack of ADA approved pedestrian ramps and sidewalks.

Eastbound approach: Substandard pavement markings.

Westbound approach: Faded pavement markings and deteriorated pavement conditions.

Figure 44: Field Review – *NW 67 Avenue and NW 169 Street*

Figure 45: Conceptual Plan – *NW 67 Avenue and NW 169 Street*

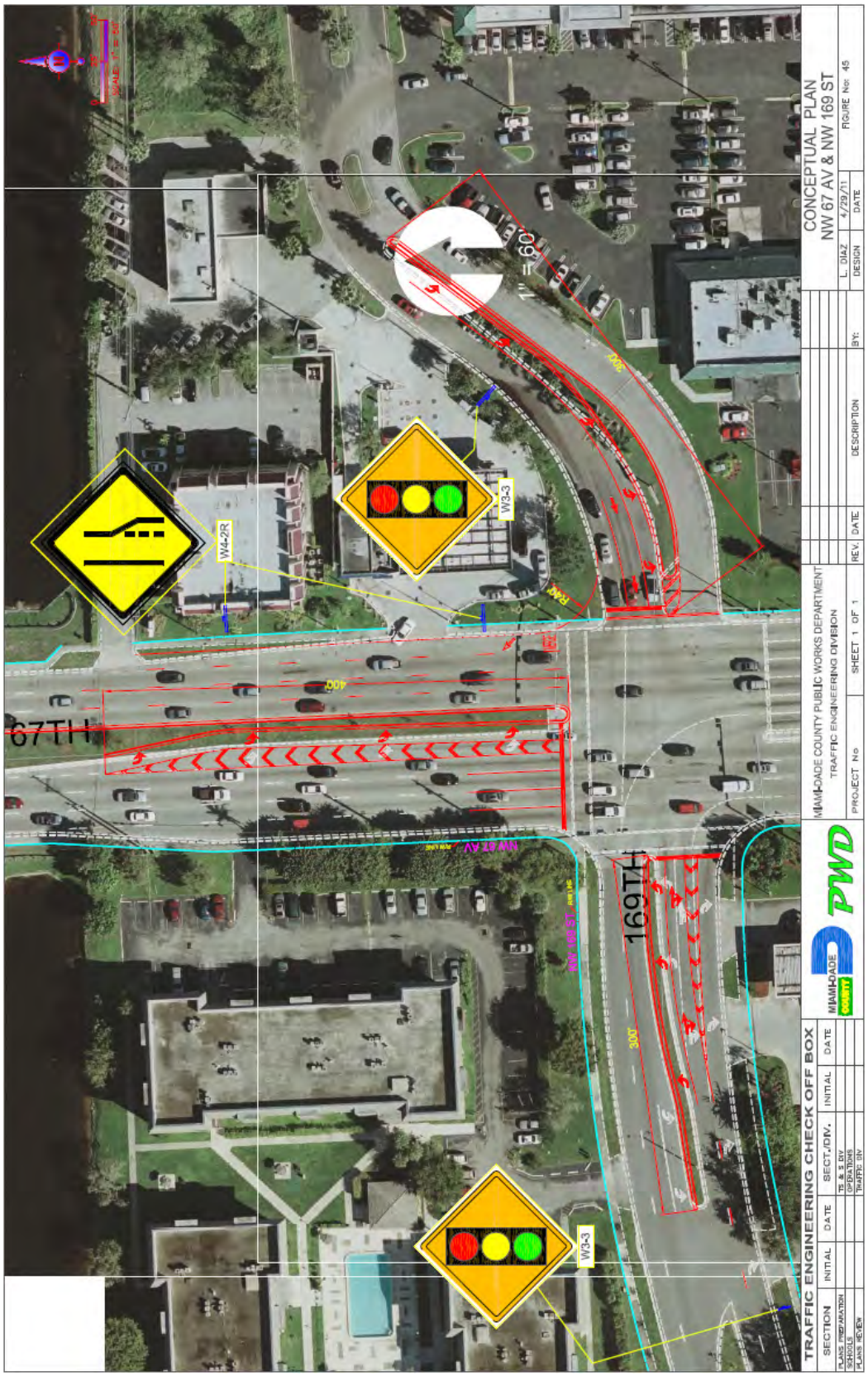

3.12. SW 147 Avenue and SW 104 Street

3.12.1. Site Description

This intersection is a signalized four legged intersection located in the unincorporated area of southwest Miami Dade County. SW 147 Avenue is a four lane major collector divided by a raised median that runs north-south, and SW 104 Street is a four lane urban arterial divided by a raised median that runs east-west.

3.12.2. Safety Conditions and Analysis

The intersection of SW 147 Avenue and SW 104 Street is ranked number 12 in our high crash locations list. A review of the hard copy police reports for the year 2006 through 2008 was performed. During the three-year analysis period, 81 relevant crashes occurred at the intersection. The analysis indicated that the average number of crashes per year is 27. The crash summaries, crash statistics and collision diagrams for the intersection are documented in *Appendix A*.

Based on the analysis of crash records for this intersection, the predominant types of crashes are shown in *Figure 46.*

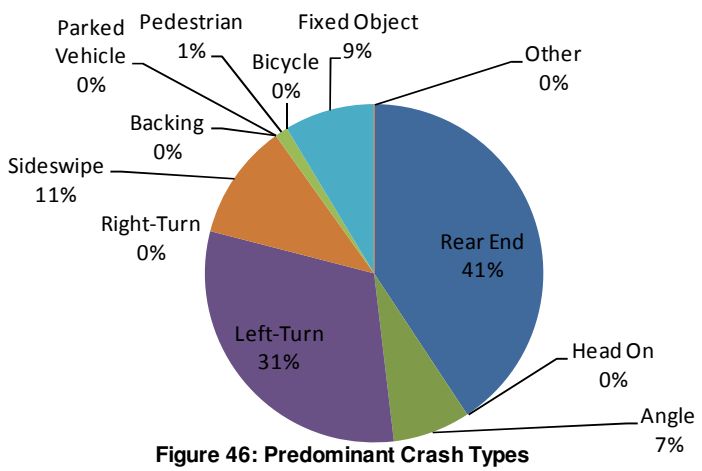

Figure 46: Predominant Crash Types SW 147 AVE & SW 104 ST

Calculated intersection mean crash per year were compared to the average Miami-Dade Crash Rate for County corridors to assess the safety conditions at the study intersection in relation to other roadways with similar traffic and geometric characteristics. This study is based on the 2007 FDOT's "Expected Value Analysis." *Table 28* illustrates the expected accident volume analysis of this intersection as well as the safety ratios and the confidence levels during the analysis period.

Based on a regression growth of 2% from the 2006 entering volume, the calculated safety ratios for the years 2006, 2007, and 2008 were 1.636, 1.201, and 1.900, respectively. The safety ratio for the three years averaged 1.579. Also, results of confidence level indicated that this intersection has been a high crash location during the three years with a confidence level higher than 99.95%.

From this analysis, it was determined that left-turn and fixed object collisions presented abnormal crash patterns that exceed the threshold limits for the 95th percentile and 90th percentile confidence level. Those results indicate that these types of collisions were abnormally high during the period of 2006 through 2008. A detailed review of the abnormal crashes as well as probable countermeasures is presented in *Table 29.*

Table 28 – Crash Analysis – SW 147 Avenue and SW 104 Street

SW 147 Avenue & SW 104 Street

(4 Lane x 4 Lane, Signalized, With Turn Lanes, 4 Leg Intersection-Table 28) - URBAN Spot

	TYPE OF CRASH	NUMBER OF CRASHES YEAR 2006	2007	2008	3 YEAR TOTAL CRASHE	% of Total	MEAN Accidents per Year	EXPECTED ANNUAL CRASH VALUE MEAN	90th Percentile	95th Percentile	ABNORMALLY HIGH CRASHES Mean	90th Percentil	95th Percentil
COLLISION TYPE	Rear End	9	11	13	33	20%	11.00	5.70	16.96	19.12	X		
	Head On	0	0	0	0	0%	0.00	0.33	1.02	1.15			
	Angle	1	1	4	6	3%	2.00	3.05	7.08	7.85			
	Left Turn	13	4	8	25	12%	8.33	1.67	4.02	4.47	X	X	X
	Right Turn	0	0	0	0	0%	0.00	0.33	1.25	1.42			
	Sideswipe	3	3	3	9	4%	3.00	1.60	4.64	5.22	X		
	Backed Into	0	0	0	0	0%	0.00	0.17	0.56	0.63			
	Coll. w/ Parked Car	0	0	0	0	0%	0.00	0.10	0.51	0.59			
	Coll. w/ Pedestrian	0	0	1	1	0%	0.33	0.28	1.04	1.19	X		
	Coll. w/ Bicycle	0	0	0	0	0%	0.00	0.09	0.33	0.38			
	Fixed Object	2	2	3	7	2%	2.33	0.03	0.21	0.24	X	X	X
	Ran Off Road	0	0	0	0	0%	0.00	0.00	0.00	0.00			
	Overtuned	0	0	0	0	0%	0.00	0.03	0.21	0.24			
	Other	0	0	0	0	0%	0.00	3.70	8.83	9.82			
	Total Crashes	28	21	32	81	24%	27.00	17.77	40.96	45.39	X		
SEVERITY	PDO crashes	22	19	25	66	81%	22.00	9.93	22.30	24.67	X		
	Fatal crashes	0	0	0	0	0%	0.00	0.05	0.26	0.29			
	Injury crashes	6	2	7	15	19%	5.00	13.14	33.08	36.90			
LIGHT CONDITIONS	Day Light	17	16	19	52	64%	17.33	12.40	29.18	32.39	X		
	Dusk	0	0	0	0	0%	0.00	0.28	0.87	0.98			
	Dawn	0	1	0	1	1%	0.33	0.17	0.56	0.63	X		
	Dark	11	4	13	28	35%	9.33	4.56	10.53	11.68	X		
	Unknown	0	0	0	0	0%	0.00	0.35	1.05	1.18			
SURFACE CONDITIONS	Dry	19	18	28	65	80%	21.67	15.30	34.45	38.12	X		
	Wet	2	3	4	9	11%	3.00	2.10	6.02	6.76	X		
	Others	7	0	0	7	9%	2.33	0.37	1.10	1.24	X	X	X
MONTH OF A YEAR	January	0	2	2	4	5%	1.33	1.42	3.33	3.69			
	February	2	1	2	5	6%	1.67	1.42	3.53	3.93	X		
	March	1	1	3	5	6%	1.67	1.67	4.12	4.59			
	April	4	1	2	7	9%	2.33	1.30	3.21	3.57	X		
	May	4	2	1	7	9%	2.33	1.74	4.46	4.99	X		
	June	1	1	1	3	4%	1.00	1.38	3.49	3.90			
	July	4	2	4	10	12%	3.33	1.35	3.22	3.58	X	X	
	August	2	2	2	6	7%	2.00	1.56	3.99	4.46	X		
	September	3	1	5	9	11%	3.00	1.46	3.73	4.16	X		
	October	4	2	4	10	12%	3.33	1.47	3.59	4.00	X		
	November	1	1	3	5	6%	1.67	1.39	3.53	3.94	X		
	December	2	5	3	10	12%	3.33	1.61	4.43	4.97	X		
DAY OF THE WEEK	Sunday	5	3	5	13	16%	4.33	1.46	3.47	3.85	X	X	X
	Monday	2	3	6	11	14%	3.67	2.70	6.42	7.13	X		
	Tuesday	4	6	1	11	14%	3.67	2.49	6.18	6.88	X		
	Wednesday	5	2	7	14	17%	4.67	2.56	5.84	6.47	X		
	Thursday	1	2	2	5	6%	1.67	2.88	7.20	8.03			
	Friday	7	2	7	16	20%	5.33	3.07	7.50	8.35	X		
	Saturday	4	3	4	11	14%	3.67	2.61	6.40	7.13	X		
HOUR OF THE DAY	00:00-06:00	6	1	3	10	12%	3.33	1.70	3.39	3.71	X		
	06:00-09:00	2	3	4	9	11%	3.00	1.98	5.12	5.72	X		
	09:00-11:00	1	3	2	6	7%	2.00	1.72	4.23	4.71	X		
	11:00-13:00	4	3	0	7	9%	2.33	2.40	6.30	7.05			
	13:00-15:00	3	2	6	11	14%	3.67	1.95	5.32	5.96	X		
	15:00-18:00	6	5	4	15	19%	5.00	3.58	7.81	8.62	X		
	18:00-24:00	6	4	13	23	28%	7.67	4.42	10.63	11.82	X		

	YEAR 1	2	3	3-Year Average
Average Daily Traffic ADT *(Vehicles per Day)*	51,405	51,405	51,405	51,405
Florida Average Crash rate *(Crashes per Million Entering Vehicles)*	0.420	0.424	0.394	0.413
Traffic Base	18.763	18.763	18.763	18.763
Actual Crash Rate *(Crashes per Million Entering Vehicles)*	1.492	1.119	1.706	1.439
Critical Crash Rate *(Crashes per Million Entering Vehicles)*	0.939	0.945	0.897	0.927
Safety Ratio	**1.589**	**1.184**	**1.900**	**1.558**
High Crash Location??	***YES***	***YES***	***YES***	***YES***

$$Actual\ \ Crash\ \ Rate = \frac{A \times 1{,}000{,}000}{V}$$

Where:
A = Total number of crashes or number of crashes by type occurring in a 1 year period.
V = Average Annual Daily Traffic X 365

$$CriticalCrashRate = AVR + \frac{0.5}{TB} + TF\sqrt{\frac{AVR}{TB}}$$

Where:
AVR = Average Statewide Crash Rate for a particular type of intersection or roadway segment.
TB = Traffic Base
TF = Test Factor (z-value)
= *1.96 (assume 95% Confidence Level for RURAL areas)*
= *3.29 (assume 99.95% Confidence Level for URBAN areas)*

$$Traffic\ Base = \frac{Years \times ADT \times 365}{1{,}000{,}000}$$

$$Safety\ \ Ratio = \frac{Actual\ \ Crash\ \ Rate}{Critical\ \ Crash\ \ Rate}$$

Confidence Level (%)	Constant Z
68.30	1.00
86.60	1.50
90.00	1.64
95.00	1.96
95.50	2.00
98.80	2.50
99.00	2.58
99.70	3.00
99.95	3.29

Table 29 – Abnormal Crash Details & Countermeasures SW 147 Avenue and SW 104 Street

SW 147 Avenue & SW 104 Street

(4 Lane x 4 Lane, Signalized, With Turn Lanes, 4 Leg Intersection-Table 28) - URBAN Spot

			NUMBER OF CRASHES YEAR 2006	2007	2008	3 YEAR TOTAL CRASHES	% of Total	MEAN Accidents per Year	Possible Cause(s)	Counter-measure(s)
Fixed Object	Total Fixed Objects Crashes		2	2	3	7	100%	2.33	(6)	12
	Lighting Conditions	Day Light	2	1	0	3	43%	1.00	(16)	20
		Dawn	0	0	0	0	0%	0.00	(17)	28
		Dark	0	1	3	4	57%	1.33	(25)	
	Hours of Day	00:00 - 06:00	0	1	0	1	14%	0.33		
		06:00 - 09:00	0	0	1	1	14%	0.33		
		09:00 - 11:00	0	1	0	1	14%	0.33		
		11:00 - 13:00	0	0	0	0	0%	0.00		
		13:00 - 15:00	1	0	0	1	14%	0.33		
		15:00 - 18:00	1	0	0	1	14%	0.33		
		18:00 - 24:00	0	0	2	2	29%	0.67		
	Direction	North	2	1	1	4	57%	1.33		
		South	0	1	1	2	29%	0.67		
		East	0	0	1	1	14%	0.33		
		West	0	0	0	0	0%	0.00		
		Unknown	0	0	0	0	0%	0.00		

			NUMBER OF CRASHES YEAR 2006	2007	2008	3 YEAR TOTAL CRASHES	% of Total	MEAN Accidents per Year	Possible Cause(s)	Counter-measure(s)
Left Turn	Total Left Turn Crashes		13	4	8	25	100%	8.33	(9)	9
	Lighting Conditions	Day Light	5	3	6	14	56%	4.67	(13)	13
		Dawn	0	0	0	0	0%	0.00		17
		Dark	8	1	2	11	44%	3.67		
	Hours of Day	00:00 - 06:00	2	0	0	2	8%	0.67		
		06:00 - 09:00	1	2	1	4	16%	1.33		
		09:00 - 11:00	2	0	1	3	12%	1.00		
		11:00 - 13:00	3	0	0	3	12%	1.00		
		13:00 - 15:00	1	0	1	2	8%	0.67		
		15:00 - 18:00	0	1	1	2	8%	0.67		
		18:00 - 24:00	4	1	4	9	36%	3.00		
	Direction	NB → WB	1	0	0	1	4%	0.33		
		WB → SB	6	2	3	11	44%	3.67		
		SB → EB	2	1	1	4	16%	1.33		
		EB → NB	4	1	4	9	36%	3.00		
		Unknown	0	0	0	0	0%	0.00		

3.12.3. Traffic Operation Conditions and Analysis

In order to identify the traffic operation characteristics and safety relevant conflicts, field observations at SW 147 Avenue and SW 104 Street were performed on a typical weekday on November 18, 2010. A summary of the traffic data is presented in *Figure 47*, and the field review is presented in *Figure 48*.

This intersection has single left-turn bays for all approaches. The signal operation is protected/permissive for all left-turns.

The intersection presents large offsets between all opposing left-turn bays where several permitted left-turn vehicles searching gaps in the opposing through traffic could be contained in the middle of the intersection. Higher potential conflicts between eastbound/westbound permitted left-turn movements and the opposing through traffic were noticed along SW 104 Street than SW 147 Avenue.

It was also noticed that the number of left-turn vehicles exceeds the storage capacity of the turn bays in all approaches and spills over the through lanes.

Red light running was observed at the intersection.

The landscape surroundings at the intersection, especially along the west leg present a conflict and should be modified.

3.12.4. Recommendations

Based on the safety analysis, field observations and traffic operations for the intersection of SW 147 Avenue and SW 104 Street, the following is recommended:

- Lengthen the northbound, southbound and eastbound left-turn lanes to approximately 300 ft. each.
- Lengthen the westbound left-turn lanes to approximately 200 ft.
- Reducing the offset between left turn lanes by reducing the median width and creating a striped gore at all approaches.
- Retiming/optimizing of the existing signal while maintaining cycle length for both the AM and PM peak hours.
- Providing crosswalks, pedestrian features and ADA approved pedestrian ramps at all legs.
- Modifying the landscape in the west leg to improve the sight distance.
- Refurbishing of pavement markings using thermoplastic painting.
- Improving lighting system at the intersection.

A conceptual vision of the proposed roadway improvements is exhibited in *Figure 49*.

24-hr Approach Counts

Turning Movement Counts (TMC)

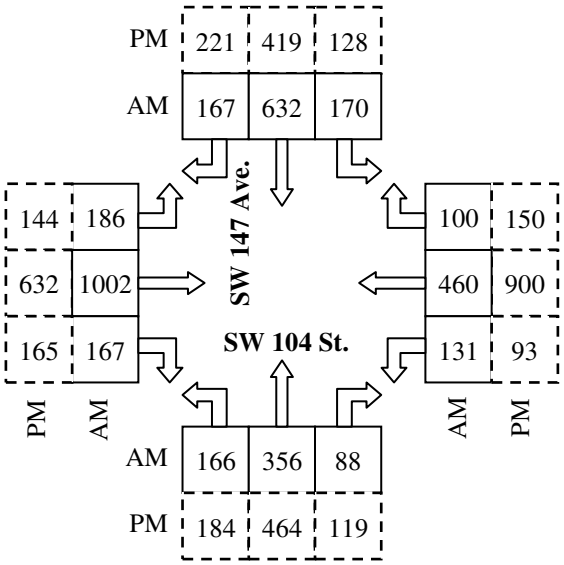

Figure 47: Traffic Data – *SW 147 Avenue and SW 104 Street*

Northbound/Southbound: Left-turn lanes are not aligned to reduce the offset.

Eastbound/Westbound: Left-turn lanes are not aligned to reduce the offset.

Northbound approach: Large number of left-turning vehicles.

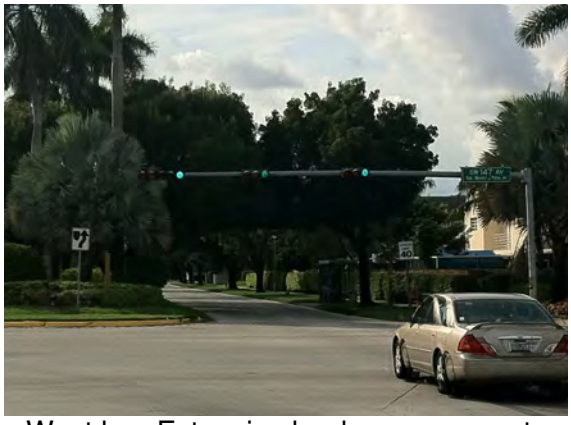

West leg: Extensive landscape presents conflict.

North leg: Lack of ADA approves pedestrian ramps and pedestrian features.

West leg: Faded pavement markings.

Figure 48: Field Review – *SW 147 Avenue and SW 104 Street*

Figure 49: Conceptual Plan – *SW 147 Avenue and SW 104 Street*

3.13. S. Hammocks Boulevard and SW 104 Street

3.13.1. Site Description

This intersection is a signalized four legged intersection located in the unincorporated area of southwest Miami Dade County. S. Hammocks Boulevard is a four lane collector divided by a raised median that runs north-south, and SW 104 Street is a four lane urban arterial divided by a raised median that runs east-west.

3.13.2. Safety Conditions and Analysis

The intersection of S. Hammocks Boulevard and SW 104 Street is ranked number 13 in our high crash locations list. A review of the hard copy police reports for the year 2006 through 2008 was performed. During the three-year analysis period, 63 relevant crashes occurred at the intersection. The analysis indicated that the average number of crashes per year is 21. The crash summaries, crash statistics and collision diagrams for the intersection are documented in *Appendix A*.

Based on the analysis of crash records for this intersection, the predominant types of crashes are shown in *Figure 50.*

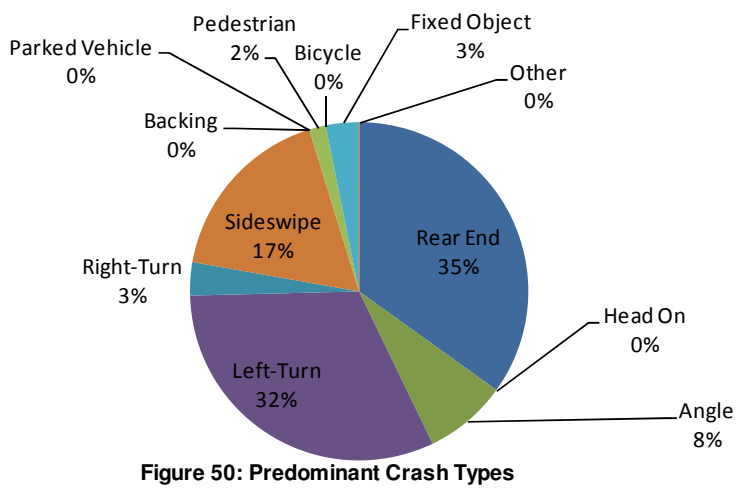

Figure 50: Predominant Crash Types S. Hammocks BLVD & SW 104 ST

Calculated intersection mean crash per year were compared to the average Miami-Dade Crash Rate for County corridors to assess the safety conditions at the study intersection in relation to other roadways with similar traffic and geometric characteristics. This study is based on the 2007 FDOT's "Expected Value Analysis." *Table 30* illustrates the expected accident volume analysis of this intersection as well as the safety ratios and the confidence levels during the analysis period.

Based on a regression growth of 2% from the 2006 entering volume, the calculated safety ratios for the years 2006, 2007, and 2008 were 1.822, 1.562, and 1.388, respectively. The safety ratio for the three years averaged 1.591. Also, results of confidence level indicated that this intersection has been a high crash location during the three years with a confidence level higher than 99.95%.

From this analysis, it was determined that left-turn and fixed object collisions presented abnormal crash patterns that exceed the threshold limits for the 95th percentile and 90th percentile confidence level. Those results indicate that these types of collisions were abnormally high during the period of 2006 through 2008. A detailed review of the abnormal crashes as well as probable countermeasures is presented in *Table 31*.

Table 30 – Crash Analysis – S. Hammocks Boulevard and SW 104 Street

Hammocks Blvd & SW 104 Street

(4 Lane x 4 Lane, Signalized, With Turn Lanes, 4 Leg Intersection-Divided-Table28) - URBAN Spot

	TYPE OF CRASH	NUMBER OF CRASHES YEAR 2006	2007	2008	3 YEAR TOTAL CRASHE	% of Total	MEAN Accidents per Year	EXPECTED ANNUAL CRASH VALUE MEAN	90th Percentile	95th Percentile	ABNORMALLY HIGH CRASHES Mean	90th Percentil	95th Percentil
COLLISION TYPE	Rear End	7	8	7	22	17%	7.33	5.70	16.96	19.12	X		
	Head On	0	0	0	0	0%	0.00	0.33	1.02	1.15			
	Angle	1	1	3	5	3%	1.67	3.05	7.08	7.85			
	Left Turn	6	9	5	20	12%	6.67	1.67	4.02	4.47	X	X	X
	Right Turn	1	1	0	2	1%	0.67	0.33	1.25	1.42	X		
	Sideswipe	6	2	3	11	6%	3.67	1.60	4.64	5.22	X		
	Backed Into	0	0	0	0	0%	0.00	0.17	0.56	0.63			
	Coll. w/ Parked Car	0	0	0	0	0%	0.00	0.10	0.51	0.59			
	Coll. w/ Pedestrian	1	0	0	1	1%	0.33	0.28	1.04	1.19	X		
	Coll. w/ Bicycle	0	0	0	0	0%	0.00	0.09	0.33	0.38			
	Fixed Object	2	0	0	2	1%	0.67	0.03	0.21	0.24	X	X	X
	Ran Off Road	0	0	0	0	0%	0.00	0.00	0.00	0.00			
	Overtuned	0	0	0	0	0%	0.00	0.03	0.21	0.24			
	Other	0	0	0	0	0%	0.00	3.70	8.83	9.82			
	Total Crashes	24	21	18	63	23%	21.00	17.77	40.96	45.39	X		
SEVERITY	PDO crashes	19	17	16	52	83%	17.33	9.93	22.30	24.67	X		
	Fatal crashes	0	0	0	0	0%	0.00	0.05	0.26	0.29			
	Injury crashes	5	4	2	11	17%	3.67	13.14	33.08	36.90			
LIGHT CONDITIONS	Day Light	16	8	11	35	56%	11.67	12.40	29.18	32.39			
	Dusk	0	1	1	2	3%	0.67	0.28	0.87	0.98	X		
	Dawn	0	1	0	1	2%	0.33	0.17	0.56	0.63	X		
	Dark	8	11	6	25	40%	8.33	4.56	10.53	11.68	X		
	Unknown	0	0	0	0	0%	0.00	0.35	1.05	1.18			
SURFACE CONDITIONS	Dry	10	17	15	42	67%	14.00	15.30	34.45	38.12			
	Wet	1	4	3	8	13%	2.67	2.10	6.02	6.76	X		
	Others	13	0	0	13	21%	4.33	0.37	1.10	1.24	X	X	X
MONTH OF A YEAR	January	1	0	0	1	2%	0.33	1.42	3.33	3.69			
	February	4	1	3	8	13%	2.67	1.42	3.53	3.93	X		
	March	5	5	1	11	17%	3.67	1.67	4.12	4.59	X		
	April	3	2	2	7	11%	2.33	1.30	3.21	3.57	X		
	May	4	2	2	8	13%	2.67	1.74	4.46	4.99	X		
	June	0	2	1	3	5%	1.00	1.38	3.49	3.90			
	July	1	2	3	6	10%	2.00	1.35	3.22	3.58	X		
	August	2	2	2	6	10%	2.00	1.56	3.99	4.46	X		
	September	1	4	0	5	8%	1.67	1.46	3.73	4.16	X		
	October	2	0	0	2	3%	0.67	1.47	3.59	4.00			
	November	1	1	2	4	6%	1.33	1.39	3.53	3.94			
	December	0	0	2	2	3%	0.67	1.61	4.43	4.97			
DAY OF THE WEEK	Sunday	3	2	0	5	8%	1.67	1.46	3.47	3.85	X		
	Monday	3	3	7	13	21%	4.33	2.70	6.42	7.13	X		
	Tuesday	7	4	3	14	22%	4.67	2.49	6.18	6.88	X		
	Wednesday	2	3	1	6	10%	2.00	2.56	5.84	6.47			
	Thursday	4	1	3	8	13%	2.67	2.88	7.20	8.03			
	Friday	3	5	4	12	19%	4.00	3.07	7.50	8.35	X		
	Saturday	2	3	0	5	8%	1.67	2.61	6.40	7.13			
HOUR OF THE DAY	00:00-06:00	0	1	2	3	5%	1.00	1.70	3.39	3.71			
	06:00-09:00	1	0	1	2	3%	0.67	1.98	5.12	5.72			
	09:00-11:00	0	1	1	2	3%	0.67	1.72	4.23	4.71			
	11:00-13:00	4	2	2	8	13%	2.67	2.40	6.30	7.05	X		
	13:00-15:00	2	1	3	6	10%	2.00	1.95	5.32	5.96	X		
	15:00-18:00	8	3	4	15	24%	5.00	3.58	7.81	8.62	X		
	18:00-24:00	9	13	5	27	43%	9.00	4.42	10.63	11.82	X		

	YEAR 1	2	3	3-Year Average
Average Daily Traffic ADT *(Vehicles per Day)*	33,810	34,500	35,204	34,505
Florida Average Crash rate *(Crashes per Million Entering Vehicles)*	0.420	0.424	0.394	0.413
Traffic Base	12.341	12.592	12.849	12.594
Actual Crash Rate *(Crashes per Million Entering Vehicles)*	1.945	1.668	1.401	1.671
Critical Crash Rate *(Crashes per Million Entering Vehicles)*	1.067	1.067	1.009	1.048
Safety Ratio	**1.822**	**1.562**	**1.388**	**1.591**
High Crash Location??	***YES***	***YES***	***YES***	***YES***

$$Actual\ \ Crash\ \ Rate = \frac{A \times 1{,}000{,}000}{V}$$

Where:
A = Total number of crashes or number of crashes by type occurring in a 1 year period.
V = Average Annual Daily Traffic X 365

$$CriticalCrashRate = AVR + \frac{0.5}{TB} + TF\sqrt{\frac{AVR}{TB}}$$

Where:
AVR = Average Statewide Crash Rate for a particular type of intersection or roadway segment.
TB = Traffic Base
TF = Test Factor (z-value)
= *1.96 (assume 95% Confidence Level for RURAL areas)*
= *3.29 (assume 99.95% Confidence Level for URBAN areas)*

$$Traffic\ Base = \frac{Years \times ADT \times 365}{1{,}000{,}000}$$

$$Safety\ \ Ratio = \frac{Actual\ \ Crash\ \ Rate}{Critical\ \ Crash\ \ Rate}$$

Confidence Level (%)	Constant Z
68.30	1.00
86.60	1.50
90.00	1.64
95.00	1.96
95.50	2.00
98.80	2.50
99.00	2.58
99.70	3.00
99.95	3.29

Table 31 – Abnormal Crash Details & Countermeasures S. Hammocks Boulevard and SW 104 Street

Hammocks Blvd & SW 104 Street

(4 Lane x 4 Lane, Signalized, With Turn Lanes, 4 Leg Intersection-Divided-Table28) - URBAN Spot

			NUMBER OF CRASHES YEAR			3 YEAR TOTAL CRASHE	% of Total	MEAN Accidents per Year	Possible Cause(s)	Counter-measure(s)
			2006	2007	2008					
Left Turn	Total Left Turn Crashes		**6**	**9**	**5**	**20**	**100%**	**6.67**	(6)	9
	Lighting Conditions	Day Light	4	4	1	9	45%	3.00	(9)	12
		Dawn	0	0	0	0	0%	0.00	(13)	13
		Dark	2	5	4	11	55%	3.67		
	Hours of Day	00:00 - 06:00	0	0	0	0	0%	0.00		
		06:00 - 09:00	0	0	0	0	0%	0.00		
		09:00 - 11:00	0	0	0	0	0%	0.00		
		11:00 - 13:00	1	1	1	3	15%	1.00		
		13:00 - 15:00	1	0	1	2	10%	0.67		
		15:00 - 18:00	2	1	1	4	20%	1.33		
		18:00 - 24:00	2	7	2	11	55%	3.67		
	Direction	NB → WB	0	1	0	1	5%	0.33		
		WB → SB	1	6	2	9	45%	3.00		
		SB → EB	3	0	1	4	20%	1.33		
		EB → NB	2	2	2	6	30%	2.00		
		Unknown	0	0	0	0	0%	0.00		

			NUMBER OF CRASHES YEAR			3 YEAR TOTAL CRASHE	% of Total	MEAN Accidents per Year	Possible Cause(s)	Counter-measure(s)
			2006	2007	2008					
Fixed Object	Total Fixed Object Crashes		**2**	**0**	**0**	**2**	**100%**	**0.67**	(2)	5
	Lighting Conditions	Day Light	1	0	0	1	50%	0.33	(6)	12
		Dawn	0	0	0	0	0%	0.00	(17)	17
		Dark	1	0	0	1	50%	0.33		
	Hours of Day	00:00 - 06:00	0	0	0	0	0%	0.00		
		06:00 - 09:00	0	0	0	0	0%	0.00		
		09:00 - 11:00	0	0	0	0	0%	0.00		
		11:00 - 13:00	0	0	0	0	0%	0.00		
		13:00 - 15:00	0	0	0	0	0%	0.00		
		15:00 - 18:00	1	0	0	1	50%	0.33		
		18:00 - 24:00	1	0	0	1	50%	0.33		
	Direction	North	0	0	0	0	0%	0.00		
		South	1	0	0	1	50%	0.33		
		East	1	0	0	1	50%	0.33		
		West	0	0	0	0	0%	0.00		
		Unknown	0	0	0	0	0%	0.00		

3.13.3. Traffic Operation Conditions and Analysis

In order to identify the traffic operation characteristics and safety relevant conflicts, field observations at S. Hammocks Boulevard and SW 104 Street were performed on a typical weekday on November 18, 2010. A summary of the traffic data is presented in *Figure 51*, and the field review is presented in *Figure 52*.

This intersection has single left-turn bays for all approaches. The signal operation is protected/permissive for all left-turns.

The intersection presents large offsets between eastbound/westbound opposing left-turn bays where several permitted left-turn vehicles searching gaps in the opposing through traffic could be contained in the middle of the intersection. Higher potential conflicts between eastbound/westbound permitted left-turn movements and the opposing through traffic were noticed along the intersection.

It was also noticed that the number of left-turn vehicles exceeds the storage capacity of the turn bays in eastbound and westbound approaches and spills over the through lanes.

Lack of lighting was observed at the intersection.

The driveways at the northeast corner and the corresponding median openings present conflict between the vehicles in/out of the driveway and the through traffic.

3.13.4. Recommendations

Based on the safety analysis, field observations and traffic operations for the intersection of S. Hammocks Boulevard and SW 104 Street, the following is recommended:

- Lengthen the eastbound left-turn lane to approximately 300 ft and closing the median opening.
- Lengthen the westbound left-turn lane to approximately 450 ft.
- Reducing the offset between eastbound/westbound left turn lanes by reducing the median width and creating a striped gore at all approaches.
- Retiming/optimizing of the existing signal while maintaining cycle length for both the AM and PM peak hours.
- Modifying the median noses for north/south legs to provide clear pedestrian paths.
- Installing curve warning (W1-2R) and signal ahead (W3-3) signs for northbound approach.
- Resurfacing the intersection.
- Refurbishing of pavement markings using thermoplastic painting.
- Improving lighting system at the intersection.

A conceptual vision of the proposed roadway improvements is exhibited in *Figure 53*.

24-hr Approach Counts

Turning Movement Counts (TMC)

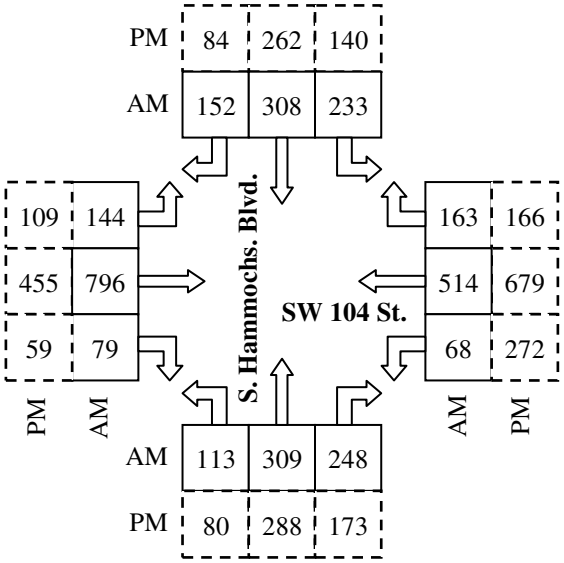

Figure 51: Traffic Data – *S. Hammocks Boulevard and SW 104 Street*

Eastbound approach: Wide median and visual obstruction to the left-turning traffic.

Westbound approach: Heavy through traffic blocking access to the Left-turn lanes.

South Leg: Median nose obstructing the crosswalks.

Northbound approach: No warning signs on the curve approaching a traffic signal.

South leg: Substandard Pedestrian ramps and signs.

Faded pavement markings.

Figure 52: Field Review – *S. Hammocks Boulevard and SW 104 Street*

Figure 53: Conceptual Plan – *S. Hammocks Boulevard and SW 104 Street*

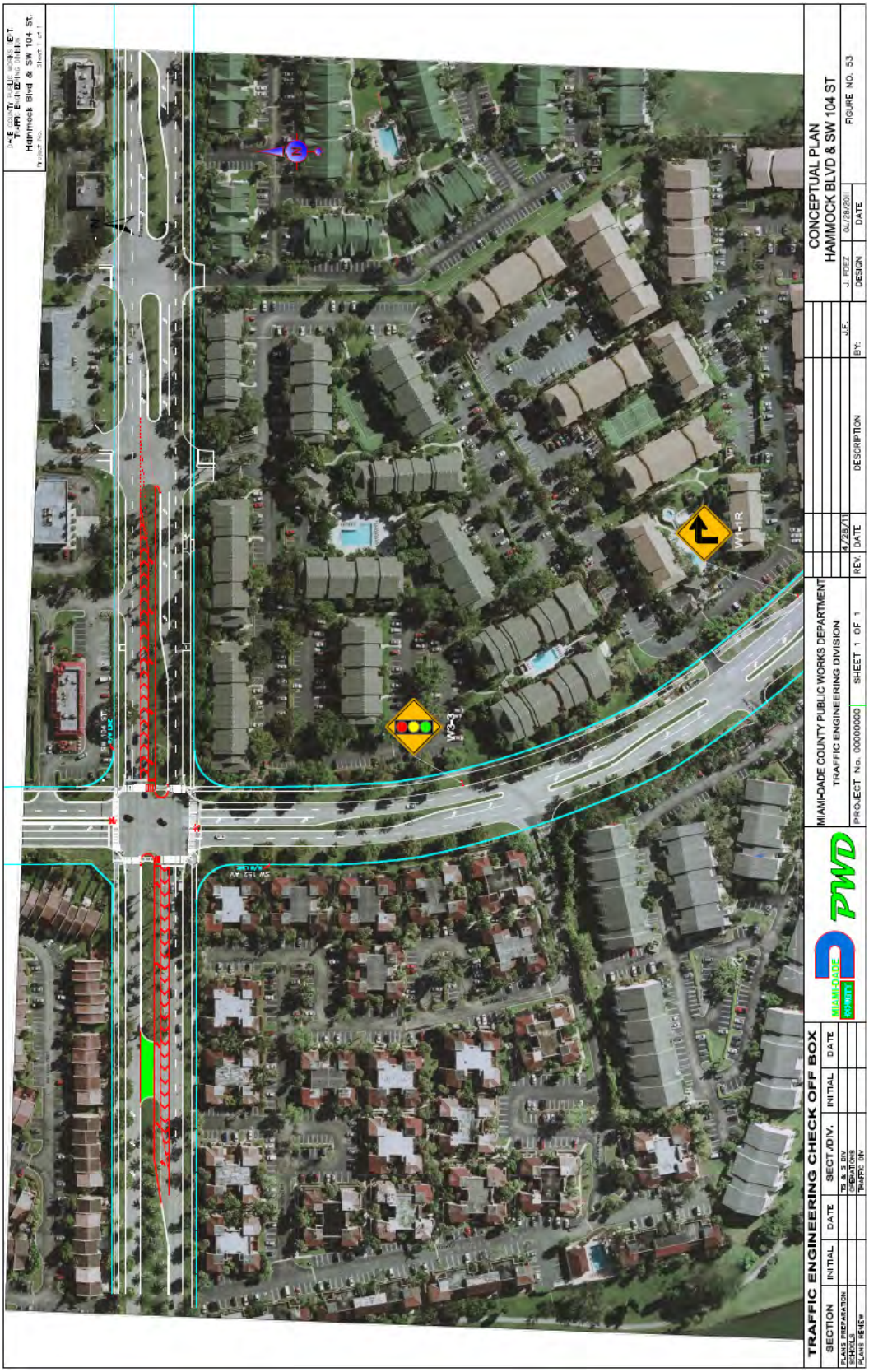

3.14. NW 87 Avenue and NW 25 Street

3.14.1. Site Description

This intersection is a signalized four legged intersection located in the northwest part of Miami Dade County in the City of Doral. NW 87 Avenue is a four lane urban arterial divided by a raised median that runs north-south, and NW 25 Street is a six lane urban arterial divided by a paved median that runs east-west.

3.14.2. Safety Conditions and Analysis

The intersection of NW 87 Avenue and NW 25 Street is ranked number 14 in our high crash locations list. A review of the hard copy police reports for the years 2006 through 2008 was performed. During the three-year analysis period, 122 relevant crashes occurred at the intersection. The analysis indicated that the average number of crashes per year is 41. The crash summaries, crash statistics and collision diagrams for the intersection are documented in *Appendix A*.

Based on the analysis of crash records for this intersection, the predominant types of crashes are shown in *Figure 54.*

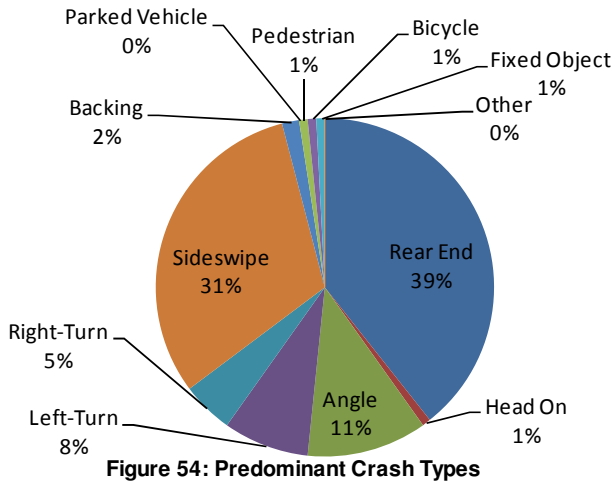

Figure 54: Predominant Crash Types NW 87 AVE & NW 25 ST

Calculated intersection mean crash per year were compared to the average Miami-Dade Crash Rate for County corridors to assess the safety conditions at the study intersection in relation to other roadways with similar traffic and geometric characteristics. This study is based on the 2007 FDOT's "Expected Value Analysis." *Table 32* illustrates the expected accident volume analysis of this intersection as well as the safety ratios and the confidence levels during the analysis period.

Based on a regression growth of 2% from the 2006 entering volume, the calculated safety ratios for the years 2006, 2007, and 2008 were 1.493, 1.798, and 2.037, respectively. The safety ratio for the three years averaged 1.776. Also, results of confidence level indicated that this intersection has been a high crash location during the three years with a confidence level higher than 99.95%.

From this analysis, it was determined that right-turn and sideswipe collisions presented abnormal crash patterns that exceed the threshold limits for the 95th percentile and 90th percentile confidence level. Those results indicate that these types of collisions were abnormally high during the period of 2006 through 2008. A detailed review of the abnormal crashes as well as probable countermeasures is presented in *Table 33*.

Table 32 – Crash Analysis – NW 87 Avenue and NW 25 Street

NW 87 Avenue & NW 25 Street

(6 Lane x 4 Lane, Signalized, With Turn Lanes, 4 Leg Intersection -Table 35) - URBAN Spot

	TYPE OF CRASH	NUMBER OF CRASHES YEAR 2006	2007	2008	3 YEAR TOTAL CRASHE	% of Total	MEAN Accidents per Year	EXPECTED ANNUAL CRASH VALUE MEAN	90th Percentile	95th Percentile	ABNORMALLY HIGH CRASHES Mean	90th Percentil	95th Percentil
COLLISION TYPE	Rear End	12	20	16	48	20%	16.00	8.68	17.26	18.90	X		
	Head On	1	0	0	1	0%	0.33	0.60	1.64	1.84			
	Angle	5	3	6	14	5%	4.67	5.40	9.19	9.92			
	Left Turn	3	1	6	10	3%	3.33	3.00	6.13	6.73	X		
	Right Turn	1	3	2	6	2%	2.00	0.46	1.36	1.53	X	X	X
	Sideswipe	11	13	14	38	10%	12.67	2.58	4.92	5.37	X	X	X
	Backed Into	0	1	1	2	1%	0.67	0.28	0.84	0.94	X		
	Coll. w/ Parked Car	0	0	0	0	0%	0.00	0.12	0.57	0.65			
	Coll. w/ Pedestrian	0	0	1	1	0%	0.33	0.74	1.80	2.00			
	Coll. w/ Bicycle	0	0	1	1	0%	0.33	0.14	0.49	0.55	X		
	Fixed Object	1	0	0	1	0%	0.33	0.79	2.01	2.24			
	Ran Off Road	0	0	0	0	0%	0.00	0.01	0.11	0.13			
	Overtuned	0	0	0	0	0%	0.00	0.04	0.28	0.33			
	Other	0	0	0	0	0%	0.00	8.67	21.05	23.42			
	Total Crashes	34	41	47	122	24%	40.67	31.51	54.94	59.43	X		
SEVERITY	PDO crashes	34	40	42	116	95%	38.67	19.21	36.95	40.35	X	X	
	Fatal crashes	0	0	0	0	0%	0.00	0.16	0.56	0.63			
	Injury crashes	0	1	5	6	5%	2.00	20.77	38.34	41.71			
LIGHT CONDITIONS	Day Light	26	36	37	99	81%	33.00	19.89	35.12	38.03	X		
	Dusk	0	1	0	1	1%	0.33	0.61	1.43	1.58			
	Dawn	0	0	0	0	0%	0.00	0.38	1.03	1.16			
	Dark	8	4	10	22	18%	7.33	10.22	18.94	20.61			
	Unknown	0	0	0	0	0%	0.00	0.41	1.15	1.30			
SURFACE CONDITIONS	Dry	26	35	43	104	85%	34.67	26.41	45.71	49.41	X		
	Wet	2	6	3	11	9%	3.67	4.41	8.78	9.62			
	Others	6	0	1	7	6%	2.33	0.69	1.88	2.11	X	X	X
MONTH OF A YEAR	January	3	2	1	6	5%	2.00	2.57	5.04	5.52			
	February	4	3	4	11	9%	3.67	2.37	4.59	5.02	X		
	March	2	6	3	11	9%	3.67	3.09	5.92	6.46	X		
	April	2	4	4	10	8%	3.33	2.57	5.30	5.82	X		
	May	1	1	5	7	6%	2.33	2.51.	4.81	5.25			
	June	0	9	6	15	12%	5.00	2.81	5.74	6.30	X		
	July	4	3	3	10	8%	3.33	2.60	4.96	5.42	X		
	August	4	3	4	11	9%	3.67	3.00	5.66	6.17	X		
	September	4	0	6	10	8%	3.33	2.48	4.92	5.39	X		
	October	3	4	5	12	10%	4.00	2.89	5.40	5.88	X		
	November	4	3	4	11	9%	3.67	2.41	4.85	5.32	X		
	December	3	3	2	8	7%	2.67	2.22	4.55	5.00	X		
DAY OF THE WEEK	Sunday	1	2	3	6	5%	2.00	4.00	6.58	7.08			
	Monday	8	9	10	27	22%	9.00	4.62	9.23	10.11	X		
	Tuesday	4	4	3	11	9%	3.67	4.46	7.81	8.46			
	Wednesday	5	10	9	24	20%	8.00	4.56	8.62	9.40	X		
	Thursday	2	8	7	17	14%	5.67	5.04	9.04	9.80	X		
	Friday	9	6	12	27	22%	9.00	4.86	9.39	10.26	X		
	Saturday	5	2	3	10	8%	3.33	3.98	8.10	8.89			
HOUR OF THE DAY	00:00-06:00	2	1	4	7	6%	2.33	3.79	8.65	9.58			
	06:00-09:00	8	1	9	18	15%	6.00	3.44	6.94	7.61	X		
	09:00-11:00	4	5	6	15	12%	5.00	2.58	5.30	5.82	X		
	11:00-13:00	3	5	4	12	10%	4.00	3.12	5.78	6.29	X		
	13:00-15:00	7	4	6	17	14%	5.67	3.57	6.32	6.85	X		
	15:00-18:00	6	13	13	32	26%	10.67	6.38	11.52	12.50	X		
	18:00-24:00	4	12	5	21	17%	7.00	8.60	15.51	16.83			

	YEAR 1	2	3	3-Year Average
Average Daily Traffic ADT *(Vehicles per Day)*	53,217	54,303	55,411	54,310
Florida Average Crash rate *(Crashes per Million Entering Vehicles)*	0.579	0.568	0.566	0.571
Traffic Base	19.424	19.821	20.225	19.823
Actual Crash Rate *(Crashes per Million Entering Vehicles)*	1.750	2.069	2.324	2.048
Critical Crash Rate *(Crashes per Million Entering Vehicles)*	1.173	1.150	1.141	1.155
Safety Ratio	**1.493**	**1.798**	**2.037**	**1.776**
High Crash Location??	***YES***	***YES***	***YES***	***YES***

$$Actual\ \ Crash\ \ Rate = \frac{A \times 1{,}000{,}000}{V}$$

Where:
A = Total number of crashes or number of crashes by type occurring in a 1 year period.
V = Average Annual Daily Traffic X 365

$$CriticalCrashRate = AVR + \frac{0.5}{TB} + TF\sqrt{\frac{AVR}{TB}}$$

Where:
AVR = Average Statewide Crash Rate for a particular type of intersection or roadway segment.
TB = Traffic Base
TF = Test Factor (z-value)
= *1.96 (assume 95% Confidence Level for RURAL areas)*
= *3.29 (assume 99.95% Confidence Level for URBAN areas)*

$$Traffic\ Base = \frac{Years \times ADT \times 365}{1{,}000{,}000}$$

$$Safety\ \ Ratio = \frac{Actual\ \ Crash\ \ Rate}{Critical\ \ Crash\ \ Rate}$$

Confidence Level (%)	Constant Z
68.30	1.00
86.60	1.50
90.00	1.64
95.00	1.96
95.50	2.00
98.80	2.50
99.00	2.58
99.70	3.00
99.95	3.29

Table 33 – Abnormal Crash Details & Countermeasures NW 87 Avenue and NW 25 Street

NW 87 Avenue & NW 25 Street

(6 Lane x 4 Lane, Signalized, With Turn Lanes, 4 Leg Intersection -Table 35) - URBAN Spot

			NUMBER OF CRASHES YEAR 2006	2007	2008	3 YEAR TOTAL CRASHES	% of Total	MEAN Accidents per Year	Possible Cause(s)	Counter-measure(s)
Right Turn	Total Right Turn Crashes		1	3	2	6	100%	2.00	(8)	13
	Lighting Conditions	Day Light	1	3	2	6	100%	2.00	(9)	21
		Dawn	0	0	0	0	0%	0.00	(13)	
		Dark	0	0	0	0	0%	0.00		
	Hours of Day	00:00 - 06:00	0	0	0	0	0%	0.00		
		06:00 - 09:00	1	1	0	2	33%	0.67		
		09:00 - 11:00	0	0	1	1	17%	0.33		
		11:00 - 13:00	0	0	0	0	0%	0.00		
		13:00 - 15:00	0	1	0	1	17%	0.33		
		15:00 - 18:00	0	1	1	2	33%	0.67		
		18:00 - 24:00	0	0	0	0	0%	0.00		
	Direction	NB→EB	0	1	0	1	17%	0.33		
		EB→SB	0	0	0	0	0%	0.00		
		WB→NB	0	2	0	2	33%	0.67		
		SB→WB	1	0	2	3	50%	1.00		
		Unknown	0	0	0	0	0%	0.00		

			NUMBER OF CRASHES YEAR 2006	2007	2008	3 YEAR TOTAL CRASHES	% of Total	MEAN Accidents per Year	Possible Cause(s)	Counter-measure(s)
Sideswipe (Overtake)	Total Sideswipe Crashes		11	13	14	38	100%	12.67	(8)	4
	Lighting Conditions	Day Light	10	12	11	33	87%	11.00	(19)	19
		Dawn	0	0	0	0	0%	0.00	(20)	21
		Dark	1	1	3	5	13%	1.67	(21)	
	Hours of Day	00:00 - 06:00	0	0	1	1	3%	0.33		
		06:00 - 09:00	2	1	3	6	16%	2.00		
		09:00 - 11:00	2	2	2	6	16%	2.00		
		11:00 - 13:00	1	1	1	3	8%	1.00		
		13:00 - 15:00	4	0	1	5	13%	1.67		
		15:00 - 18:00	1	4	4	9	24%	3.00		
		18:00 - 24:00	1	5	2	8	21%	2.67		
	Direction	North	4	2	1	7	18%	2.33		
		South	1	4	4	9	24%	3.00		
		East	3	4	8	15	39%	5.00		
		West	3	3	1	7	18%	2.33		
		Unknown	0	0	0	0	0%	0.00		

3.14.3. Traffic Operation Conditions and Analysis

In order to identify the traffic operation characteristics and safety relevant conflicts, field observations at NW 87 Avenue and NW 25 Street were performed on a typical weekday on October 28, 2010. A summary of the traffic data is presented in *Figure 55*, and the field review is presented in *Figure 56*.

This intersection has double left-turn bays for eastbound/westbound approaches, and these two approaches, plus the northbound approach have exclusive right-turn lanes. The signal operation is split phases protected/permissive for left-turn lanes except for eastbound and westbound double left-turns which are protected only.

This intersection handles a large number of heavy vehicles and trucks. Long queues were observed for northbound left-turn with vehicles spilling back and blocking the through lane.

The southbound right-turning vehicles suffer an inadequate turning radius due to the presence of the canal.

Additionally, considerable weaving was observed in the eastbound approach due to the alignment of the through and left turn lanes.

3.14.4. Recommendations

Based on the safety analysis, field observations and traffic operations for the intersection of NW 87 Avenue and NW 25 Street, the following is recommended:

- Lengthen the northbound left-turn lane to approximately 450 ft.
- Retiming/optimizing of the existing signal while maintaining cycle length for both the AM and PM peak hours.
- Improving the eastbound approach lane alignment at the start of the taper.
- Modifying the southbound right-turn radius to better accommodate heavy vehicles.
- Installing lane use signs (R3-8) for all approaches.
- Replacing the damaged pedestrian push buttons.
- Resurfacing the intersection.
- Refurbishing of pavement markings using thermoplastic painting.

A conceptual vision of the proposed roadway improvements is exhibited in *Figure 57*.

24-hr Approach Counts

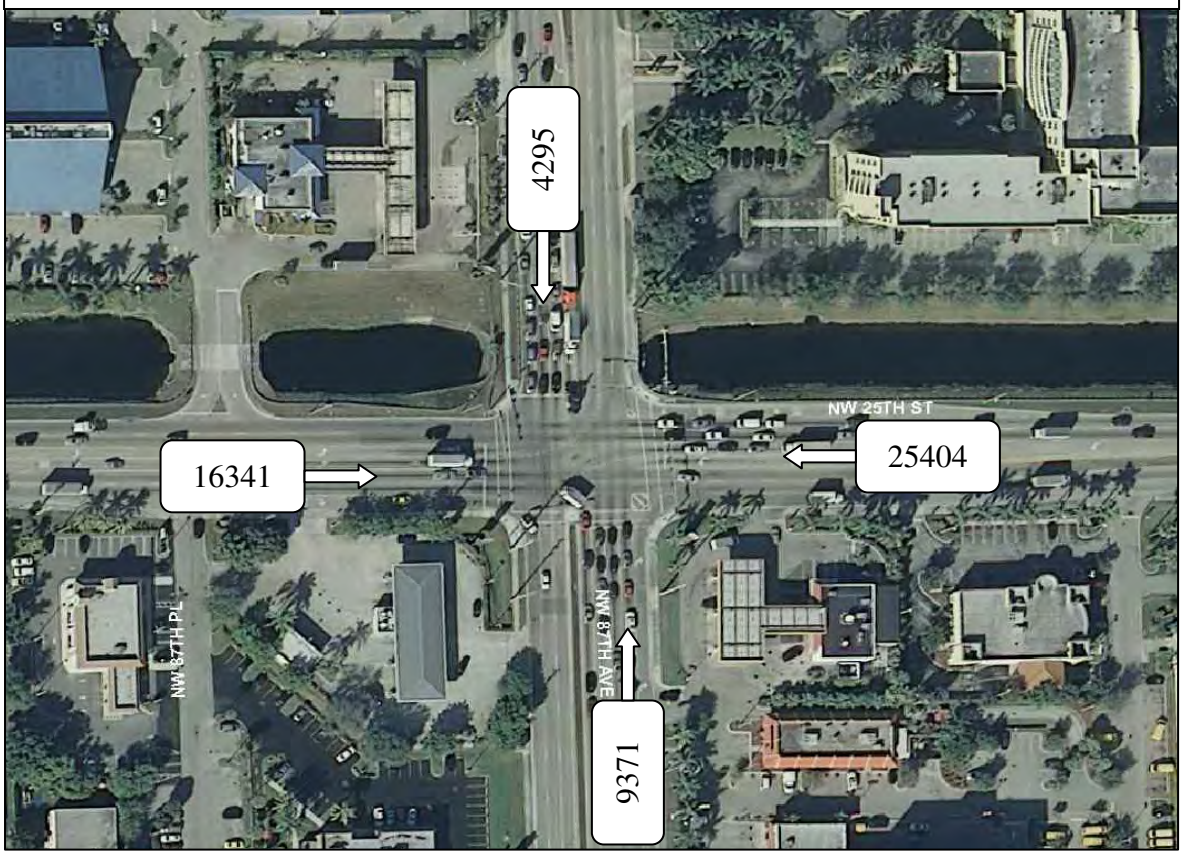

Turning Movement Counts (TMC)

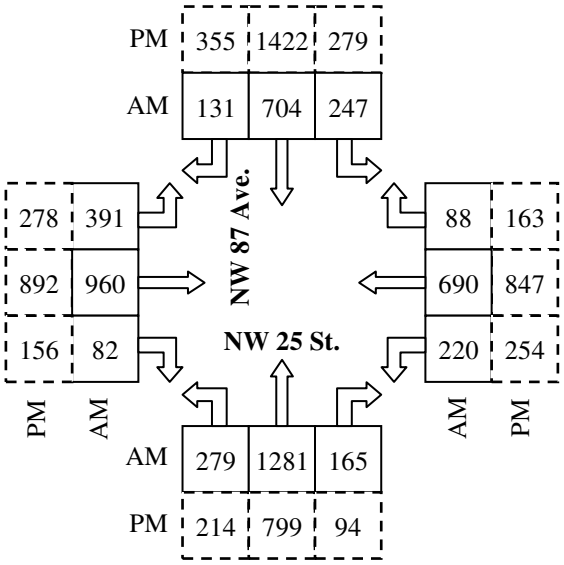

Figure 55: Traffic Data – *NW 87 Avenue and NW 25 Street*

Northbound approach: Inadequate storage length to handle the heavy left-turn vehicles.

Southbound approach: Inadequate right-turn radius to handle heavy vehicles.

Eastbound approach: Large number of heavy vehicles.

Damaged pedestrian features needs to be replaced.

Faded pavement markings.

Deteriorated pavement conditions.

Figure 56: Field Review – *NW 87 Avenue and NW 25 Street*

Figure 57: Conceptual Plan – *NW 87 Avenue and NW 25 Street*

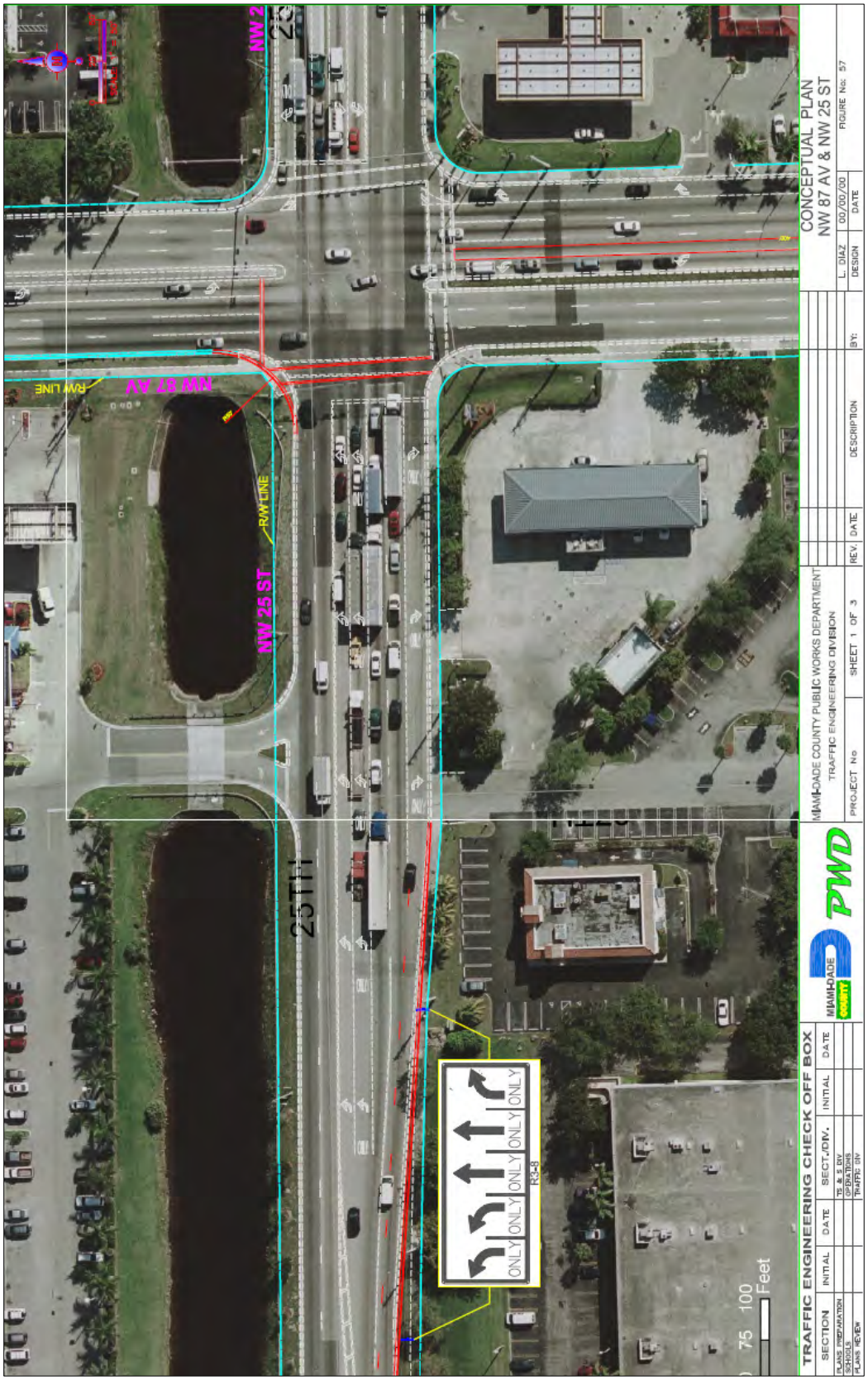

3.15. SW 117 Avenue and SW 120 Street

3.15.1. Site Description

This intersection is a signalized four legged intersection located in the unincorporated area of southwest Miami Dade County. SW 117 Avenue is a four lane urban arterial divided by a raised median that runs north-south, and SW 120 Street is a four lane major collector divided by a raised median that runs east-west.

3.15.2. Safety Conditions and Analysis

The intersection of SW 117 Avenue and SW 120 Street is ranked number 15 in our high crash locations list. A review of the hard copy police reports for the years 2006 through 2008 was performed. During the three-year analysis period, 102 relevant crashes occurred at the intersection. The analysis indicated that the average number of crashes per year is 34. The crash summaries, crash statistics and collision diagrams for the intersection are documented in *Appendix A*.

Based on the analysis of crash records for this intersection, the predominant types of crashes are shown in *Figure 58.*

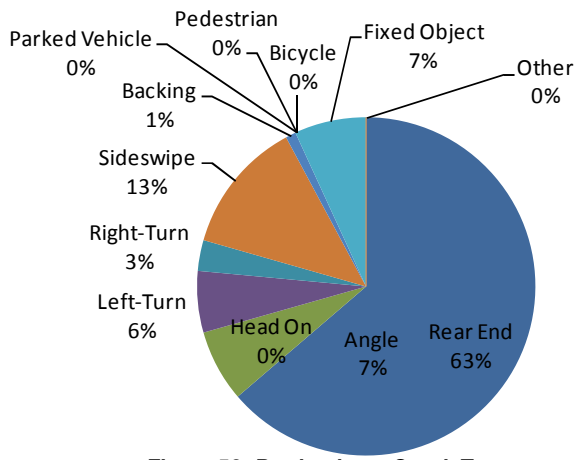

Figure 58: Predominant Crash Types SW 117 AVE & SW 120 ST

Calculated intersection mean crash per year were compared to the average Miami-Dade Crash Rate for County corridors to assess the safety conditions at the study intersection in relation to other roadways with similar traffic and geometric characteristics. This study is based on the 2007 FDOT's "Expected Value Analysis." *Table 34* illustrates the expected accident volume analysis of this intersection as well as the safety ratios and the confidence levels during the analysis period.

Based on a regression growth of 2% from the 2006 entering volume, the calculated safety ratios for the years 2006, 2007, and 2008 were 2.741, 1.893, and 2.697, respectively. The safety ratio for the three years averaged 2.444. Also, results of confidence level indicated that this intersection has been a high crash location during the three years with a confidence level higher than 99.95%.

From this analysis, it was determined that rear end, angle, left-turn, right-turn, sideswipe, backing and fixed object collisions presented abnormal crash patterns that exceed the threshold limits for the 95th percentile and 90th percentile confidence level. Those results indicate that these types of collisions were abnormally high during the period of 2006 through 2008. A detailed review of the abnormal crashes as well as probable countermeasures is presented in *Table 35*.

Table 34 – Crash Analysis – SW 117 Avenue and SW 120 Street

SW 117 Avenue & SW 120 Street

(4 Lane x 4 Lane, Signalized, With Turn Lanes, T Intersection -Table 27) - URBAN Spot

	TYPE OF CRASH	NUMBER OF CRASHES YEAR 2006	2007	2008	3 YEAR TOTAL CRASHE	% of Total	MEAN Accidents per Year	EXPECTED ANNUAL CRASH VALUE MEAN	90th Percentile	95th Percentile	ABNORMALLY HIGH CRASHES Mean	90th Percentil	95th Percentil
COLLISION TYPE	Rear End	27	17	21	65	32%	21.67	0.45	1.78	2.04	X	X	X
	Head On	0	0	0	0	0%	0.00	0.09	0.45	0.51			
	Angle	1	1	5	7	3%	2.33	0.58	1.88	2.13	X	X	X
	Left Turn	2	2	2	6	3%	2.00	0.18	0.56	0.63	X	X	X
	Right Turn	0	2	1	3	1%	1.00	0.18	0.75	0.86	X	X	X
	Sideswipe	5	4	4	13	4%	4.33	0.18	0.69	0.79	X	X	X
	Backed Into	0	0	1	1	0%	0.33	0.03	0.19	0.23	X	X	X
	Coll. w/ Parked Car	0	0	0	0	0%	0.00	0.03	0.19	0.23			
	Coll. w/ Pedestrian	0	0	0	0	0%	0.00	0.09	0.34	0.39			
	Coll. w/ Bicycle	0	0	0	0	0%	0.00	0.00	0.00	0.00			
	Fixed Object	3	1	3	7	2%	2.33	0.00	0.00	0.00	X	X	X
	Ran Off Road	0	0	0	0	0%	0.00	0.00	0.00	0.00			
	Overtuned	0	0	0	0	0%	0.00	0.00	0.00	0.00			
	Other	0	0	0	0	0%	0.00	1.03	3.78	4.30			
	Total Crashes	38	27	37	102	23%	34.00	3.09	9.10	10.25	X	X	X
SEVERITY	PDO crashes	36	27	36	99	97%	33.00	1.67	5.72	6.49	X	X	X
	Fatal crashes	0	0	0	0	0%	0.00	0.39	1.90	2.19			
	Injury crashes	2	0	1	3	3%	1.00	1.73	5.11	5.75			
LIGHT CONDITIONS	Day Light	33	18	28	79	77%	26.33	1.79	6.11	6.94	X	X	X
	Dusk	0	1	2	3	3%	1.00	0.15	0.60	0.69	X	X	X
	Dawn	0	0	0	0	0%	0.00	0.12	0.63	0.72			
	Dark	5	8	7	20	20%	6.67	0.51	1.54	1.73	X	X	X
	Unknown	0	0	0	0	0%	0.00	0.18	0.75	0.86			
SURFACE CONDITIONS	Dry	35	22	31	88	86%	29.33	2.33	7.67	8.69	X	X	X
	Wet	3	5	6	14	14%	4.67	0.33	1.03	1.16	X	X	X
	Others	0	0	0	0	0%	0.00	0.18	0.63	0.72			
MONTH OF A YEAR	January	6	4	4	14	14%	4.67	0.15	0.53	0.60	X	X	X
	February	4	2	1	7	7%	2.33	0.06	0.28	0.32	X	X	X
	March	2	1	3	6	6%	2.00	0.24	0.94	1.07	X	X	X
	April	1	1	4	6	6%	2.00	0.42	1.44	1.63	X	X	X
	May	2	1	6	9	9%	3.00	0.30	0.97	1.10	X	X	X
	June	5	5	3	13	13%	4.33	0.33	1.07	1.21	X	X	X
	July	4	1	2	7	7%	2.33	0.30	0.97	1.10	X	X	X
	August	3	3	3	9	9%	3.00	0.45	1.47	1.67	X	X	X
	September	2	1	3	6	6%	2.00	0.15	0.53	0.60	X	X	X
	October	2	1	4	7	7%	2.33	0.42	1.28	1.44	X	X	X
	November	5	4	2	11	11%	3.67	0.30	1.05	1.20	X	X	X
	December	2	3	2	7	7%	2.33	0.15	0.60	0.69	X	X	X
DAY OF THE WEEK	Sunday	5	4	1	10	10%	3.33	0.58	1.67	1.88	X	X	X
	Monday	4	0	4	8	8%	2.67	0.42	1.38	1.56	X	X	X
	Tuesday	4	5	6	15	15%	5.00	0.30	0.88	0.99	X	X	X
	Wednesday	8	6	10	24	24%	8.00	0.27	0.81	0.91	X	X	X
	Thursday	4	5	9	18	18%	6.00	0.36	1.36	1.55	X	X	X
	Friday	9	1	3	13	13%	4.33	0.79	2.91	3.32	X	X	X
	Saturday	4	6	4	14	14%	4.67	0.39	1.16	1.31	X	X	X
HOUR OF THE DAY	00:00-06:00	2	1	0	3	3%	1.00	0.36	1.29	1.47	X		
	06:00-09:00	9	6	4	19	19%	6.33	0.15	0.66	0.76	X	X	X
	09:00-11:00	7	2	2	11	11%	3.67	0.18	0.69	0.79	X	X	X
	11:00-13:00	5	3	5	13	13%	4.33	0.39	1.43	1.63	X	X	X
	13:00-15:00	5	3	5	13	13%	4.33	0.48	1.74	1.98	X	X	X
	15:00-18:00	4	3	10	17	17%	5.67	0.70	2.59	2.95	X	X	X
	18:00-24:00	6	9	11	26	25%	8.67	0.39	1.43	1.63	X	X	X

	YEAR 1	2	3	3-Year Average
Average Daily Traffic ADT *(Vehicles per Day)*	59,557	59,556	60,771	59,961
Florida Average Crash rate *(Crashes per Million Entering Vehicles)*	0.257	0.268	0.248	0.258
Traffic Base	21.738	21.738	22.181	21.886
Actual Crash Rate *(Crashes per Million Entering Vehicles)*	1.748	1.242	1.668	1.553
Critical Crash Rate *(Crashes per Million Entering Vehicles)*	0.638	0.656	0.618	0.637
Safety Ratio	**2.741**	**1.893**	**2.697**	**2.444**
High Crash Location??	***YES***	***YES***	***YES***	***YES***

$$Actual\ \ Crash\ \ Rate = \frac{A \times 1{,}000{,}000}{V}$$

Where:
A = Total number of crashes or number of crashes by type occurring in a 1 year period.
V = Average Annual Daily Traffic X 365

$$CriticalCrashRate = AVR + \frac{0.5}{TB} + TF\sqrt{\frac{AVR}{TB}}$$

$$Traffic\ Base = \frac{Years \times ADT \times 365}{1{,}000{,}000}$$

$$Safety\ \ Ratio = \frac{Actual\ \ Crash\ \ Rate}{Critical\ \ Crash\ \ Rate}$$

Where:
AVR = Average Statewide Crash Rate for a particular type of intersection or roadway segment.
TB = Traffic Base
TF = Test Factor (z-value)
= *1.96 (assume 95% Confidence Level for RURAL areas)*
= *3.29 (assume 99.95% Confidence Level for URBAN areas)*

Confidence Level (%)	Constant Z
68.30	1.00
86.60	1.50
90.00	1.64
95.00	1.96
95.50	2.00
98.80	2.50
99.00	2.58
99.70	3.00
99.95	3.29

Table 35 – Abnormal Crash Details & Countermeasures SW 117 Avenue and SW 120 Street

SW 117 Avenue & SW 120 Street

(4 Lane x 4 Lane, Signalized, With Turn Lanes, T Intersection -Table 27) - URBAN Spot

			NUMBER OF CRASHES YEAR 2006	2007	2008	3 YEAR TOTAL CRASHE	% of Total	MEAN Accidents per Year	Possible Cause(s)	Counter-measure(s)
Rear End	Total Rear End Crashes		27	17	21	65	100%	21.67	(1)	4
	Lighting Conditions	Day Light	26	10	18	54	83%	18.00	(2)	5
		Dawn	0	1	1	2	3%	0.67	(4)	6
		Dark	1	6	2	9	14%	3.00	(8)	
	Hours of Day	00:00 - 06:00	1	1	0	2	3%	0.67		
		06:00 - 09:00	8	4	3	15	23%	5.00		
		09:00 - 11:00	4	1	2	7	11%	2.33		
		11:00 - 13:00	5	2	3	10	15%	3.33		
		13:00 - 15:00	3	2	4	9	14%	3.00		
		15:00 - 18:00	2	2	5	9	14%	3.00		
		18:00 - 24:00	4	5	4	13	20%	4.33		
	Direction	North	6	2	0	8	12%	2.67		
		South	4	2	5	11	17%	3.67		
		East	16	13	16	45	69%	15.00		
		West	1	0	0	1	2%	0.33		
		Unknown	0	0	0	0	0%	0.00		

			NUMBER OF CRASHES YEAR 2006	2007	2008	3 YEAR TOTAL CRASHE	% of Total	MEAN Accidents per Year	Possible Cause(s)	Counter-measure(s)
Angle	Total Angle Crashes		1	1	5	7	100%	2.33	(4)	6
	Lighting Conditions	Day Light	1	1	5	7	100%	2.33	(12)	
		Dawn	0	0	0	0	0%	0.00		
		Dark	0	0	0	0	0%	0.00		
	Hours of Day	00:00 - 06:00	0	0	0	0	0%	0.00		
		06:00 - 09:00	1	1	0	2	29%	0.67		
		09:00 - 11:00	0	0	1	1	14%	0.33		
		11:00 - 13:00	0	0	0	0	0%	0.00		
		13:00 - 15:00	0	0	1	1	14%	0.33		
		15:00 - 18:00	0	0	1	1	14%	0.33		
		18:00 - 24:00	0	0	2	2	29%	0.67		
	Direction	NB + EB	1	1	2	4	57%	1.33		
		NB + WB	0	0	0	0	0%	0.00		
		SB + EB	0	0	3	3	43%	1.00		
		SB + WB	0	0	0	0	0%	0.00		
		Unknown	0	0	0	0	0%	0.00		

			NUMBER OF CRASHES YEAR 2006	2007	2008	3 YEAR TOTAL CRASHE	% of Total	MEAN Accidents per Year	Possible Cause(s)	Counter-measure(s)
Left Turn	Total Left Turn Crashes		2	2	2	6	100%	2.00	(4)	6
	Lighting Conditions	Day Light	1	2	0	3	50%	1.00	(13)	13
		Dawn	0	0	0	0	0%	0.00		
		Dark	1	0	2	3	50%	1.00		
	Hours of Day	00:00 - 06:00	0	0	0	0	0%	0.00		
		06:00 - 09:00	0	0	0	0	0%	0.00		
		09:00 - 11:00	1	0	0	1	17%	0.33		
		11:00 - 13:00	0	1	1	2	33%	0.67		
		13:00 - 15:00	0	0	0	0	0%	0.00		
		15:00 - 18:00	0	1	0	1	17%	0.33		
		18:00 - 24:00	1	0	1	2	33%	0.67		
	Direction	NB → WB	2	2	2	6	100%	2.00		
		WB → SB	0	0	0	0	0%	0.00		
		SB → EB	0	0	0	0	0%	0.00		
		EB → NB	0	0	0	0	0%	0.00		
		Unknown	0	0	0	0	0%	0.00		

			NUMBER OF CRASHES YEAR 2006	2007	2008	3 YEAR TOTAL CRASHE	% of Total	MEAN Accidents per Year	Possible Cause(s)	Counter-measure(s)
Sideswipe (Overtake)	Total Sideswipe Crashes		5	4	4	13	100%	4.33	(8)	19
	Lighting Conditions	Day Light	5	4	3	12	92%	4.00	(18)	21
		Dawn	0	0	1	1	8%	0.33	(19)	22
		Dark	0	0	0	0	0%	0.00	(20)	
	Hours of Day	00:00 - 06:00	0	0	0	0	0%	0.00	(21)	
		06:00 - 09:00	0	2	0	2	15%	0.67		
		09:00 - 11:00	2	0	0	2	15%	0.67		
		11:00 - 13:00	0	1	0	1	8%	0.33		
		13:00 - 15:00	1	0	0	1	8%	0.33		
		15:00 - 18:00	2	0	2	4	31%	1.33		
		18:00 - 24:00	0	1	2	3	23%	1.00		
	Direction	North	3	2	1	6	46%	2.00		
		South	1	1	2	4	31%	1.33		
		East	1	1	1	3	23%	1.00		
		West	0	0	0	0	0%	0.00		
		Unknown	0	0	0	0	0%	0.00		

			NUMBER OF CRASHES YEAR 2006	2007	2008	3 YEAR TOTAL CRASHE	% of Total	MEAN Accidents per Year	Possible Cause(s)	Counter-measure(s)
Right Turn	Total Right Turn Crashes		0	2	1	3	100%	1.00	(1)	13
	Lighting Conditions	Day Light	0	1	1	2	67%	0.67	(9)	21
		Dawn	0	0	0	0	0%	0.00		
		Dark	0	1	0	1	33%	0.33		
	Hours of Day	00:00 - 06:00	0	0	0	0	0%	0.00		
		06:00 - 09:00	0	0	0	0	0%	0.00		
		09:00 - 11:00	0	0	0	0	0%	0.00		
		11:00 - 13:00	0	1	0	1	33%	0.33		
		13:00 - 15:00	0	0	0	0	0%	0.00		
		15:00 - 18:00	0	0	1	1	33%	0.33		
		18:00 - 24:00	0	1	0	1	33%	0.33		
	Direction	NB→EB	0	0	0	0	0%	0.00		
		EB→SB	0	2	0	2	67%	0.67		
		WB→NB	0	0	0	0	0%	0.00		
		SB→WB	0	0	1	1	33%	0.33		
		Unknown	0	0	0	0	0%	0.00		

			NUMBER OF CRASHES YEAR 2006	2007	2008	3 YEAR TOTAL CRASHE	% of Total	MEAN Accidents per Year	Possible Cause(s)	Counter-measure(s)
Fixed Object	Total Fixed Object Crashes		3	1	3	7	100%	2.33	(2)	5
	Lighting Conditions	Day Light	1	0	2	3	43%	1.00	(17)	20
		Dawn	0	0	0	0	0%	0.00	(25)	28
		Dark	2	1	1	4	57%	1.33		
	Hours of Day	00:00 - 06:00	1	1	0	2	29%	0.67		
		06:00 - 09:00	0	0	1	1	14%	0.33		
		09:00 - 11:00	0	0	0	0	0%	0.00		
		11:00 - 13:00	0	0	0	0	0%	0.00		
		13:00 - 15:00	1	0	0	1	14%	0.33		
		15:00 - 18:00	0	0	1	1	14%	0.33		
		18:00 - 24:00	1	0	1	2	29%	0.67		
	Direction	North	1	0	2	3	43%	1.00		
		South	0	0	0	0	0%	0.00		
		East	1	1	1	3	43%	1.00		
		West	1	0	0	1	14%	0.33		
		Unknown	0	0	0	0	0%	0.00		

3.15.3. Traffic Operation Conditions and Analysis

In order to identify the traffic operation characteristics and safety relevant conflicts, field observations at SW 117 Avenue and SW 120 Street were performed on a typical weekday on November 17, 2010. A summary of the traffic data is presented in *Figure 59*, and the field review is presented in *Figure 60*.

This T-intersection has double left-turn lanes for northbound and eastbound approaches, and the southbound and eastbound approaches have exclusive right-turn lanes. The signal operation is protected for northbound left-turn traffic.

Heavy traffic and long queues were observed for eastbound approach and northbound left-turn traffic. Also, vehicles were observed changing lanes and weaving at these approaches.

Red light running was observed at the intersection, especially northbound left-turns.

Speeding was observed for northbound and southbound approaches. Additionally, southbound right-turn vehicles were observed taking the curve at a high rate of speed.

Further, it was observed that the eastbound right-turn traffic conflict with the southbound through traffic and a better channelization needs to be implemented.

3.15.4. Recommendations

Based on the safety analysis, field observations and traffic operations for the intersection of SW 117 Avenue and SW 120 Street, the following is recommended:

- Lengthen the eastbound left-turn lanes to approximately 600 ft. each.
- Retiming/optimizing of the existing signal while maintaining cycle length for both the AM and PM peak hours.
- Installing lane use signs (R3-8) for all approaches.
- Modifying the channelization of the eastbound right-turns.
- Provide/repair the pedestrian features including ADA approved pedestrian ramps.
- Resurfacing the intersection.
- Refurbishing of pavement markings using thermoplastic painting.

A conceptual vision of the proposed roadway improvements is exhibited in *Figure 61*.

24-hr Approach Counts

Turning Movement Counts (TMC)

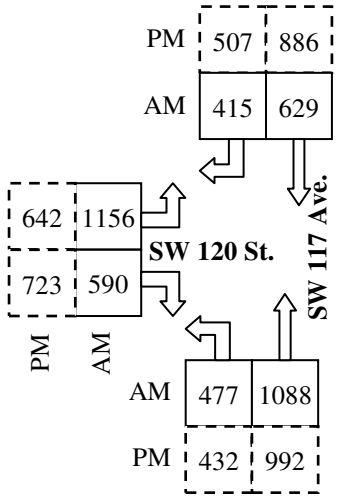

Figure 59: Traffic Data – *SW 117 Avenue and SW 120 Street*

Northbound approach: Large number of left-turn vehicles.

Eastbound approach: Large number of left-turn vehicles.

East leg: heavy traffic at both directions.

Eastbound right-turns: Inadequate channelization and tire marks.

North leg: substandard pedestrian ramps and damaged signal post.

Faded pavement markings and deteriorated pavement conditions.

Figure 60: Field Review – *SW 117 Avenue and SW 120 Street*

Figure 61: Conceptual Plan – *SW 117 Avenue and SW 120 Street*

3.16. SW 137 Avenue and SW 136 Street

3.16.1. Site Description

This intersection is a signalized four legged intersection located in the unincorporated area of southwest Miami Dade County. SW 137 Avenue is a six lane urban arterial divided by a raised median that runs north-south, and SW 136 Street is a four lane major collector divided by a raised median that runs east-west.

3.16.2. Safety Conditions and Analysis

The intersection of SW 137 Avenue and SW 136 Street is ranked number 16 in our high crash locations list. A review of the hard copy police reports for the years 2006 through 2008 was performed. During the three-year analysis period, 114 relevant crashes occurred at the intersection. The analysis indicated that the average number of crashes per year is 38. The crash summaries, crash statistics and collision diagrams for the intersection are documented in *Appendix A*.

Based on the analysis of crash records for this intersection, the predominant types of crashes are shown in *Figure 62*.

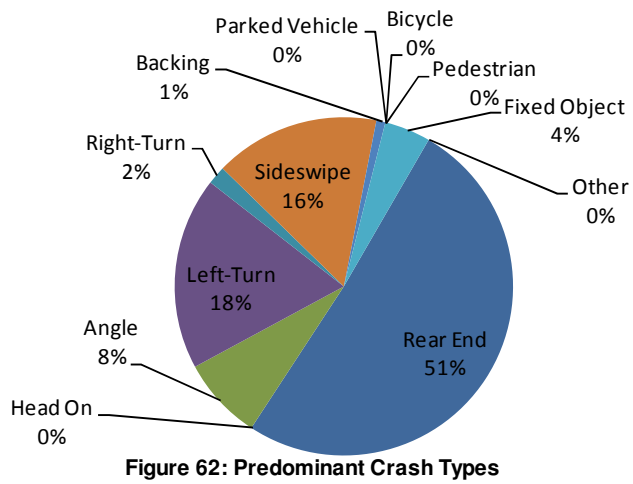

Figure 62: Predominant Crash Types SW 137 AVE & SW 136 ST

Calculated intersection mean crash per year were compared to the average Miami-Dade Crash Rate for County corridors to assess the safety conditions at the study intersection in relation to other roadways with similar traffic and geometric characteristics. This study is based on the 2007 FDOT's "Expected Value Analysis." *Table 36* illustrates the expected accident volume analysis of this intersection as well as the safety ratios and the confidence levels during the analysis period.

Based on a regression growth of 2% from the 2006 entering volume, the calculated safety ratios for the years 2006, 2007, and 2008 were 1.353, 1.648, and 1.795, respectively. The safety ratio for the three years averaged 1.599. Also, results of confidence level indicated that this intersection has been a high crash location during the three years with a confidence level higher than 99.95%.

From this analysis, it was determined that rear end, left-turn and sideswipe collisions presented abnormal crash patterns that exceed the threshold limits for the 95th percentile and 90th percentile confidence level. Those results indicate that these types of collisions were abnormally high during the period of 2006 through 2008. A detailed review of the abnormal crashes as well as probable countermeasures is presented in *Table 37*.

Table 36 – Crash Analysis – SW 137 Avenue and SW 136 Street

SW 137 Avenue & SW 136 Street

(6 Lane x 4 Lane, Signalized, With Turn Lanes, 4 Leg Intersection -Table 35) - URBAN Spot

	TYPE OF CRASH	NUMBER OF CRASHES YEAR 2006	2007	2008	3 YEAR TOTAL CRASHE	% of Total	MEAN Accidents per Year	EXPECTED ANNUAL CRASH VALUE MEAN	90th Percentile	95th Percentile	ABNORMALLY HIGH CRASHES Mean	90th Percentil	95th Percentil
COLLISION TYPE	Rear End	18	20	20	58	25%	19.33	8.68	17.26	18.90	X	X	X
	Head On	0	0	0	0	0%	0.00	0.60	1.64	1.84			
	Angle	2	1	6	9	3%	3.00	5.40	9.19	9.92			
	Left Turn	6	7	8	21	8%	7.00	3.00	6.13	6.73	X	X	X
	Right Turn	2	0	0	2	1%	0.67	0.46	1.36	1.53	X		
	Sideswipe	2	8	8	18	5%	6.00	2.58	4.92	5.37	X	X	X
	Backed Into	1	0	0	1	0%	0.33	0.28	0.84	0.94	X		
	Coll. w/ Parked Car	0	0	0	0	0%	0.00	0.12	0.57	0.65			
	Coll. w/ Pedestrian	0	0	0	0	0%	0.00	0.74	1.80	2.00			
	Coll. w/ Bicycle	0	0	0	0	0%	0.00	0.14	0.49	0.55			
	Fixed Object	1	3	1	5	1%	1.67	0.79	2.01	2.24	X		
	Ran Off Road	0	0	0	0	0%	0.00	0.01	0.11	0.13			
	Overtuned	0	0	0	0	0%	0.00	0.04	0.28	0.33			
	Other	0	0	0	0	0%	0.00	8.67	21.05	23.42			
	Total Crashes	32	39	43	114	24%	38.00	31.51	54.94	59.43	X		
SEVERITY	PDO crashes	30	38	41	109	96%	36.33	19.21	36.95	40.35	X		
	Fatal crashes	0	0	0	0	0%	0.00	0.16	0.56	0.63			
	Injury crashes	2	1	2	5	4%	1.67	20.77	38.34	41.71			
LIGHT CONDITIONS	Day Light	26	33	31	90	79%	30.00	19.89	35.12	38.03	X		
	Dusk	1	0	0	1	1%	0.33	0.61	1.43	1.58			
	Dawn	0	0	3	3	3%	1.00	0.38	1.03	1.16	X		
	Dark	5	6	9	20	18%	6.67	10.22	18.94	20.61			
	Unknown	0	0	0	0	0%	0.00	0.41	1.15	1.30			
SURFACE CONDITIONS	Dry	26	35	41	102	89%	34.00	26.41	45.71	49.41	X		
	Wet	2	4	2	8	7%	2.67	4.41	8.78	9.62			
	Others	4	0	0	4	4%	1.33	0.69	1.88	2.11	X		
MONTH OF A YEAR	January	3	3	4	10	9%	3.33	2.57	5.04	5.52	X		
	February	2	6	6	14	12%	4.67	2.37	4.59	5.02	X	X	
	March	0	1	1	2	2%	0.67	3.09	5.92	6.46			
	April	3	5	4	12	11%	4.00	2.57	5.30	5.82	X		
	May	4	2	5	11	10%	3.67	2.51.	4.81	5.25			
	June	2	4	7	13	11%	4.33	2.81	5.74	6.30	X		
	July	2	2	2	6	5%	2.00	2.60	4.96	5.42			
	August	3	4	5	12	11%	4.00	3.00	5.66	6.17	X		
	September	3	3	0	6	5%	2.00	2.48	4.92	5.39			
	October	5	4	3	12	11%	4.00	2.89	5.40	5.88	X		
	November	5	3	3	11	10%	3.67	2.41	4.85	5.32	X		
	December	0	2	3	5	4%	1.67	2.22	4.55	5.00			
DAY OF THE WEEK	Sunday	1	1	5	7	6%	2.33	4.00	6.58	7.08			
	Monday	1	6	6	13	11%	4.33	4.62	9.23	10.11			
	Tuesday	6	8	5	19	17%	6.33	4.46	7.81	8.46	X		
	Wednesday	10	5	5	20	18%	6.67	4.56	8.62	9.40	X		
	Thursday	6	6	7	19	17%	6.33	5.04	9.04	9.80	X		
	Friday	7	7	9	23	20%	7.67	4.86	9.39	10.26	X		
	Saturday	1	6	6	13	11%	4.33	3.98	8.10	8.89	X		
HOUR OF THE DAY	00:00-06:00	0	1	1	2	2%	0.67	3.79	8.65	9.58			
	06:00-09:00	4	6	5	15	13%	5.00	3.44	6.94	7.61	X		
	09:00-11:00	5	5	3	13	11%	4.33	2.58	5.30	5.82	X		
	11:00-13:00	6	7	8	21	18%	7.00	3.12	5.78	6.29	X	X	X
	13:00-15:00	5	4	8	17	15%	5.67	3.57	6.32	6.85	X		
	15:00-18:00	6	8	7	21	18%	7.00	6.38	11.52	12.50	X		
	18:00-24:00	6	8	11	25	22%	8.33	8.60	15.51	16.83			

	YEAR 1	2	3	3-Year Average
Average Daily Traffic ADT *(Vehicles per Day)*	55,981	57,123	58,289	57,131
Florida Average Crash rate *(Crashes per Million Entering Vehicles)*	0.579	0.568	0.566	0.571
Traffic Base	20.433	20.850	21.275	20.853
Actual Crash Rate *(Crashes per Million Entering Vehicles)*	1.566	1.871	2.021	1.819
Critical Crash Rate *(Crashes per Million Entering Vehicles)*	1.157	1.135	1.126	1.139
Safety Ratio	**1.353**	**1.648**	**1.795**	**1.599**
High Crash Location??	***YES***	***YES***	***YES***	***YES***

$$Actual\ \ Crash\ \ Rate = \frac{A \times 1{,}000{,}000}{V}$$

Where:
A = Total number of crashes or number of crashes by type occurring in a 1 year period.
V = Average Annual Daily Traffic X 365

$$CriticalCrashRate = AVR + \frac{0.5}{TB} + TF\sqrt{\frac{AVR}{TB}}$$

Where:
AVR = Average Statewide Crash Rate for a particular type of intersection or roadway segment.
TB = Traffic Base
TF = Test Factor (z-value)
= *1.96 (assume 95% Confidence Level for RURAL areas)*
= *3.29 (assume 99.95% Confidence Level for URBAN areas)*

$$Traffic\ Base = \frac{Years \times ADT \times 365}{1{,}000{,}000}$$

$$Safety\ \ Ratio = \frac{Actual\ \ Crash\ \ Rate}{Critical\ \ Crash\ \ Rate}$$

Confidence Level (%)	Constant Z
68.30	1.00
86.60	1.50
90.00	1.64
95.00	1.96
95.50	2.00
98.80	2.50
99.00	2.58
99.70	3.00
99.95	3.29

Table 37 – Abnormal Crash Details & Countermeasures SW 137 Avenue and SW 136 Street

SW 137 Avenue & SW 136 Street

(6 Lane x 4 Lane, Signalized, With Turn Lanes, 4 Leg Intersection -Table 35) - URBAN Spot

			NUMBER OF CRASHES YEAR 2006	2007	2008	3 YEAR TOTAL CRASHE	% of Total	MEAN Accidents per Year	Possible Cause(s)	Counter-measure(s)
Rear End	Total Rear End Crashes		**18**	**20**	**20**	**58**	**100%**	**19.33**	(1)	2
	Lighting Conditions	Day Light	16	16	15	47	81%	15.67	(2)	5
		Dawn	0	0	2	2	3%	0.67	(4)	6
		Dark	2	4	3	9	16%	3.00	(8)	
	Hours of Day	00:00 - 06:00	0	0	0	0	0%	0.00		
		06:00 - 09:00	1	6	1	8	14%	2.67		
		09:00 - 11:00	4	0	2	6	10%	2.00		
		11:00 - 13:00	3	2	4	9	16%	3.00		
		13:00 - 15:00	3	3	6	12	21%	4.00		
		15:00 - 18:00	4	5	3	12	21%	4.00		
		18:00 - 24:00	3	4	4	11	19%	3.67		
	Direction	North	9	6	5	20	34%	6.67		
		South	5	8	8	21	36%	7.00		
		East	3	3	3	9	16%	3.00		
		West	1	3	4	8	14%	2.67		
		Unknown	0	0	0	0	0%	0.00		

			NUMBER OF CRASHES YEAR 2006	2007	2008	3 YEAR TOTAL CRASHE	% of Total	MEAN Accidents per Year	Possible Cause(s)	Counter-measure(s)
Left Turn	Total Left turn Crashes		**6**	**7**	**8**	**21**	**100%**	**7.00**	(4)	6
	Lighting Conditions	Day Light	4	7	5	16	76%	5.33	(9)	13
		Dawn	0	0	2	2	10%	0.67	(13)	
		Dark	2	0	1	3	14%	1.00		
	Hours of Day	00:00 - 06:00	0	0	0	0	0%	0.00		
		06:00 - 09:00	1	0	2	3	14%	1.00		
		09:00 - 11:00	0	3	1	4	19%	1.33		
		11:00 - 13:00	1	3	0	4	19%	1.33		
		13:00 - 15:00	2	0	0	2	10%	0.67		
		15:00 - 18:00	0	1	1	2	10%	0.67		
		18:00 - 24:00	2	0	4	6	29%	2.00		
	Direction	NB → WB	3	0	5	8	38%	2.67		
		WB → SB	0	0	0	0	0%	0.00		
		SB → EB	3	5	2	10	48%	3.33		
		EB → NB	0	2	1	3	14%	1.00		
		Unknown	0	0	0	0	0%	0.00		

			NUMBER OF CRASHES YEAR 2006	2007	2008	3 YEAR TOTAL CRASHE	% of Total	MEAN Accidents per Year	Possible Cause(s)	Counter-measure(s)
Sideswipe (Overtake)	Total Sideswipe Crashes		**2**	**8**	**8**	**18**	**100%**	**6.00**	(8)	19
	Lighting Conditions	Day Light	2	7	5	14	78%	4.67	(18)	21
		Dawn	0	0	0	0	0%	0.00	(19)	22
		Dark	0	1	3	4	22%	1.33	(21)	
	Hours of Day	00:00 - 06:00	0	0	1	1	6%	0.33		
		06:00 - 09:00	1	0	0	1	6%	0.33		
		09:00 - 11:00	0	1	1	2	11%	0.67		
		11:00 - 13:00	1	1	0	2	11%	0.67		
		13:00 - 15:00	0	1	2	3	17%	1.00		
		15:00 - 18:00	0	2	2	4	22%	1.33		
		18:00 - 24:00	0	3	2	5	28%	1.67		
	Direction	North	0	3	3	6	33%	2.00		
		South	0	3	1	4	22%	1.33		
		East	2	2	3	7	39%	2.33		
		West	0	0	1	1	6%	0.33		
		Unknown	0	0	0	0	0%	0.00		

3.16.3. Traffic Operation Conditions and Analysis

In order to identify the traffic operation characteristics and safety relevant conflicts, field observations at SW 137 Avenue and SW 136 Street were performed on a typical weekday on November 18, 2010. A summary of the traffic data is presented in *Figure 63*, and the field review is presented in *Figure 64*.

This intersection has single left-turn bays for northbound/southbound approaches, and the eastbound/westbound approaches have double left-turn lanes. The signal operation is split phases for eastbound and westbound traffic, and protected/permissive for northbound and southbound left-turn traffic.

Heavy traffic and long queues were observed for northbound and southbound approaches and eastbound/westbound left-turn traffic. Also, vehicles were observed changing lanes and weaving at these approaches.

This intersection presents a large offset alignment between northbound and southbound left-turn lanes. The northbound/southbound left-turn movement struggles to cross the opposing through movement.

Long queues were observed for westbound left-turn with vehicles spilling back and blocking the through lane. Speeding was observed for northbound and southbound approaches, and red light running was observed at the intersection.

3.16.4. Recommendations

Based on the safety analysis, field observations and traffic operations for the intersection of SW 137 Avenue and SW 136 Street, the following is recommended:

- Lengthen the westbound left-turn lane to 300 ft. and provide raised median.
- Retiming/optimizing of the existing signal while maintaining cycle length for both the AM and PM peak hours.
- Reduce the offset between northbound and southbound left turn lanes by reducing the median width and creating striped gores.
- Add pedestrian crosswalks, ADA approved pedestrian ramps and signal heads at east and south legs.
- Resurfacing the intersection.
- Refurbishing of pavement markings using thermoplastic painting.

A conceptual vision of the proposed roadway improvements is exhibited in *Figure 65*.

24-hr Approach Counts

Turning Movement Counts (TMC)

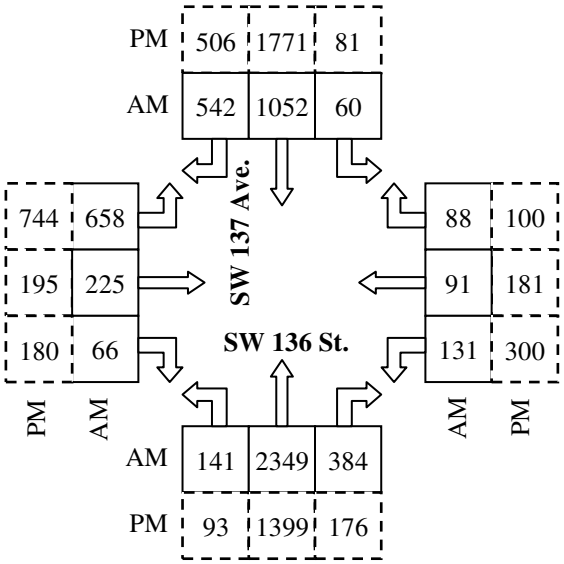

Figure 63: Traffic Data – *SW 137 Avenue and SW 136 Street*

New lane designation for Eastbound and Westbound right turn movements.

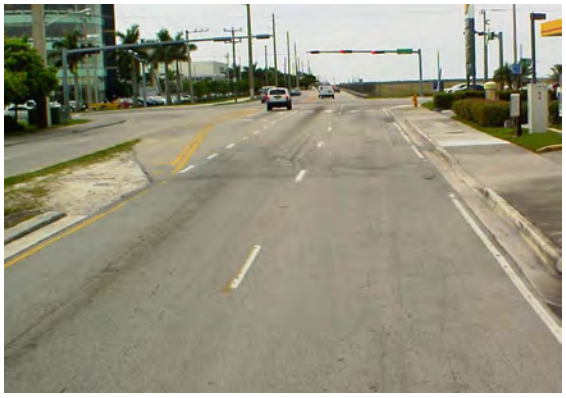

Westbound approach: Inadequate median length for left turn movement.

Southeast corner: No pedestrian ADA approved ramps.

Offset distance between Northbound and Southbound left turn movements.

Add pedestrian signal heads for North and West Legs.

Faded pavement markings and deteriorated pavement conditions.

Figure 64: Field Review – *SW 137 Avenue and SW 136 Street*

Figure 65: Conceptual Plan – *SW 137 Avenue and SW 136 Street*

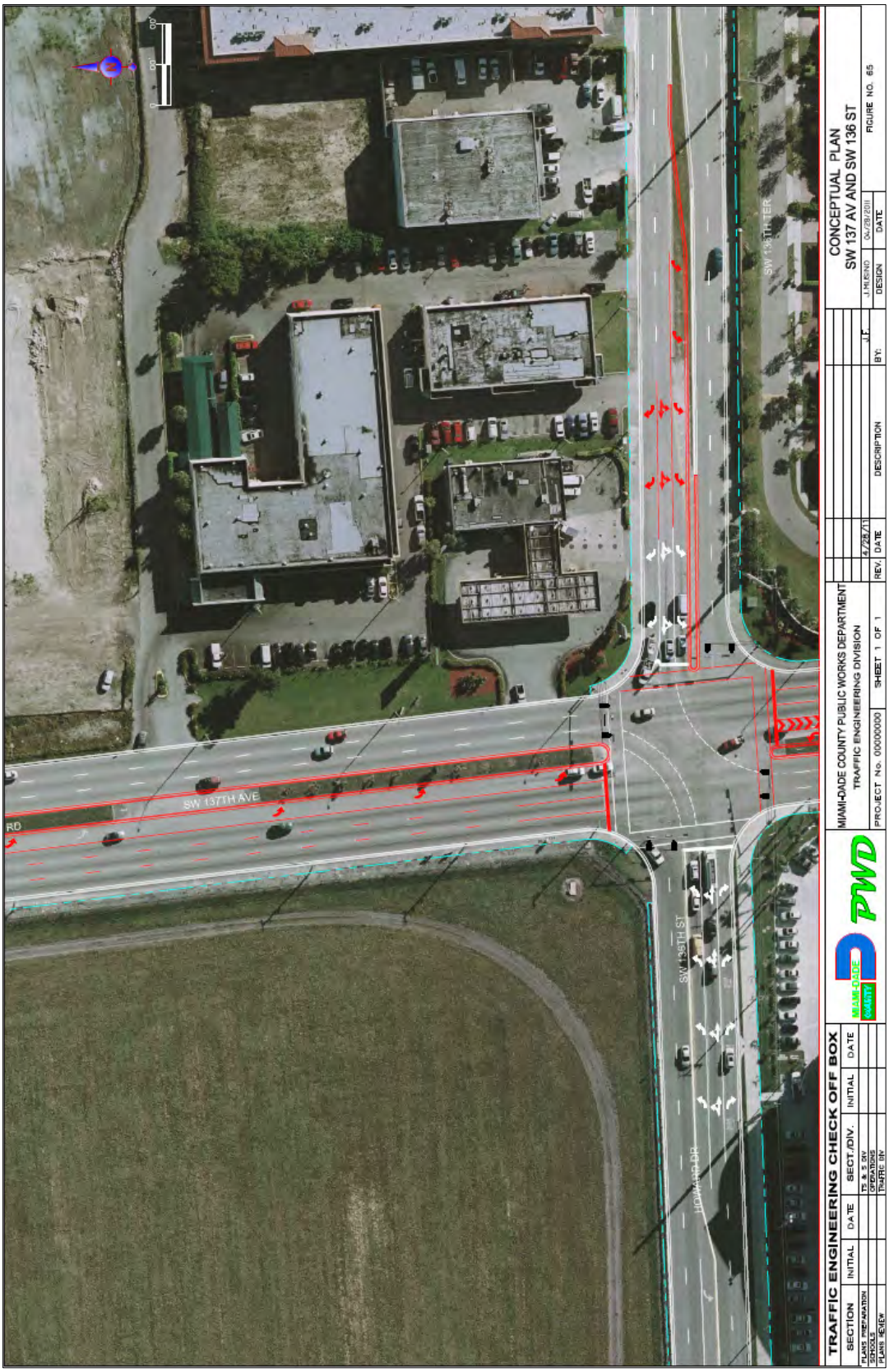

3.17. SW 97 Avenue and SW 24 Street

3.17.1. Site Description

This intersection is a signalized four legged intersection located in the unincorporated area of southwest Miami Dade County. SW 97 Avenue is a four lane urban arterial divided by a paved median that runs north-south, and SW 24 Street is a four lane urban arterial divided by a raised median that runs east-west.

3.17.2. Safety Conditions and Analysis

The intersection of SW 97 Avenue and SW 24 Street is ranked number 17 in our high crash locations list. A review of the hard copy police reports for the years 2006 through 2008 was performed. During the three-year analysis period, 67 relevant crashes occurred at the intersection. The analysis indicated that the average number of crashes per year is 22. The crash summaries, crash statistics and collision diagrams for the intersection are documented in *Appendix A*.

Based on the analysis of crash records for this intersection, the predominant types of crashes are shown in *Figure 66.*

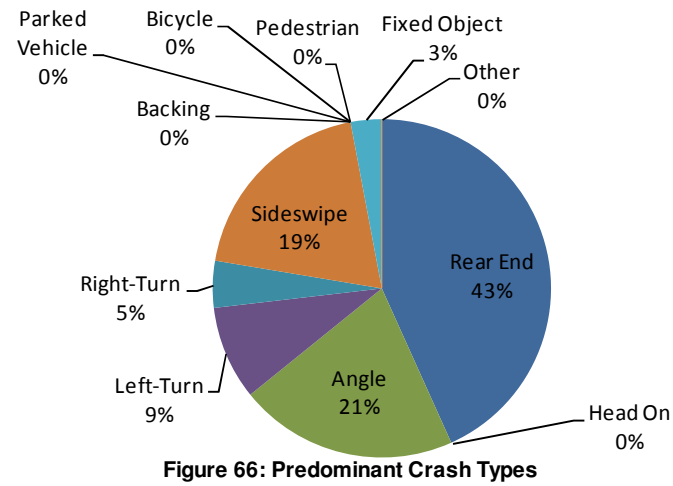

Figure 66: Predominant Crash Types SW 97 AVE & SW 24 ST

Calculated intersection mean crash per year were compared to the average Miami-Dade Crash Rate for County corridors to assess the safety conditions at the study intersection in relation to other roadways with similar traffic and geometric characteristics. This study is based on the 2007 FDOT's "Expected Value Analysis." *Table 38* illustrates the expected accident volume analysis of this intersection as well as the safety ratios and the confidence levels during the analysis period.

Based on a regression growth of 2% from the 2006 entering volume, the calculated safety ratios for the years 2006, 2007, and 2008 were 0.896, 1.135, and 1.500, respectively. The safety ratio for the three years averaged 1.177. Also, results of confidence level indicated that this intersection has been a high crash location during the three years with a confidence level higher than 99.95%.

From this analysis, it was determined that fixed object collisions presented abnormal crash pattern that exceeds the threshold limits for the 95th percentile and 90th percentile confidence level. Those results indicate that these types of collisions were abnormally high during the period of 2006 through 2008. A detailed review of the abnormal crashes as well as probable countermeasures is presented in *Table 39*.

Table 38 – Crash Analysis – SW 97 Avenue and SW 24 Street

SW 97 Avenue & SW 24 Street

(4 Lane x 4 Lane, Signalized, With Turn Lanes, 4 Leg Intersection-table28) - URBAN Spot

	TYPE OF CRASH	NUMBER OF CRASHES YEAR 2006	2007	2008	3 YEAR TOTAL CRASHE	% of Total	MEAN Accidents per Year	EXPECTED ANNUAL CRASH VALUE MEAN	90th Percentile	95th Percentile	ABNORMALLY HIGH CRASHES Mean	90th Percentil	95th Percentil
COLLISION TYPE	Rear End	7	12	10	29	22%	9.67	5.70	16.96	19.12	X		
	Head On	0	0	0	0	0%	0.00	0.33	1.02	1.15			
	Angle	2	7	5	14	9%	4.67	3.05	7.08	7.85	X		
	Left Turn	1	1	4	6	4%	2.00	1.67	4.02	4.47	X		
	Right Turn	0	1	2	3	2%	1.00	0.33	1.25	1.42	X		
	Sideswipe	6	1	6	13	7%	4.33	1.60	4.64	5.22	X		
	Backed Into	0	0	0	0	0%	0.00	0.17	0.56	0.63			
	Coll. w/ Parked Car	0	0	0	0	0%	0.00	0.10	0.51	0.59			
	Coll. w/ Pedestrian	0	0	0	0	0%	0.00	0.28	1.04	1.19			
	Coll. w/ Bicycle	0	0	0	0	0%	0.00	0.09	0.33	0.38			
	Fixed Object	1	0	1	2	1%	0.67	0.03	0.21	0.24	X	X	X
	Ran Off Road	0	0	0	0	0%	0.00	0.00	0.00	0.00			
	Overtuned	0	0	0	0	0%	0.00	0.03	0.21	0.24			
	Other	0	0	0	0	0%	0.00	3.70	8.83	9.82			
	Total Crashes	17	22	28	67	24%	22.33	17.77	40.96	45.39	X		
SEVERITY	PDO crashes	16	17	24	57	85%	19.00	9.93	22.30	24.67	X		
	Fatal crashes	0	0	0	0	0%	0.00	0.05	0.26	0.29			
	Injury crashes	1	5	4	10	15%	3.33	13.14	33.08	36.90			
LIGHT CONDITIONS	Day Light	13	13	22	48	72%	16.00	12.40	29.18	32.39	X		
	Dusk	0	0	0	0	0%	0.00	0.28	0.87	0.98			
	Dawn	0	0	0	0	0%	0.00	0.17	0.56	0.63			
	Dark	4	9	6	19	28%	6.33	4.56	10.53	11.68	X		
	Unknown	0	0	0	0	0%	0.00	0.35	1.05	1.18			
SURFACE CONDITIONS	Dry	12	16	18	46	69%	15.33	15.30	34.45	38.12	X		
	Wet	0	2	1	3	4%	1.00	2.10	6.02	6.76			
	Others	5	4	9	18	27%	6.00	0.37	1.10	1.24	X	X	X
MONTH OF A YEAR	January	0	2	2	4	6%	1.33	1.42	3.33	3.69			
	February	0	0	0	0	0%	0.00	1.42	3.53	3.93			
	March	0	3	1	4	6%	1.33	1.67	4.12	4.59			
	April	2	0	4	6	9%	2.00	1.30	3.21	3.57	X		
	May	1	1	1	3	4%	1.00	1.74	4.46	4.99			
	June	0	2	3	5	7%	1.67	1.38	3.49	3.90	X		
	July	2	4	2	8	12%	2.67	1.35	3.22	3.58	X		
	August	1	6	2	9	13%	3.00	1.56	3.99	4.46	X		
	September	4	1	7	12	18%	4.00	1.46	3.73	4.16	X	X	
	October	0	1	1	2	3%	0.67	1.47	3.59	4.00			
	November	5	2	4	11	16%	3.67	1.39	3.53	3.94	X	X	
	December	2	0	1	3	4%	1.00	1.61	4.43	4.97			
DAY OF THE WEEK	Sunday	1	3	5	9	13%	3.00	1.46	3.47	3.85	X		
	Monday	1	5	2	8	12%	2.67	2.70	6.42	7.13			
	Tuesday	7	2	5	14	21%	4.67	2.49	6.18	6.88	X		
	Wednesday	1	5	2	8	12%	2.67	2.56	5.84	6.47	X		
	Thursday	2	5	5	12	18%	4.00	2.88	7.20	8.03	X		
	Friday	3	2	6	11	16%	3.67	3.07	7.50	8.35	X		
	Saturday	2	0	3	5	7%	1.67	2.61	6.40	7.13			
HOUR OF THE DAY	00:00-06:00	1	3	3	7	10%	2.33	1.70	3.39	3.71	X		
	06:00-09:00	1	2	6	9	13%	3.00	1.98	5.12	5.72	X		
	09:00-11:00	1	2	1	4	6%	1.33	1.72	4.23	4.71			
	11:00-13:00	5	1	6	12	18%	4.00	2.40	6.30	7.05	X		
	13:00-15:00	2	2	4	8	12%	2.67	1.95	5.32	5.96	X		
	15:00-18:00	3	4	5	12	18%	4.00	3.58	7.81	8.62	X		
	18:00-24:00	4	8	3	15	22%	5.00	4.42	10.63	11.82	X		

	YEAR 1	2	3	3-Year Average
Average Daily Traffic ADT *(Vehicles per Day)*	57,074	58,238	59,427	58,246
Florida Average Crash rate *(Crashes per Million Entering Vehicles)*	0.420	0.424	0.394	0.413
Traffic Base	20.832	21.257	21.691	21.260
Actual Crash Rate *(Crashes per Million Entering Vehicles)*	0.816	1.035	1.291	1.047
Critical Crash Rate *(Crashes per Million Entering Vehicles)*	0.911	0.912	0.860	0.895
Safety Ratio	**0.896**	**1.135**	**1.500**	**1.177**
High Crash Location??	***NO***	***YES***	***YES***	***YES***

$$Actual\ \ Crash\ \ Rate = \frac{A \times 1{,}000{,}000}{V}$$

Where:
A = Total number of crashes or number of crashes by type occurring in a 1 year period.
V = Average Annual Daily Traffic X 365

$$CriticalCrashRate = AVR + \frac{0.5}{TB} + TF\sqrt{\frac{AVR}{TB}}$$

$$Traffic\ Base = \frac{Years \times ADT \times 365}{1{,}000{,}000}$$

$$Safety\ \ Ratio = \frac{Actual\ \ Crash\ \ Rate}{Critical\ \ Crash\ \ Rate}$$

Where:
AVR = Average Statewide Crash Rate for a particular type of intersection or roadway segment.
TB = Traffic Base
TF = Test Factor (z-value)
= 1.96 (assume 95% Confidence Level for RURAL areas)
= 3.29 (assume 99.95% Confidence Level for URBAN areas)

Confidence Level (%)	Constant Z
68.30	1.00
86.60	1.50
90.00	1.64
95.00	1.96
95.50	2.00
98.80	2.50
99.00	2.58
99.70	3.00
99.95	3.29

Table 39 – Abnormal Crash Details & Countermeasures SW 97 Avenue and SW 24 Street

SW 97 Avenue & SW 24 Street

(4 Lane x 4 Lane, Signalized, With Turn Lanes, 4 Leg Intersection-table28) - URBAN Spot

			NUMBER OF CRASHES YEAR			3 YEAR TOTAL CRASHE	% of Total	MEAN Accidents per Year	Possible Cause(s)	Counter-measure(s)
			2006	2007	2008					
Fixed Object	Total Fixed Object Crashes		**1**	**0**	**1**	**2**	**100%**	**0.67**	(6)	12
	Lighting Conditions	Day Light	0	0	0	0	0%	0.00	(17)	19
		Dawn	0	0	0	0	0%	0.00	(25)	28
		Dark	1	0	1	2	100%	0.67		
	Hours of Day	00:00 - 06:00	0	0	0	0	0%	0.00		
		06:00 - 09:00	0	0	0	0	0%	0.00		
		09:00 - 11:00	0	0	0	0	0%	0.00		
		11:00 - 13:00	0	0	0	0	0%	0.00		
		13:00 - 15:00	0	0	0	0	0%	0.00		
		15:00 - 18:00	0	0	0	0	0%	0.00		
		18:00 - 24:00	1	0	1	2	100%	0.67		
	Direction	North	0	0	1	1	50%	0.33		
		South	0	0	0	0	0%	0.00		
		East	0	0	0	0	0%	0.00		
		West	1	0	0	1	50%	0.33		
		Unknown	0	0	0	0	0%	0.00		

3.17.3. Traffic Operation Conditions and Analysis

In order to identify the traffic operation characteristics and safety relevant conflicts, field observations at SW 97 Avenue and SW 24 Street were performed on a typical weekday on November 2, 2010. A summary of the traffic data is presented in *Figure 67*, and the field review is presented in *Figure 68*.

This intersection has single left-turn bays for all approaches, and the northbound receiving lanes merge from two lanes to one lane. The signal operation is protected/permissive for all left-turn movements.

It was observed that the westbound left-turn lane is inadequate to handle the left-turn movement.

It was observed that the driveways in the southeast corner are located very close to the intersection. Also, extensive number of trees located in the southwest corner presents a hazard and visual obstruction.

The merging condition in the north leg needs warning signs. Additionally, lack of lighting was observed at the intersection.

Pedestrians (a high percentage is elderly) find it difficult to cross SW 24 Street due to short walk time. Also, red light running was observed at the intersection.

The southbound approach two-way middle lane needs to be modified to handle the southbound left-turn demand.

3.17.4. Recommendations

Based on the safety analysis, field observations and traffic operations for the intersection of SW 97 Avenue and SW 24 Street, the following is recommended:

- Lengthen the westbound left-turn lane to approximately 500 ft.
- Lengthen the southbound left-turn lane to approximately 350 ft.
- Increase the walk time for pedestrians crossing SW 24 Street.
- Install lane end and merge signs (W9-2L & W4-2) on north leg northbound.
- Install a 40 mph speed limit sign on east leg eastbound.
- Modify the landscape in the southwest corner to reduce the clutter of trees.
- Provide ADA approved pedestrian ramps at all corners.
- Refurbishing of pavement markings using thermoplastic painting.
- Improving lighting system at the intersection.

A conceptual vision of the proposed roadway improvements is exhibited in *Figure 69*.

24-hr Approach Counts

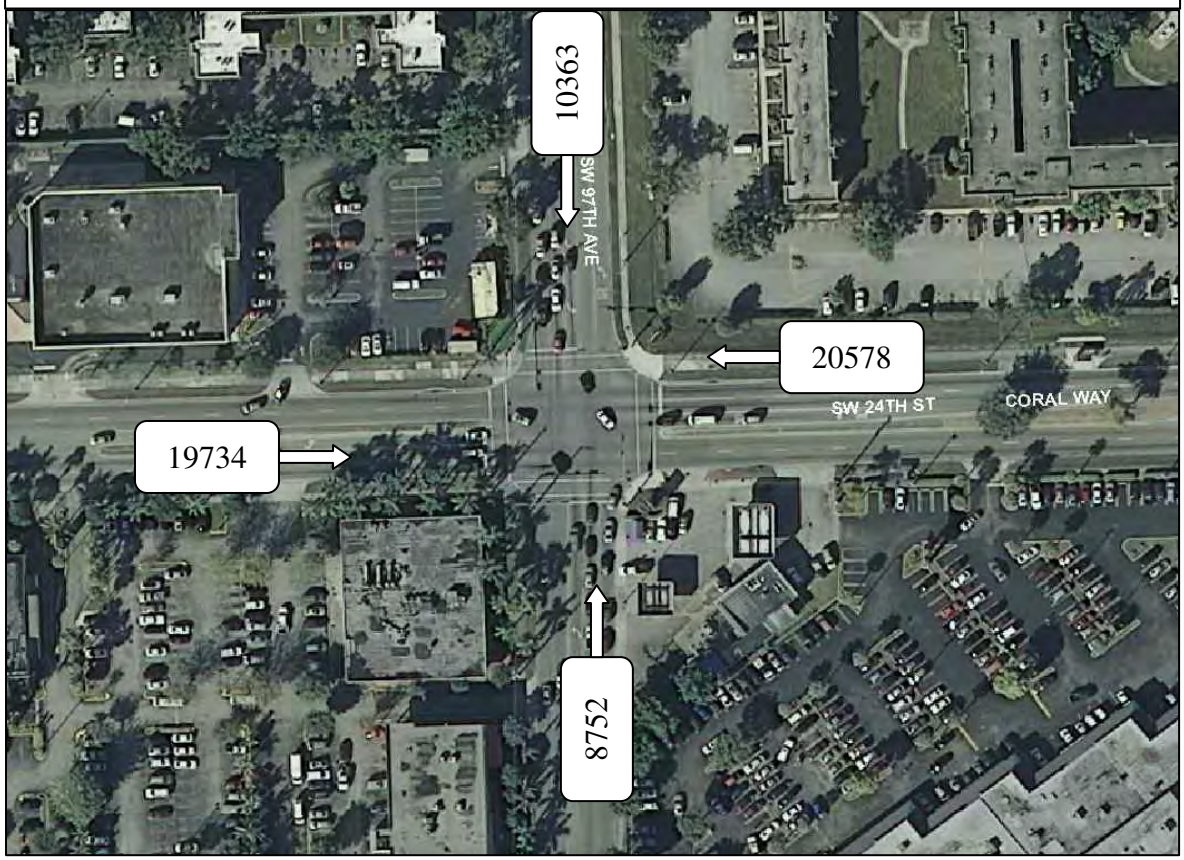

Turning Movement Counts (TMC)

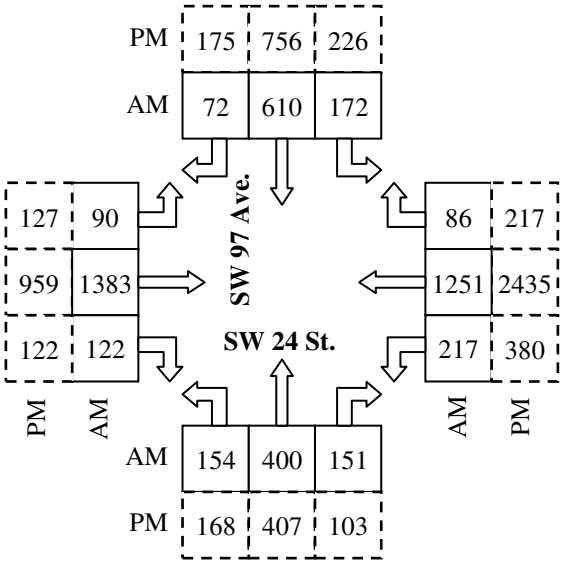

Figure 67: Traffic Data – *SW 97 Avenue and SW 24 Street*

Westbound approach: Large number of left-turn vehicles.

Southbound approach: Clutter of trees presents a visual obstruction.

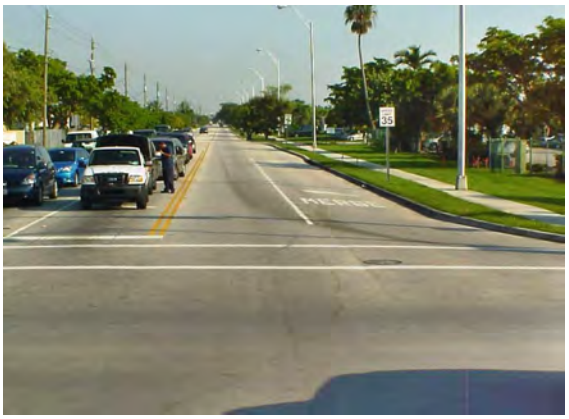

North leg northbound: Merging conditions with no warning signs.

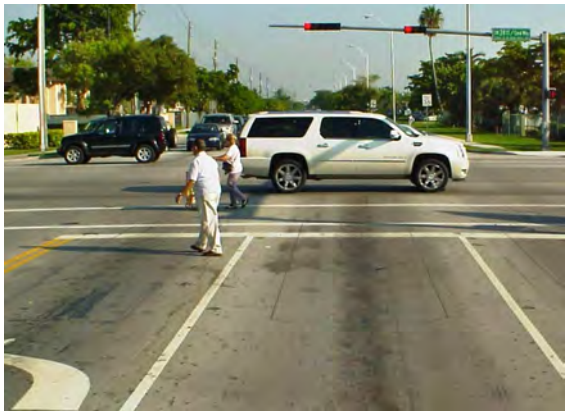

Pedestrian activity at the intersection, difficulty in crossing SW 24 Street.

North leg: Lack of ADA approved pedestrian ramps.

Faded pavement markings.

Figure 68: Field Review – *SW 97 Avenue and SW 24 Street*

Figure 69: Conceptual Plan – *SW 97 Avenue and SW 24 Street*

3.18. SW 122 Avenue and SW 26 Street (Coral Way)

3.18.1. Site Description

This intersection is a signalized four legged intersection located in the unincorporated area of southwest Miami Dade County. SW 122 Avenue is a four lane major collector divided by a paved median that runs north-south, and SW 26 Street (Coral Way) is a four lane urban arterial divided by a raised median that runs east-west.

3.18.2. Safety Conditions and Analysis

The intersection of SW 122 Avenue and SW 26 Street is ranked number 18 in our high crash locations list. A review of the hard copy police reports for the years 2006 through 2008 was performed. During the three-year analysis period, 78 relevant crashes occurred at the intersection. The analysis indicated that the average number of crashes per year is 26. The crash summaries, crash statistics and collision diagrams for the intersection are documented in *Appendix A*.

Based on the analysis of crash records for this intersection, the predominant types of crashes are shown in *Figure 70.*

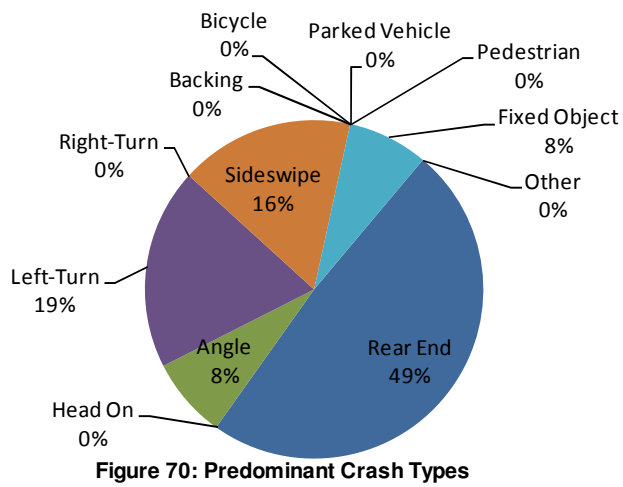

Figure 70: Predominant Crash Types SW 122 AVE & SW 26 ST

Calculated intersection mean crash per year were compared to the average Miami-Dade Crash Rate for County corridors to assess the safety conditions at the study intersection in relation to other roadways with similar traffic and geometric characteristics. This study is based on the 2007 FDOT's "Expected Value Analysis." *Table 40* illustrates the expected accident volume analysis of this intersection as well as the safety ratios and the confidence levels during the analysis period.

Based on a regression growth of 2% from the 2006 entering volume, the calculated safety ratios for the years 2006, 2007, and 2008 were 1.236, 1.631, and 1.312, respectively. The safety ratio for the three years averaged 1.393. Also, results of confidence level indicated that this intersection has been a high crash location during the three years with a confidence level higher than 99.95%.

From this analysis, it was determined that left-turn and fixed object collisions presented abnormal crash patterns that exceed the threshold limits for the 95th percentile and 90th percentile confidence level. Those results indicate that these types of collisions were abnormally high during the period of 2006 through 2008. A detailed review of the abnormal crashes as well as probable countermeasures is presented in *Table 41*.

Table 40 – Crash Analysis – SW 122 Avenue and SW 26 Street

SW 122 Avenue & SW 26 Street

(4 Lane x 4 Lane, Signalized, With Turn Lanes, 4 Leg Intersection-divided-Table28) - URBAN Spot

	TYPE OF CRASH	NUMBER OF CRASHES YEAR 2006	2007	2008	3 YEAR TOTAL CRASHE	% of Total	MEAN Accidents per Year	EXPECTED ANNUAL CRASH VALUE MEAN	90th Percentile	95th Percentile	ABNORMALLY HIGH CRASHES Mean	90th Percentil	95th Percentil
COLLISION TYPE	Rear End	9	15	14	38	24%	12.67	5.70	16.96	19.12	X		
	Head On	0	0	0	0	0%	0.00	0.33	1.02	1.15			
	Angle	2	4	0	6	3%	2.00	3.05	7.08	7.85			
	Left Turn	6	3	6	15	8%	5.00	1.67	4.02	4.47	X	X	X
	Right Turn	0	0	0	0	0%	0.00	0.33	1.25	1.42			
	Sideswipe	5	5	3	13	6%	4.33	1.60	4.64	5.22	X		
	Backed Into	0	0	0	0	0%	0.00	0.17	0.56	0.63			
	Coll. w/ Parked Car	0	0	0	0	0%	0.00	0.10	0.51	0.59			
	Coll. w/ Pedestrian	0	0	0	0	0%	0.00	0.28	1.04	1.19			
	Coll. w/ Bicycle	0	0	0	0	0%	0.00	0.09	0.33	0.38			
	Fixed Object	1	4	1	6	2%	2.00	0.03	0.21	0.24	X	X	X
	Ran Off Road	0	0	0	0	0%	0.00	0.00	0.00	0.00			
	Overtuned	0	0	0	0	0%	0.00	0.03	0.21	0.24			
	Other	0	0	0	0	0%	0.00	3.70	8.83	9.82			
	Total Crashes	23	31	24	78	23%	26.00	17.77	40.96	45.39	X		
SEVERITY	PDO crashes	22	27	21	70	90%	23.33	9.93	22.30	24.67	X	X	
	Fatal crashes	0	0	0	0	0%	0.00	0.05	0.26	0.29			
	Injury crashes	1	4	3	8	10%	2.67	13.14	33.08	36.90			
LIGHT CONDITIONS	Day Light	18	21	16	55	71%	18.33	12.40	29.18	32.39	X		
	Dusk	0	1	0	1	1%	0.33	0.28	0.87	0.98	X		
	Dawn	0	0	0	0	0%	0.00	0.17	0.56	0.63			
	Dark	4	9	8	21	27%	7.00	4.56	10.53	11.68	X		
	Unknown	1	0	0	1	1%	0.33	0.35	1.05	1.18			
SURFACE CONDITIONS	Dry	10	28	19	57	73%	19.00	15.30	34.45	38.12	X		
	Wet	6	3	4	13	17%	4.33	2.10	6.02	6.76	X		
	Others	7	0	1	8	10%	2.67	0.37	1.10	1.24	X	X	X
MONTH OF A YEAR	January	1	3	3	7	9%	2.33	1.42	3.33	3.69	X		
	February	2	3	0	5	6%	1.67	1.42	3.53	3.93	X		
	March	2	5	2	9	12%	3.00	1.67	4.12	4.59	X		
	April	0	5	2	7	9%	2.33	1.30	3.21	3.57	X		
	May	0	4	3	7	9%	2.33	1.74	4.46	4.99	X		
	June	2	4	2	8	10%	2.67	1.38	3.49	3.90	X		
	July	3	1	1	5	6%	1.67	1.35	3.22	3.58	X		
	August	1	2	5	8	10%	2.67	1.56	3.99	4.46	X		
	September	4	4	4	12	15%	4.00	1.46	3.73	4.16	X	X	
	October	2	0	1	3	4%	1.00	1.47	3.59	4.00			
	November	3	0	0	3	4%	1.00	1.39	3.53	3.94			
	December	3	0	1	4	5%	1.33	1.61	4.43	4.97			
DAY OF THE WEEK	Sunday	4	2	2	8	10%	2.67	1.46	3.47	3.85	X		
	Monday	3	3	4	10	13%	3.33	2.70	6.42	7.13	X		
	Tuesday	3	8	4	15	19%	5.00	2.49	6.18	6.88	X		
	Wednesday	2	5	5	12	15%	4.00	2.56	5.84	6.47	X		
	Thursday	1	7	6	14	18%	4.67	2.88	7.20	8.03	X		
	Friday	6	1	2	9	12%	3.00	3.07	7.50	8.35			
	Saturday	4	5	1	10	13%	3.33	2.61	6.40	7.13	X		
HOUR OF THE DAY	00:00-06:00	0	4	0	4	5%	1.33	1.70	3.39	3.71			
	06:00-09:00	3	4	1	8	10%	2.67	1.98	5.12	5.72	X		
	09:00-11:00	1	4	3	8	10%	2.67	1.72	4.23	4.71	X		
	11:00-13:00	7	3	2	12	15%	4.00	2.40	6.30	7.05	X		
	13:00-15:00	1	3	1	5	6%	1.67	1.95	5.32	5.96			
	15:00-18:00	7	8	8	23	29%	7.67	3.58	7.81	8.62	X		
	18:00-24:00	4	5	9	18	23%	6.00	4.42	10.63	11.82	X		

	YEAR 1	2	3	3-Year Average
Average Daily Traffic ADT *(Vehicles per Day)*	55,501	56,633	57,789	56,641
Florida Average Crash rate *(Crashes per Million Entering Vehicles)*	0.420	0.424	0.394	0.413
Traffic Base	20.258	20.671	21.093	20.674
Actual Crash Rate *(Crashes per Million Entering Vehicles)*	1.135	1.500	1.138	1.258
Critical Crash Rate *(Crashes per Million Entering Vehicles)*	0.918	0.919	0.867	0.902
Safety Ratio	**1.236**	**1.631**	**1.312**	**1.393**
High Crash Location??	***YES***	***YES***	***YES***	***YES***

$$Actual\ \ Crash\ \ Rate = \frac{A \times 1{,}000{,}000}{V}$$

Where:
A = Total number of crashes or number of crashes by type occurring in a 1 year period.
V = Average Annual Daily Traffic X 365

$$CriticalCrashRate = AVR + \frac{0.5}{TB} + TF\sqrt{\frac{AVR}{TB}}$$

Where:
AVR = Average Statewide Crash Rate for a particular type of intersection or roadway segment.
TB = Traffic Base
TF = Test Factor (z-value)
= *1.96 (assume 95% Confidence Level for RURAL areas)*
= *3.29 (assume 99.95% Confidence Level for URBAN areas)*

$$Traffic\ Base = \frac{Years \times ADT \times 365}{1{,}000{,}000}$$

$$Safety\ \ Ratio = \frac{Actual\ \ Crash\ \ Rate}{Critical\ \ Crash\ \ Rate}$$

Confidence Level (%)	Constant Z
68.30	1.00
86.60	1.50
90.00	1.64
95.00	1.96
95.50	2.00
98.80	2.50
99.00	2.58
99.70	3.00
99.95	3.29

Table 41 – Abnormal Crash Details & Countermeasures SW 122 Avenue and SW 26 Street

SW 122 Avenue & SW 26 Street

(4 Lane x 4 Lane, Signalized, With Turn Lanes, 4 Leg Intersection-divided-Table28) - URBAN Spot

			NUMBER OF CRASHES YEAR			3 YEAR TOTAL CRASHE	% of Total	MEAN Accidents per Year	Possible Cause(s)	Counter-measure(s)
			2006	2007	2008					
Left Turn	Total Left TurnCrashes		**6**	**3**	**6**	**15**	**100%**	**5.00**	(4)	6
	Lighting Conditions	Day Light	3	2	4	9	60%	3.00	(6)	12
		Dawn	0	0	0	0	0%	0.00	(9)	13
		Dark	3	1	2	6	40%	2.00	(13)	
	Hours of Day	00:00 - 06:00	0	1	0	1	7%	0.33		
		06:00 - 09:00	0	0	0	0	0%	0.00		
		09:00 - 11:00	0	0	0	0	0%	0.00		
		11:00 - 13:00	2	0	1	3	20%	1.00		
		13:00 - 15:00	0	1	0	1	7%	0.33		
		15:00 - 18:00	1	1	2	4	27%	1.33		
		18:00 - 24:00	3	0	3	6	40%	2.00		
	Direction	NB → WB	1	0	0	1	7%	0.33		
		WB → SB	2	1	3	6	40%	2.00		
		SB → EB	0	0	0	0	0%	0.00		
		EB → NB	1	2	3	6	40%	2.00		
		Unknown	2	0	0	2	13%	0.67		

			NUMBER OF CRASHES YEAR			3 YEAR TOTAL CRASHE	% of Total	MEAN Accidents per Year	Possible Cause(s)	Counter-measure(s)
			2006	2007	2008					
Fixed Object	Total Fixed Object Crashes		**1**	**4**	**1**	**6**	**100%**	**2.00**	(6)	12
	Lighting Conditions	Day Light	1	1	0	2	33%	0.67	(11)	17
		Dawn	0	1	0	1	17%	0.33	(16)	20
		Dark	0	2	1	3	50%	1.00	(17)	
	Hours of Day	00:00 - 06:00	0	2	0	2	33%	0.67		
		06:00 - 09:00	0	0	0	0	0%	0.00		
		09:00 - 11:00	0	0	0	0	0%	0.00		
		11:00 - 13:00	0	0	0	0	0%	0.00		
		13:00 - 15:00	0	0	0	0	0%	0.00		
		15:00 - 18:00	1	1	0	2	33%	0.67		
		18:00 - 24:00	0	1	1	2	33%	0.67		
	Direction	North	1	0	0	1	17%	0.33		
		South	0	1	0	1	17%	0.33		
		East	0	3	1	4	67%	1.33		
		West	0	0	0	0	0%	0.00		
		Unknown	0	0	0	0	0%	0.00		

3.18.3. Traffic Operation Conditions and Analysis

In order to identify the traffic operation characteristics and safety relevant conflicts, field observations at SW 122 Avenue and SW 26 Street were performed on a typical weekday on November 2, 2010. A summary of the traffic data is presented in *Figure 71*, and the field review is presented in *Figure 72*.

This intersection has single left-turn bays for all approaches, and the westbound approach has an exclusive right-turn bay. The signal operation is protected/permissive for all left-turn movements.

Long queues were observed for southbound and westbound left-turns with vehicles spilling back and blocking the through lanes. Also the westbound left-turn movement struggles to cross the opposing eastbound through movement.

The merging condition in the south leg needs warning signs. Also, there are no warning signs for eastbound/westbound traffic to alert motorists of the curved east leg and the signal.

Red light running was observed at the intersection. Additionally, lack of lighting was observed at the intersection.

Lack of pedestrian features on the north and west legs was observed, and pedestrian ramps need to be ADA approved.

3.18.4. Recommendations

Based on the safety analysis, field observations and traffic operations for the intersection of SW 122 Avenue and SW 26 Street, the following is recommended:

- Lengthen the westbound left-turn lane to approximately 350 ft.
- Lengthen the southbound left-turn lane to approximately 500 ft.
- Retiming/optimizing of the existing signal while maintaining cycle length for both the AM and PM peak hours.
- Reduce the offset between eastbound and westbound left turn lanes by reducing the swale area in the southeast corner and shifting the median to the south.
- Installing curve warning signs (W1-2) for both eastbound and westbound approaches and "Signal Ahead" signs (W3-3) for westbound approach.
- Install lane end and merge signs (W9-2L & W4-2) on south leg southbound.
- Provide pedestrian signal heads to cross the north and west legs.
- Refurbishing of pavement markings using thermoplastic painting.
- Improving lighting system at the intersection.

A conceptual vision of the proposed roadway improvements is exhibited in *Figure 73*.

24-hr Approach Counts

Turning Movement Counts (TMC)

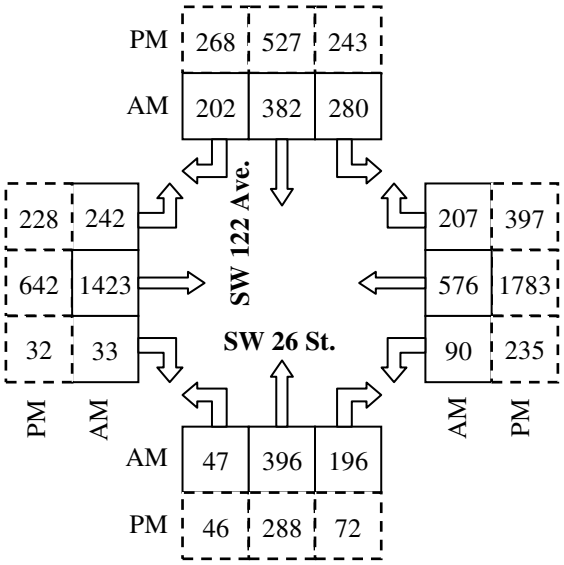

Figure 71: Traffic Data – *SW 122 Avenue and SW 26 Street*

Eastbound/Westbound: Offset plus curve makes it difficult for left-turns to see oncoming through traffic.

North leg northbound: Merging conditions with no warning signs.

Westbound approach: Curve approaching a signal with no warning signs.

West & North legs: lack of pedestrian signal heads.

Eastbound approach: Approaching a curve with no warning signs.

Eastbound approach: Tire skid marks.

Figure 72: Field Review – *SW 122 Avenue and SW 26 Street*

Figure 73: Conceptual Plan – *SW 122 Avenue and SW 26 Street*

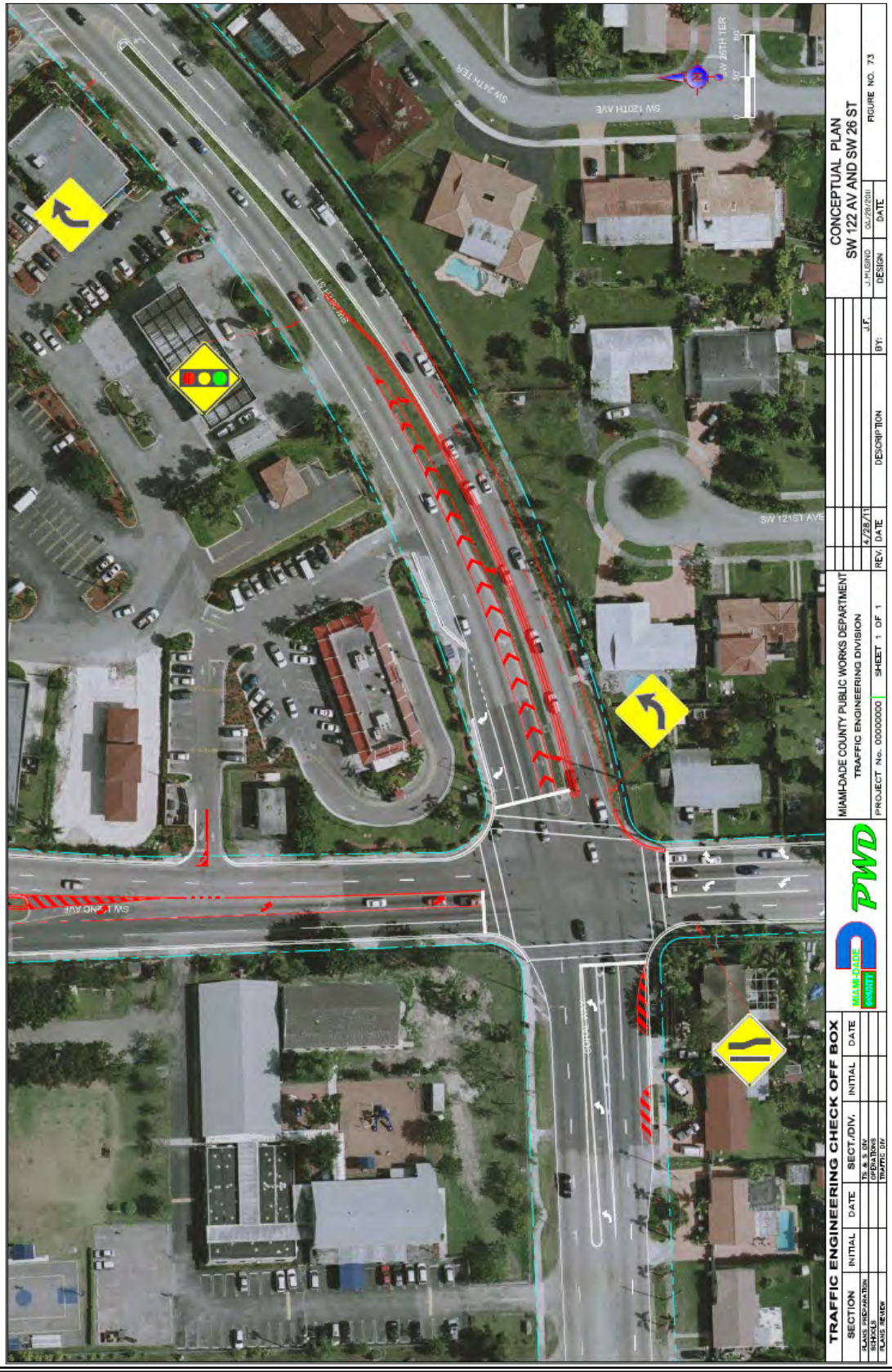

3.19. NW 79 Avenue and NW 58 Street

3.19.1. Site Description

This intersection is a signalized four legged intersection located in the northwest part of Miami Dade County at the limit between unincorporated area and the City of Doral. NW 79 Avenue is a four lane major collector divided by a paved median that runs north-south, and NW 58 Street is a six lane arterial divided by a raised median that runs east-west.

3.19.2. Safety Conditions and Analysis

The intersection of NW 79 Avenue and NW 58 Street is ranked number 19 in our high crash locations list. A review of the hard copy police reports for the years 2006 through 2008 was performed. During the three-year analysis period, 100 relevant crashes occurred at the intersection. The analysis indicated that the average number of crashes per year is 33. The crash summaries, crash statistics and collision diagrams for the intersection are documented in *Appendix A*.

Based on the analysis of crash records for this intersection, the predominant types of crashes are shown in *Figure 74*.

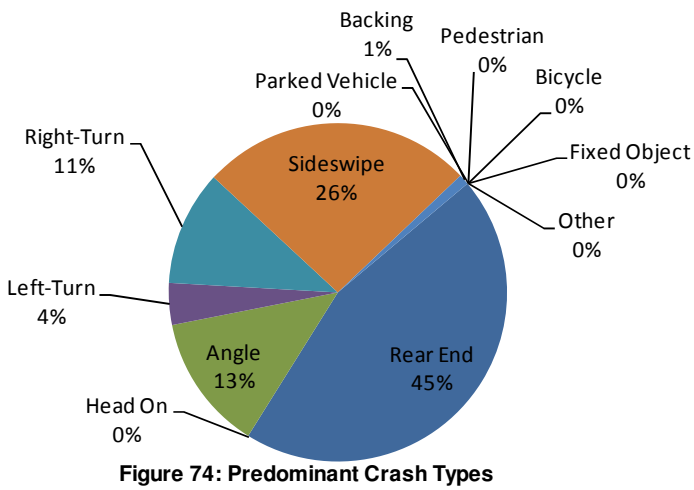

Figure 74: Predominant Crash Types NW 79 AVE & NW 58 ST

Calculated intersection mean crash per year were compared to the average Miami-Dade Crash Rate for County corridors to assess the safety conditions at the study intersection in relation to other roadways with similar traffic and geometric characteristics. This study is based on the 2007 FDOT's "Expected Value Analysis." *Table 42* illustrates the expected accident volume analysis of this intersection as well as the safety ratios and the confidence levels during the analysis period.

Based on a regression growth of 2% from the 2006 entering volume, the calculated safety ratios for the years 2006, 2007, and 2008 were 0.852, 1.419, and 1.148, respectively. The safety ratio for the three years averaged 1.140. Also, results of confidence level indicated that this intersection has been a high crash location during the three years with a confidence level higher than 99.95%.

From this analysis, it was determined that right-turn and sideswipe collisions presented abnormal crash patterns that exceed the threshold limits for the 95th percentile and 90th percentile confidence level. Those results indicate that these types of collisions were abnormally high during the period of 2006 through 2008. A detailed review of the abnormal crashes as well as probable countermeasures is presented in *Table 43*.

Table 42 – Crash Analysis – NW 79 Avenue and NW 58 Street

NW 79 Avenue & NW 58 Street

(4 Lane x 4 Lane, Signalized, With Turn Lanes, 4 Leg Intersection-Table 28) - URBAN Spot

	TYPE OF CRASH	NUMBER OF CRASHES YEAR 2006	2007	2008	3 YEAR TOTAL CRASHE	% of Total	MEAN Accidents per Year	EXPECTED ANNUAL CRASH VALUE MEAN	90th Percentile	95th Percentile	ABNORMALLY HIGH CRASHES Mean	90th Percentil	95th Percentil
COLLISION TYPE	Rear End	10	19	16	45	23%	15.00	5.70	16.96	19.12	X		
	Head On	0	0	0	0	0%	0.00	0.33	1.02	1.15			
	Angle	4	6	3	13	5%	4.33	3.05	7.08	7.85	X		
	Left Turn	0	1	3	4	2%	1.33	1.67	4.02	4.47			
	Right Turn	6	3	2	11	3%	3.67	0.33	1.25	1.42	X	X	X
	Sideswipe	4	13	9	26	8%	8.67	1.60	4.64	5.22	X	X	X
	Backed Into	1	0	0	1	0%	0.33	0.17	0.56	0.63	X		
	Coll. w/ Parked Car	0	0	0	0	0%	0.00	0.10	0.51	0.59			
	Coll. w/ Pedestrian	0	0	0	0	0%	0.00	0.28	1.04	1.19			
	Coll. w/ Bicycle	0	0	0	0	0%	0.00	0.09	0.33	0.38			
	Fixed Object	0	0	0	0	0%	0.00	0.03	0.21	0.24			
	Ran Off Road	0	0	0	0	0%	0.00	0.00	0.00	0.00			
	Overtuned	0	0	0	0	0%	0.00	0.03	0.21	0.24			
	Other	0	0	0	0	0%	0.00	3.70	8.83	9.82			
	Total Crashes	25	42	33	100	24%	33.33	17.77	40.96	45.39	X		
SEVERITY	PDO crashes	23	42	32	97	97%	32.33	9.93	22.30	24.67	X	X	X
	Fatal crashes	1	0	0	1	1%	0.33	0.05	0.26	0.29	X	X	X
	Injury crashes	1	0	1	2	2%	0.67	13.14	33.08	36.90			
LIGHT CONDITIONS	Day Light	20	38	30	88	88%	29.33	12.40	29.18	32.39	X	X	
	Dusk	0	0	0	0	0%	0.00	0.28	0.87	0.98			
	Dawn	0	0	1	1	1%	0.33	0.17	0.56	0.63	X		
	Dark	5	4	2	11	11%	3.67	4.56	10.53	11.68			
	Unknown	0	0	0	0	0%	0.00	0.35	1.05	1.18			
SURFACE CONDITIONS	Dry	18	39	27	84	84%	28.00	15.30	34.45	38.12	X		
	Wet	2	2	3	7	7%	2.33	2.10	6.02	6.76	X		
	Others	5	1	3	9	9%	3.00	0.37	1.10	1.24	X	X	X
MONTH OF A YEAR	January	1	3	1	5	5%	1.67	1.42	3.33	3.69	X		
	February	0	5	2	7	7%	2.33	1.42	3.53	3.93	X		
	March	1	0	1	2	2%	0.67	1.67	4.12	4.59			
	April	7	3	5	15	15%	5.00	1.30	3.21	3.57	X	X	X
	May	1	3	3	7	7%	2.33	1.74	4.46	4.99	X		
	June	5	4	2	11	11%	3.67	1.38	3.49	3.90	X	X	
	July	2	2	2	6	6%	2.00	1.35	3.22	3.58	X		
	August	3	2	8	13	13%	4.33	1.56	3.99	4.46	X	X	
	September	2	5	5	12	12%	4.00	1.46	3.73	4.16	X	X	
	October	0	6	1	7	7%	2.33	1.47	3.59	4.00	X		
	November	1	5	2	8	8%	2.67	1.39	3.53	3.94	X		
	December	2	4	1	7	7%	2.33	1.61	4.43	4.97	X		
DAY OF THE WEEK	Sunday	2	0	3	5	5%	1.67	2.70	6.42	7.13			
	Monday	3	7	5	15	15%	5.00	2.49	6.18	6.88	X		
	Tuesday	4	12	6	22	22%	7.33	2.56	5.84	6.47	X	X	X
	Wednesday	3	10	5	18	18%	6.00	2.88	7.20	8.03	X		
	Thursday	3	8	6	17	17%	5.67	3.07	7.50	8.35	X		
	Friday	7	5	6	18	18%	6.00	2.61	6.40	7.13	X		
	Saturday	3	0	2	5	5%	1.67	1.46	3.47	3.85	X		
HOUR OF THE DAY	00:00-06:00	0	0	1	1	1%	0.33	1.70	3.39	3.71			
	06:00-09:00	2	6	7	15	15%	5.00	1.98	5.12	5.72	X		
	09:00-11:00	3	2	5	10	10%	3.33	1.72	4.23	4.71	X		
	11:00-13:00	4	6	5	15	15%	5.00	2.40	6.30	7.05	X		
	13:00-15:00	2	8	4	14	14%	4.67	1.95	5.32	5.96	X		
	15:00-18:00	8	14	7	29	29%	9.67	3.58	7.81	8.62	X	X	X
	18:00-24:00	6	6	4	16	16%	5.33	4.42	10.63	11.82	X		

	YEAR 1	2	3	3-Year Average
Average Daily Traffic ADT *(Vehicles per Day)*	88,168	89,967	91,803	89,979
Florida Average Crash rate *(Crashes per Million Entering Vehicles)*	0.490	0.486	0.458	0.478
Traffic Base	32.181	32.838	33.508	32.842
Actual Crash Rate *(Crashes per Million Entering Vehicles)*	0.777	1.279	0.985	1.014
Critical Crash Rate *(Crashes per Million Entering Vehicles)*	0.912	0.901	0.858	0.890
Safety Ratio	**0.852**	**1.419**	**1.148**	**1.140**
High Crash Location??	***NO***	***YES***	***YES***	***YES***

$$Actual\ \ Crash\ \ Rate = \frac{A \times 1{,}000{,}000}{V}$$

Where:
A = Total number of crashes or number of crashes by type occurring in a 1 year period.
V = Average Annual Daily Traffic X 365

$$CriticalCrashRate = AVR + \frac{0.5}{TB} + TF\sqrt{\frac{AVR}{TB}}$$

Where:
AVR = Average Statewide Crash Rate for a particular type of intersection or roadway segment.
TB = Traffic Base
TF = Test Factor (z-value)
= *1.96 (assume 95% Confidence Level for RURAL areas)*
= *3.29 (assume 99.95% Confidence Level for URBAN areas)*

$$Traffic\ Base = \frac{Years \times ADT \times 365}{1{,}000{,}000}$$

$$Safety\ \ Ratio = \frac{Actual\ \ Crash\ \ Rate}{Critical\ \ Crash\ \ Rate}$$

Confidence Level (%)	Constant Z
68.30	1.00
86.60	1.50
90.00	1.64
95.00	1.96
95.50	2.00
98.80	2.50
99.00	2.58
99.70	3.00
99.95	3.29

Table 43 – Abnormal Crash Details & Countermeasures NW 79 Avenue and NW 58 Street

NW 79 Avenue & NW 58 Street

(4 Lane x 4 Lane, Signalized, With Turn Lanes, 4 Leg Intersection -Table 28) - URBAN Spot

			NUMBER OF CRASHES YEAR 2006	2007	2008	3 YEAR TOTAL CRASHE	% of Total	MEAN Accidents per Year	Possible Cause(s)	Counter-measure(s)
Right Turn	Total Right Turn Crashes		**6**	**3**	**2**	**11**	**100%**	**3.67**	(1)	4
	Lighting Conditions	Day Light	6	3	2	11	100%	3.67	(8)	9
		Dawn	0	0	0	0	0%	0.00	(9)	21
		Dark	0	0	0	0	0%	0.00		
	Hours of Day	00:00 - 06:00	0	0	0	0	0%	0.00		
		06:00 - 09:00	1	0	1	2	18%	0.67		
		09:00 - 11:00	1	0	1	2	18%	0.67		
		11:00 - 13:00	2	0	0	2	18%	0.67		
		13:00 - 15:00	0	2	0	2	18%	0.67		
		15:00 - 18:00	2	1	0	3	27%	1.00		
		18:00 - 24:00	0	0	0	0	0%	0.00		
	Direction	NB→EB	4	2	1	7	64%	2.33		
		EB→SB	0	0	0	0	0%	0.00		
		WB→NB	2	1	1	4	36%	1.33		
		SB→WB	0	0	0	0	0%	0.00		
		Unknown	0	0	0	0	0%	0.00		

			NUMBER OF CRASHES YEAR 2006	2007	2008	3 YEAR TOTAL CRASHE	% of Total	MEAN Accidents per Year	Possible Cause(s)	Counter-measure(s)
Sideswipe (Overtake)	Total Sideswipe Crashes		**4**	**13**	**9**	**26**	**100%**	**8.67**	(16)	19
	Lighting Conditions	Day Light	3	11	9	23	88%	7.67	(17)	20
		Dawn	0	0	0	0	0%	0.00	(19)	21
		Dark	1	2	0	3	12%	1.00	(20)	22
	Hours of Day	00:00 - 06:00	0	0	0	0	0%	0.00		
		06:00 - 09:00	1	1	1	3	12%	1.00		
		09:00 - 11:00	0	2	3	5	19%	1.67		
		11:00 - 13:00	0	3	1	4	15%	1.33		
		13:00 - 15:00	1	4	1	6	23%	2.00		
		15:00 - 18:00	1	2	3	6	23%	2.00		
		18:00 - 24:00	1	1	0	2	8%	0.67		
	Direction	North	1	1	1	3	12%	1.00		
		South	2	2	4	8	31%	2.67		
		East	1	3	3	7	27%	2.33		
		West	0	7	1	8	31%	2.67		
		Unknown	0	0	0	0	0%	0.00		

3.19.3. Traffic Operation Conditions and Analysis

In order to identify the traffic operation characteristics and safety relevant conflicts, field observations at NW 79 Avenue and NW 58 Street were performed on a typical weekday on November 23, 2010. A summary of the traffic data is presented in *Figure 75*, and the field review is presented in *Figure 76*.

This intersection has single left-turn bays for all approaches, except the southbound which has double left-turn lanes. The northbound, eastbound and westbound approaches have exclusive right-turn lanes. The signal operation is split phases for northbound and southbound traffic, and protected/permissive for eastbound and westbound left-turns.

This intersection handles a large number of heavy vehicles and trucks. Long queues were observed for northbound and westbound left-turns with vehicles were spilling back and blocking the through lane. Also, this east/west left-turn movement struggles to cross the opposing through movement.

There are no warning signs for southbound traffic to alert motorists of the curve and the approaching signal.

It was noticed that the wide recess at the southeast corner is confusing and motorists sometimes use it to park their vehicles. Also, due to that recess, northbound right-turns find it difficult to make a safe turn.

Red light running was observed at the intersection. Additionally, lack of lighting was observed at the intersection.

The eastbound right-turning vehicles suffer an inadequate turning radius to handle heavy vehicles and trucks.

Considerable weaving was observed in the eastbound/westbound and southbound approaches due to SR-826 ramps east of the intersection.

Capacity analysis was conducted for AM and PM traffic peak hours to evaluate existing conditions as well as improvements. *Table 44* depicts the analysis performed using Synchro 6.0. An assessment of Level of Services (LOS) analysis for peak periods indicated that this intersection is operating at LOS C during the AM peak period, and a failing LOS F during the PM peak. In addition, these analyses indicated that the northbound, southbound and eastbound movements are operating under substantial delay that generates failing conditions (LOS E & F) during the PM peak hours.

The results of the improvement and signal retiming/optimization yielded benefits mostly for the PM period. This was achieved by increasing the northbound/southbound split and modifying the left/through overlaps. As such, the overall LOS improved to D during the PM period with minor degradation to the southbound and westbound approaches.

Table 44 – Capacity Analysis – NW 79 Avenue and NW 58 Street

			EB				WB				NB				SB			Overall
			L	T	R	App	L	T	R	App	L	T	R	App	L	TR	App	
AM	Exist.	LOS	B	D	A	D	D	B	A	C	F	E	A	D	E	E	E	**C**
		Delay	19	40	10	37	45	11	0	21	98	77	9	41	60	55	57	**32**
	Modif.	LOS	B	D		D	D	B	A	C	D	D	A	C	E	E	E	**C**
		Delay	18	45		44	36	15	0	21	50	44	6	27	66	57	59	**32**
PM	Exist.	LOS	B	F	B	F	E	B	A	C	E	F	F	F	E	E	E	**F**
		Delay	13	89	13	83	58	17	0	27	66	192	150	151	60	57	58	**83**
	Modif.	LOS	B	E		D	E	C	A	C	D	D	C	D	F	E	E	**D**
		Delay	18	56		55	64	24	0	34	45	51	25	38	94	66	76	**46**

3.19.4. Recommendations

Based on the safety analysis, field observations and traffic operations for the intersection of NW 79 Avenue and NW 58 Street, the following is recommended:

- Converting the eastbound right turn lane to be a shared through and right-turn.
- Adding a third receiving lane to the eastbound movement.
- Retiming and optimizing the signal while maintaining cycle length for both the AM and PM peak hours.
- Removing the "Right Turn Lane Must Turn Right" sign (R3-7R) on eastbound approach.
- Installing new advance intersection lane use signs (R3-8) for both eastbound and westbound directions.
- Installing turn warning and "Signal Ahead" signs (W1-1 & W3-3) at southbound approach.
- Improving turning radius for both eastbound and westbound right turns.
- Improving roadway lighting.
- Pavement milling and resurfacing.
- Refurbishing of pavement markings and channelization guidelines.
- Trimming the trees at the southwest corner on NW 58 Street.

A conceptual vision of the proposed roadway improvements is exhibited in *Figure 77*.

24-hr Approach Counts

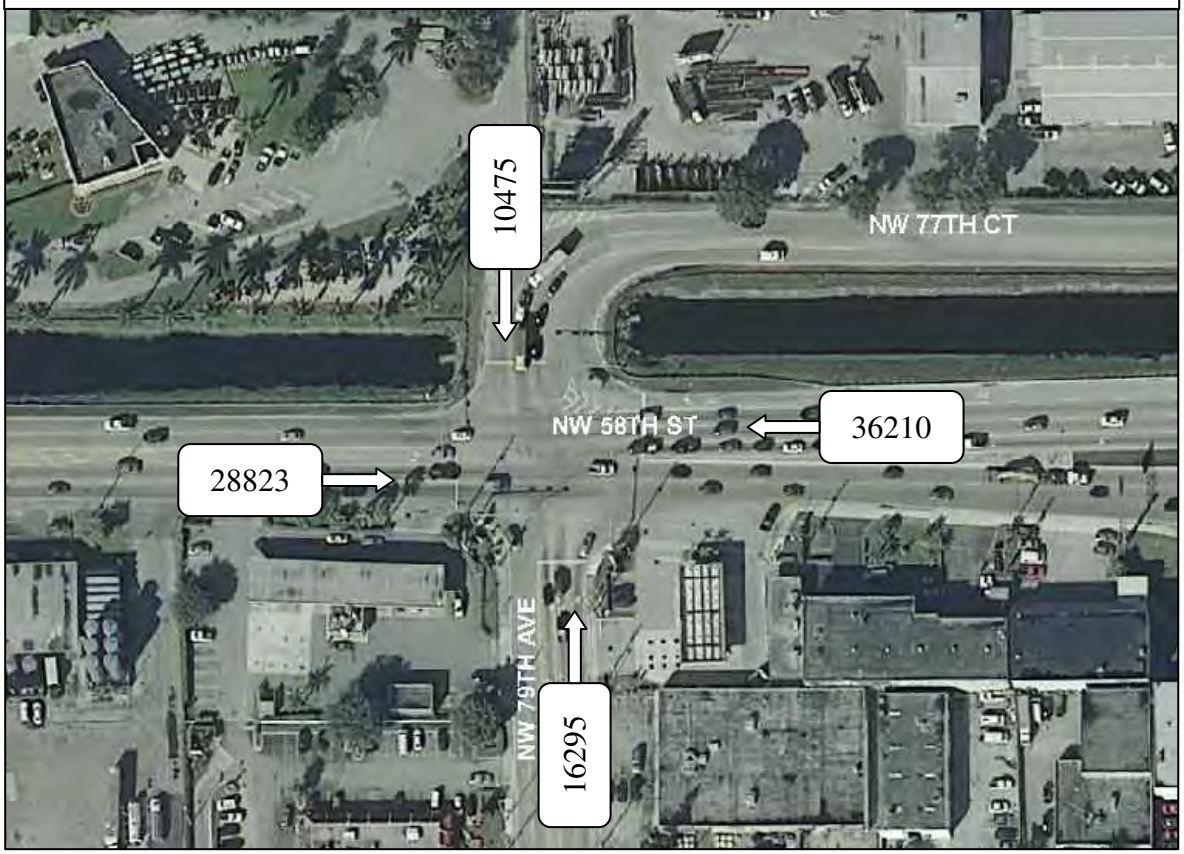

Turning Movement Counts (TMC)

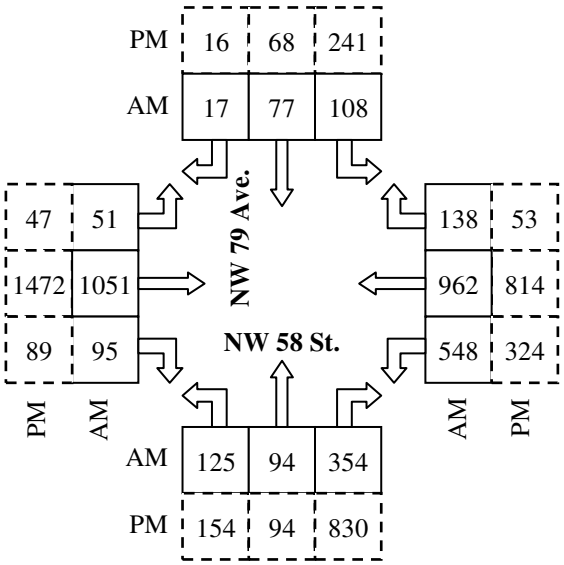

Figure 75: Traffic Data – *NW 79 Avenue and NW 58 Street*

Southeast corner: Wide recess presents a conflict to the right-turn movement.

Southbound approach: Lack of warning signs to alert motorists of approaching a curve and a signal.

Eastbound approach: Heavy through traffic.

Southwest corner: Tire marks on the sidewalks indicating a tight turn radius.

The intersection handles large number of heavy vehicles.

Faded pavement markings and deteriorated pavement conditions.

Figure 76: Field Review – *NW 79 Avenue and NW 58 Street*

Figure 77: Conceptual Plan – *NW 79 Avenue and NW 58 Street*

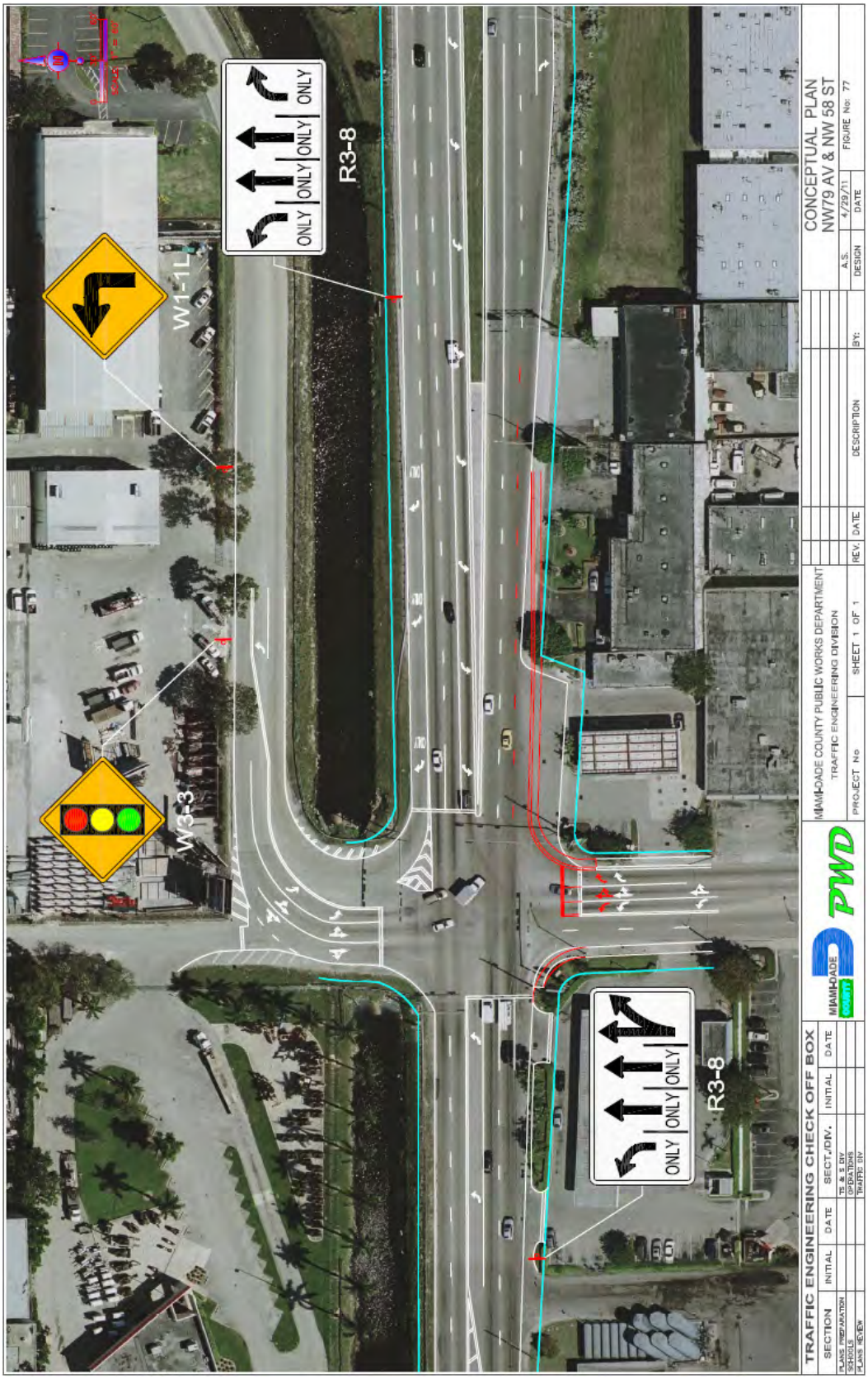

3.20. NW 107 Avenue and NW 41 Street

3.20.1. Site Description

This intersection is a signalized four legged intersection located in the southwest part of Miami Dade County in the City of Doral. NW 107 Avenue is a four lane urban arterial divided by a raised median that runs north-south, and NW 41 Street is a six lane urban arterial divided by a raised median that runs east-west.

3.20.2. Safety Conditions and Analysis

The intersection of NW 107 Avenue and NW 41 Street is ranked number 20 in our high crash locations list. A review of the hard copy police reports for the years 2006 through 2008 was performed. During the three-year analysis period, 96 relevant crashes occurred at the intersection. The analysis indicated that the average number of crashes per year is 32. The crash summaries, crash statistics and collision diagrams for the intersection are documented in *Appendix A*.

Based on the analysis of crash records for this intersection, the predominant types of crashes are shown in *Figure 78.*

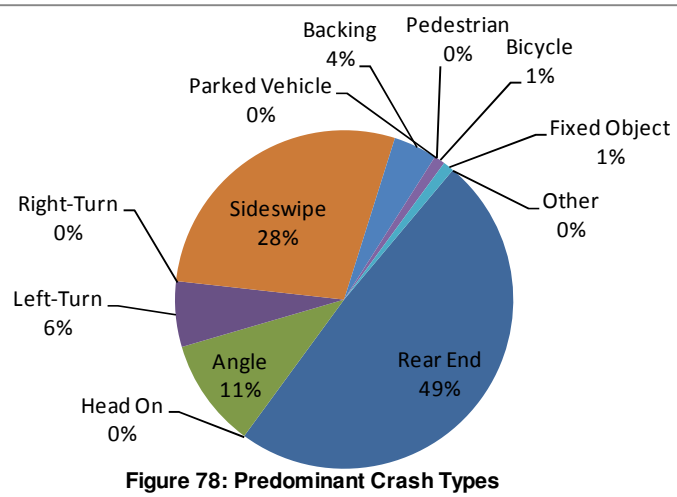

Figure 78: Predominant Crash Types NW 107 AVE & NW 41 ST

Calculated intersection mean crash per year were compared to the average Miami-Dade Crash Rate for County corridors to assess the safety conditions at the study intersection in relation to other roadways with similar traffic and geometric characteristics. This study is based on the 2007 FDOT's "Expected Value Analysis." *Table 45* illustrates the expected accident volume analysis of this intersection as well as the safety ratios and the confidence levels during the analysis period.

Based on a regression growth of 2% from the 2006 entering volume, the calculated safety ratios for the years 2006, 2007, and 2008 were 1.090, 1.165, and 1.336, respectively. The safety ratio for the three years averaged 1.197. Also, results of confidence level indicated that this intersection has been a high crash location during the three years with a confidence level higher than 99.95%.

From this analysis, it was determined that sideswipe and backing collisions presented abnormal crash patterns that exceed the threshold limits for the 95th percentile and 90th percentile confidence level. Those results indicate that these types of collisions were abnormally high during the period of 2006 through 2008. A detailed review of the abnormal crashes as well as probable countermeasures is presented in *Table 46*.

Table 45 – Crash Analysis – NW 107 Avenue and NW 41 Street

NW 107 Avenue & NW 41 street

(6 Lane x 4 Lane, Signalized, With Turn Lanes, 4 Leg Intersection-Divided-Table35) - URBAN Spot

	TYPE OF CRASH	NUMBER OF CRASHES YEAR 2006	2007	2008	3 YEAR TOTAL CRASHE	% of Total	MEAN Accidents per Year	EXPECTED ANNUAL CRASH VALUE MEAN	90th Percentile	95th Percentile	ABNORMALLY HIGH CRASHES Mean	90th Percentil	95th Percentil
COLLISION TYPE	Rear End	13	15	19	47	24%	15.67	8.68	17.26	18.90	X		
	Head On	0	0	0	0	0%	0.00	0.60	1.64	1.84			
	Angle	2	2	6	10	4%	3.33	5.40	9.19	9.92			
	Left Turn	2	2	2	6	3%	2.00	3.00	6.13	6.73			
	Right Turn	0	0	0	0	0%	0.00	0.46	1.36	1.53			
	Sideswipe	12	10	5	27	9%	9.00	2.58	4.92	5.37	X	X	X
	Backed Into	0	2	2	4	1%	1.33	0.28	0.84	0.94	X	X	X
	Coll. w/ Parked Car	0	0	0	0	0%	0.00	0.12	0.57	0.65			
	Coll. w/ Pedestrian	0	0	0	0	0%	0.00	0.74	1.80	2.00			
	Coll. w/ Bicycle	0	0	1	1	0%	0.33	0.14	0.49	0.55	X		
	Fixed Object	0	0	1	1	0%	0.33	0.79	2.01	2.24			
	Ran Off Road	0	0	0	0	0%	0.00	0.01	0.11	0.13			
	Overtuned	0	0	0	0	0%	0.00	0.04	0.28	0.33			
	Other	0	0	0	0	0%	0.00	8.67	21.05	23.42			
	Total Crashes	29	31	36	96	23%	32.00	31.51	54.94	59.43	X		
SEVERITY	PDO crashes	28	30	35	93	97%	31.00	19.21	36.95	40.35	X		
	Fatal crashes	0	0	0	0	0%	0.00	0.16	0.56	0.63			
	Injury crashes	1	1	1	3	3%	1.00	20.77	38.34	41.71			
LIGHT CONDITIONS	Day Light	25	27	26	78	81%	26.00	19.89	35.12	38.03	X		
	Dusk	0	0	1	1	1%	0.33	0.61	1.43	1.58			
	Dawn	0	1	3	4	4%	1.33	0.38	1.03	1.16	X	X	X
	Dark	4	3	6	13	14%	4.33	10.22	18.94	20.61			
	Unknown	0	0	0	0	0%	0.00	0.41	1.15	1.30			
SURFACE CONDITIONS	Dry	23	28	31	82	85%	27.33	26.41	45.71	49.41	X		
	Wet	1	3	5	9	9%	3.00	4.41	8.78	9.62			
	Others	5	0	0	5	5%	1.67	0.69	1.88	2.11	X		
MONTH OF A YEAR	January	4	4	3	11	11%	3.67	2.57	5.04	5.52	X		
	February	2	2	3	7	7%	2.33	2.37	4.59	5.02			
	March	4	5	3	12	13%	4.00	3.09	5.92	6.46	X		
	April	4	1	7	12	13%	4.00	2.57	5.30	5.82	X		
	May	1	5	4	10	10%	3.33	2.51.	4.81	5.25			
	June	1	3	3	7	7%	2.33	2.81	5.74	6.30			
	July	5	2	3	10	10%	3.33	2.60	4.96	5.42	X		
	August	1	0	3	4	4%	1.33	3.00	5.66	6.17			
	September	2	1	1	4	4%	1.33	2.48	4.92	5.39			
	October	3	2	3	8	8%	2.67	2.89	5.40	5.88			
	November	1	4	1	6	6%	2.00	2.41	4.85	5.32			
	December	1	2	2	5	5%	1.67	2.22	4.55	5.00			
DAY OF THE WEEK	Sunday	0	3	5	8	8%	2.67	4.00	6.58	7.08			
	Monday	2	5	6	13	14%	4.33	4.62	9.23	10.11			
	Tuesday	8	5	7	20	21%	6.67	4.46	7.81	8.46	X		
	Wednesday	3	2	5	10	10%	3.33	4.56	8.62	9.40			
	Thursday	10	8	2	20	21%	6.67	5.04	9.04	9.80	X		
	Friday	5	6	9	20	21%	6.67	4.86	9.39	10.26	X		
	Saturday	1	2	2	5	5%	1.67	3.98	8.10	8.89			
HOUR OF THE DAY	00:00-06:00	1	0	3	4	4%	1.33	3.79	8.65	9.58			
	06:00-09:00	2	4	4	10	10%	3.33	3.44	6.94	7.61			
	09:00-11:00	3	3	1	7	7%	2.33	2.58	5.30	5.82			
	11:00-13:00	5	8	3	16	17%	5.33	3.12	5.78	6.29	X		
	13:00-15:00	6	5	12	23	24%	7.67	3.57	6.32	6.85	X	X	X
	15:00-18:00	7	8	6	21	22%	7.00	6.38	11.52	12.50	X		
	18:00-24:00	5	3	7	15	16%	5.00	8.60	15.51	16.83			

	YEAR 1	2	3	3-Year Average
Average Daily Traffic ADT *(Vehicles per Day)*	65,538	66,875	68,240	66,884
Florida Average Crash rate *(Crashes per Million Entering Vehicles)*	0.579	0.568	0.566	0.571
Traffic Base	23.921	24.409	24.908	24.413
Actual Crash Rate *(Crashes per Million Entering Vehicles)*	1.212	1.270	1.445	1.309
Critical Crash Rate *(Crashes per Million Entering Vehicles)*	1.112	1.090	1.082	1.095
Safety Ratio	**1.090**	**1.165**	**1.336**	**1.197**
High Crash Location??	***YES***	***YES***	***YES***	***YES***

$$Actual\ \ Crash\ \ Rate = \frac{A \times 1{,}000{,}000}{V}$$

Where:
A = Total number of crashes or number of crashes by type occurring in a 1 year period.
V = Average Annual Daily Traffic X 365

$$CriticalCrashRate = AVR + \frac{0.5}{TB} + TF\sqrt{\frac{AVR}{TB}}$$

Where:
AVR = Average Statewide Crash Rate for a particular type of intersection or roadway segment.
TB = Traffic Base
TF = Test Factor (z-value)
= *1.96 (assume 95% Confidence Level for RURAL areas)*
= *3.29 (assume 99.95% Confidence Level for URBAN areas)*

$$Traffic\ Base = \frac{Years \times ADT \times 365}{1{,}000{,}000}$$

$$Safety\ \ Ratio = \frac{Actual\ \ Crash\ \ Rate}{Critical\ \ Crash\ \ Rate}$$

Confidence Level (%)	Constant Z
68.30	1.00
86.60	1.50
90.00	1.64
95.00	1.96
95.50	2.00
98.80	2.50
99.00	2.58
99.70	3.00
99.95	3.29

Table 46 – Abnormal Crash Details & Countermeasures NW 107 Avenue and NW 41 Street

NW 107 Avenue & NW 41 street

(6 Lane x 4 Lane, Signalized, With Turn Lanes, 4 Leg Intersection -Table 35) - URBAN Spot

			NUMBER OF CRASHES YEAR			3 YEAR TOTAL CRASHE	% of Total	MEAN Accidents per Year	Possible Cause(s)	Counter-measure(s)
			2006	2007	2008					
Sideswipe (Overtake)	Total Sideswipe Crashes		**12**	**10**	**5**	**27**	**100%**	**9.00**	(16)	20
	Lighting Conditions	Day Light	11	10	4	25	93%	8.33	(17)	21
		Dawn	0	0	0	0	0%	0.00	(19)	22
		Dark	1	0	1	2	7%	0.67	(20)	
	Hours of Day	00:00 - 06:00	0	0	0	0	0%	0.00		
		06:00 - 09:00	1	2	1	4	15%	1.33		
		09:00 - 11:00	1	0	0	1	4%	0.33		
		11:00 - 13:00	3	2	1	6	22%	2.00		
		13:00 - 15:00	1	2	2	5	19%	1.67		
		15:00 - 18:00	3	4	0	7	26%	2.33		
		18:00 - 24:00	3	0	1	4	15%	1.33		
	Direction	North	2	3	2	7	26%	2.33		
		South	2	2	1	5	19%	1.67		
		East	3	3	0	6	22%	2.00		
		West	5	2	2	9	33%	3.00		
		Unknown	0	0	0	0	0%	0.00		

			NUMBER OF CRASHES YEAR			3 YEAR TOTAL CRASHE	% of Total	MEAN Accidents per Year	Possible Cause(s)	Counter-measure(s)
			2006	2007	2008					
Backed into	Total Backed into Crashes		**0**	**2**	**2**	**4**	**100%**	**1.33**	(4)	6
	Lighting Conditions	Day Light	0	1	2	3	75%	1.00	(8)	21
		Dawn	0	0	0	0	0%	0.00	(19)	22
		Dark	0	1	0	1	25%	0.33		
	Hours of Day	00:00 - 06:00	0	1	0	1	25%	0.33		
		06:00 - 09:00	0	0	1	1	25%	0.33		
		09:00 - 11:00	0	0	0	0	0%	0.00		
		11:00 - 13:00	0	0	1	1	25%	0.33		
		13:00 - 15:00	0	0	0	0	0%	0.00		
		15:00 - 18:00	0	1	0	1	25%	0.33		
		18:00 - 24:00	0	0	0	0	0%	0.00		
	Direction	North	0	1	0	1	25%	0.33		
		South	0	1	1	2	50%	0.67		
		East	0	0	1	1	25%	0.33		
		West	0	0	0	0	0%	0.00		
		Unknown	0	0	0	0	0%	0.00		

3.20.3. Traffic Operation Conditions and Analysis

In order to identify the traffic operation characteristics and safety relevant conflicts, field observations at NW 107 Avenue and NW 41 Street were performed on a typical weekday on November 22, 2010. A summary of the traffic data is presented in *Figure 79*, and the field review is presented in *Figure 80*.

This intersection has double left-turn bays for all approaches, except the eastbound which has a single left-turn lane. The northbound approach has an exclusive right-turn lane. The signal operation is split phases for northbound and southbound traffic, protected for eastbound left-turns and protected/permissive for westbound left-turns.

Long queues were observed for southbound, eastbound and westbound left-turns with vehicles spilling back and blocking the through lanes. Also the eastbound left-turn movement struggles to cross the opposing westbound through movement.

Vehicles in/out of the median opening in the north leg present a conflict to the north/south through movements.

It was also observed that pedestrians find difficulty crossing NW 41 Street which has crosswalks only on the east leg of the intersection.

Northbound/southbound approaches are not properly aligned and receiving lanes are shifted to the left. Also, the northbound/southbound handles heavy traffic that affects the capacity.

Capacity analysis was conducted for AM and PM traffic peak hours to evaluate existing conditions as well as improvements. *Table 47* depicts the analysis performed using Synchro 6.0. An assessment of Level of Services (LOS) analysis for peak periods indicated that this intersection is operating at a failing LOS E during both of the AM and PM peaks. In addition, these analyses indicated that the northbound and southbound movements are operating under substantial delay that generates failing conditions (LOS E & F) during the AM and PM peak hours. Also, the analyses concluded that in addition to northbound, the eastbound is under failing condition (LOS E) during the AM peak.

The results of the improvement and signal retiming/optimization yielded benefits for both AM and PM periods. This was achieved by adding lanes and changing lane assignment of the northbound and southbound approaches. Also, changing the current half quad north/south split phase to a full quad, and optimizing the signal while maintaining cycle length for both the AM and PM peak hours. As such, the overall LOS improved to D during AM and PM, and the overall and the approaches delays were improved.

Table 47 – Capacity Analysis – NW 107 Avenue and NW 41 Street

			EB			WB			NB				SB				Overall
			L	TR	App	L	TR	App	L	T	R	App	L	T	R	App	
AM	Exist.	LOS	B	D	D	F	C	D	E	F	E	F	F	F		F	**E**
		Delay	16	46	44	110	23	50	75	112	80	94	144	135		138	**72**
	Modif.	LOS	B	D	D	F	C	D	E	E	D	E	F	E	B	E	**D**
		Delay	17	49	47	88	21	42	70	66	39	56	88	73	12	72	**52**
PM	Exist.	LOS	F	D	E	E	D	D	F	F	C	F	D	E		E	**E**
		Delay	130	38	57	72	45	50	130	122	27	103	54	60		58	**67**
	Modif.	LOS	D	C	D	E	D	D	E	D	B	D	E	E	A	D	**D**
		Delay	47	35	37	64	47	50	56	47	15	43	68	59	8	52	**46**

3.20.4. Recommendations

Based on the safety analysis, field observations and traffic operations for the intersection of NW 107 Avenue and NW 41 Street, the following is recommended:

- Changing the lane configuration of the southbound approach by adding two lanes to become L, L, T, T & R instead of L, LT & TR. *This improvement will require additional right-of-way.*
- Changing the lane configuration of the northbound approach to become L, L, T, T & R instead of L, LT, T & R.
- Changing the current half quad north/south split phase to a full quad, and optimizing the signal while maintaining cycle length for both the AM and PM peak hours.
- Lengthen the eastbound left-turn lane to approximately 400 ft.
- Lengthen the westbound outside left-turn lane to approximately 500 ft.
- Lengthen the proposed southbound left-turn lanes to approximately 350 ft. each.
- Closing of the median opening in front of CVS driveway on the north leg.
- Adding more green time to pedestrians crossing NW 41 Street.
- Provide crosswalks and ADA approved pedestrian ramps on the west leg to cross NW 41 Street.
- Install 40 mph speed limit signs (R2-1) in all receiving directions.
- Pavement milling and resurfacing.
- Refurbishing of pavement marking and channelization guidelines.

A conceptual vision of the proposed roadway improvements is exhibited in *Figure 81*.

24-hr Approach Counts

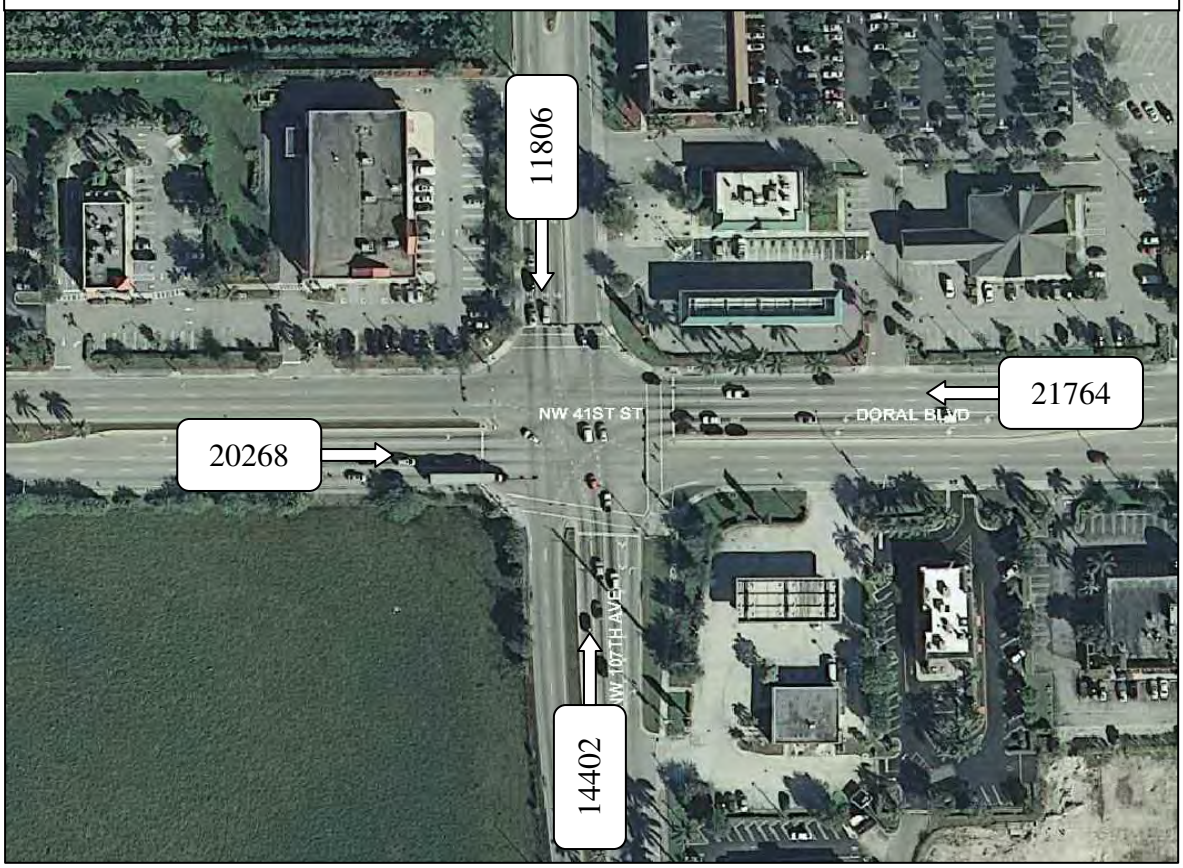

Turning Movement Counts (TMC)

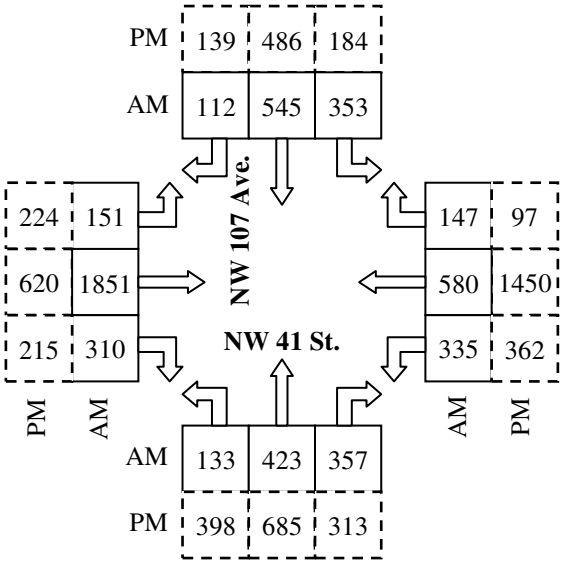

Figure 79: Traffic Data – *NW 107 Avenue and NW 41 Street*

Southbound approach: Heavy traffic exceeds the capacity.

North/South: Road is not properly aligned with an offset to the left.

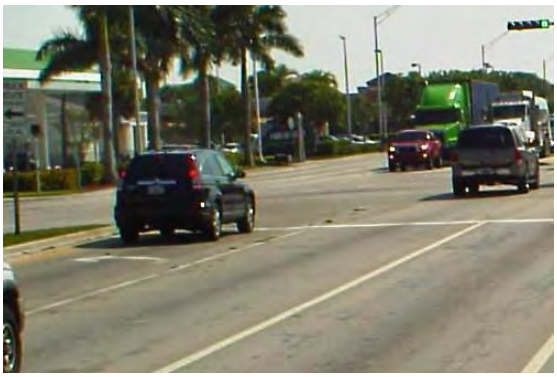

Eastbound approach: Offset and trucks make it difficult for left-turn vehicles to cross the opposite traffic.

Eastbound approach: Red light running.

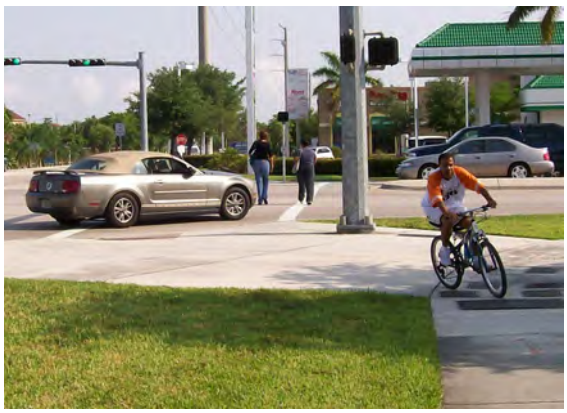

East leg: Pedestrians find it difficult to cross long crosswalk with insufficient time.

Westbound approach: Tire skid marks.

Figure 80: Field Review – *NW 107 Avenue and NW 41 Street*
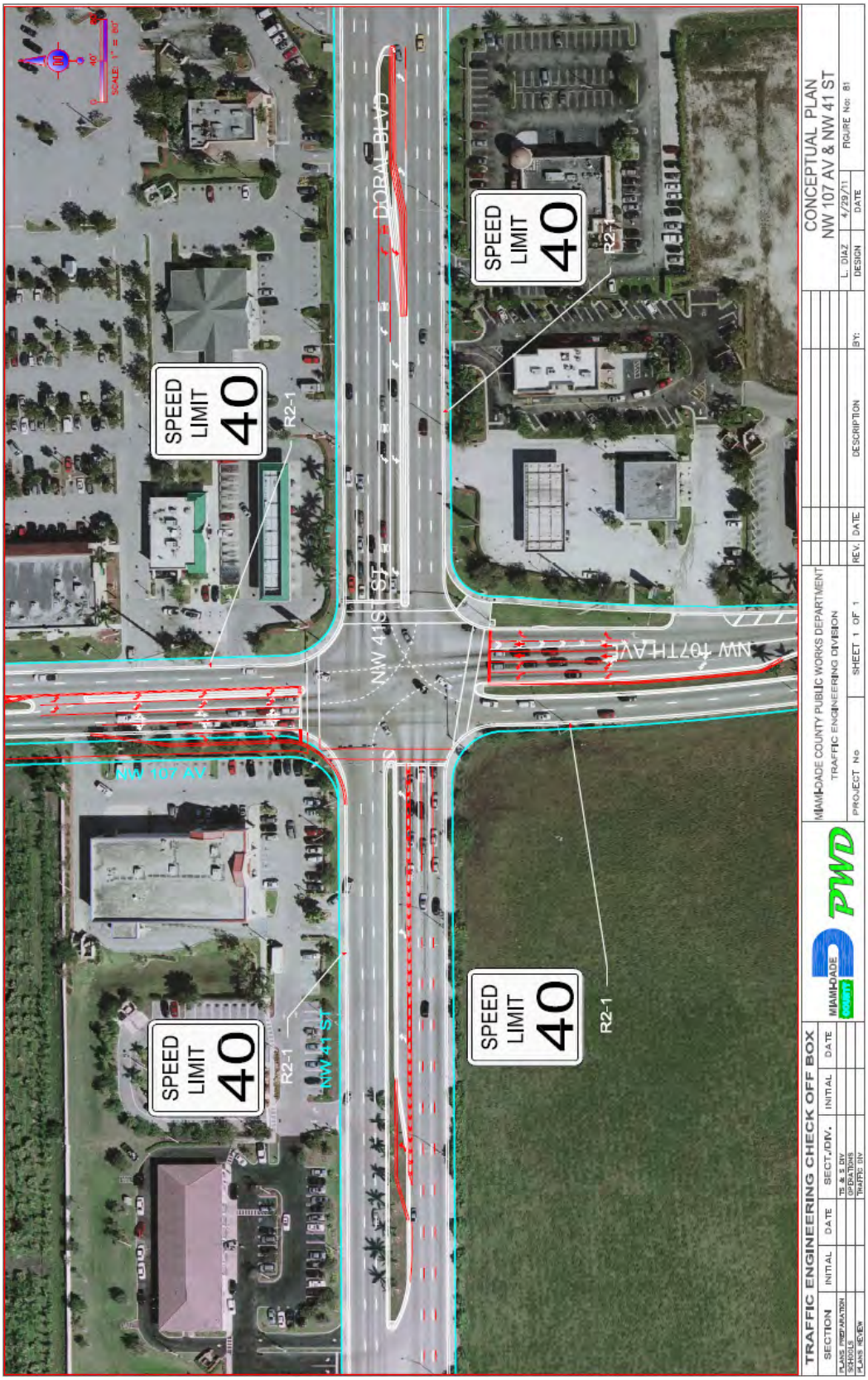
Figure 81: Conceptual Plan – *NW 107 Avenue and NW 41 Street*